SUZUKI

SV650

SERVICE MANUAL

99500-36091-03E
(英)

SUZUKI MOTOR CORPORATION PRINTED IN JAPAN DECEMBER, '98 (TK)

FOREWORD

This manual contains an introductory description on the SUZUKI SV650 and procedures for its inspection/service and overhaul of its main components. Other information considered as generally known is not included.
Read the GENERAL INFORMATION section to familiarize yourself with the motorcycle and its maintenance. Use this section as well as other sections to use as a guide for proper inspection and service. This manual will help you know the motorcycle better so that you can assure your customers of fast and reliable service.

- *This manual has been prepared on the basis of the latest specifications at the time of publication. If modifications have been made since then, differences may exist between the content of this manual and the actual motorcycle.*
- *Illustrations in this manual are used to show the basic principles of operation and work procedures. They may not represent the actual motorcycle exactly in detail.*
- *This manual is written for persons who have enough knowledge, skills and tools, including special tools, for servicing SUZUKI motorcycles. If you do not have the proper knowledge and tools, ask your authorized SUZUKI motorcycle dealer to help you.*

⚠ WARNING

Inexperienced mechanics or mechanics without the proper tools and equipment may not be able to properly perform the services described in this manual. Improper repair may result in injury to the mechanic and may render the motorcycle unsafe for the rider and passenger.

IMPORTANT

All street-legal Suzuki motorcycles with enjine displacement of 50 cc or greater are subject to Environmental Protection Agency emission regulations. These regulations set specific standards for exhaust emission output levels as well as particular srevicing requirements. This manual includes specific information required to properly inspect and service SV650 in accordance with all EPA regulations. It is strongly recommended that the chapter on Emission Control, Periodic Servicing and Carburetion be thoroughly reviewed before any type of service work is performed. Further information concerning the EPA emission regulations and U.S Suzuki's emission control program can be found in the U.S SUZUKI EMISSION CONTROL PROGRAM MANUAL/SERVICE BULLETIN.

GROUP INDEX

GENERAL INFORMATION	1
PERIODIC MAINTENANCE	2
ENGINE	3
FUEL AND LUBRICATION SYSTEM	4
COOLING SYSTEM	5
CHASSIS	6
ELECTRICAL SYSTEM	7
SERVICING INFORMATION	8
EMISSION CONTROL INFORMATION	9
SV650Y ('00-MODEL)	10

SUZUKI MOTOR CORPORATION
Motorcycle Service Department

© COPYRIGHT SUZUKI MOTOR CORPORATION 1998

HOW TO USE THIS MANUAL

TO LOCATE WHAT YOU ARE LOOKING FOR:

1. The text of this manual is divided into sections.
2. The section titles are listed in the GROUP INDEX.
3. Holding the manual as shown at the right will allow you to find the first page of the section easily.
4. The contents are listed on the first page of each section to help find the item and page you need.

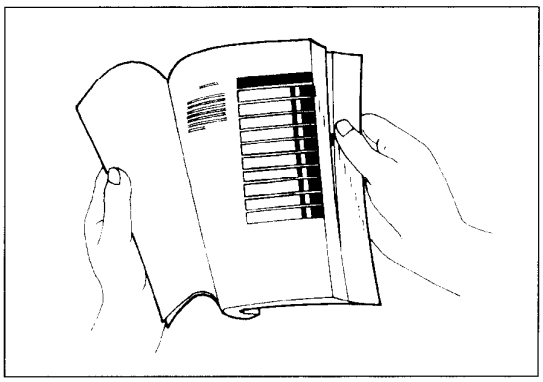

COMPONENT PARTS AND WORK TO BE DONE

Under the name of each system or unit, is its exploded view. Work instructions and other service information such as the tightening torque, lubricating points and locking agent points, are provided.

Example: Front wheel

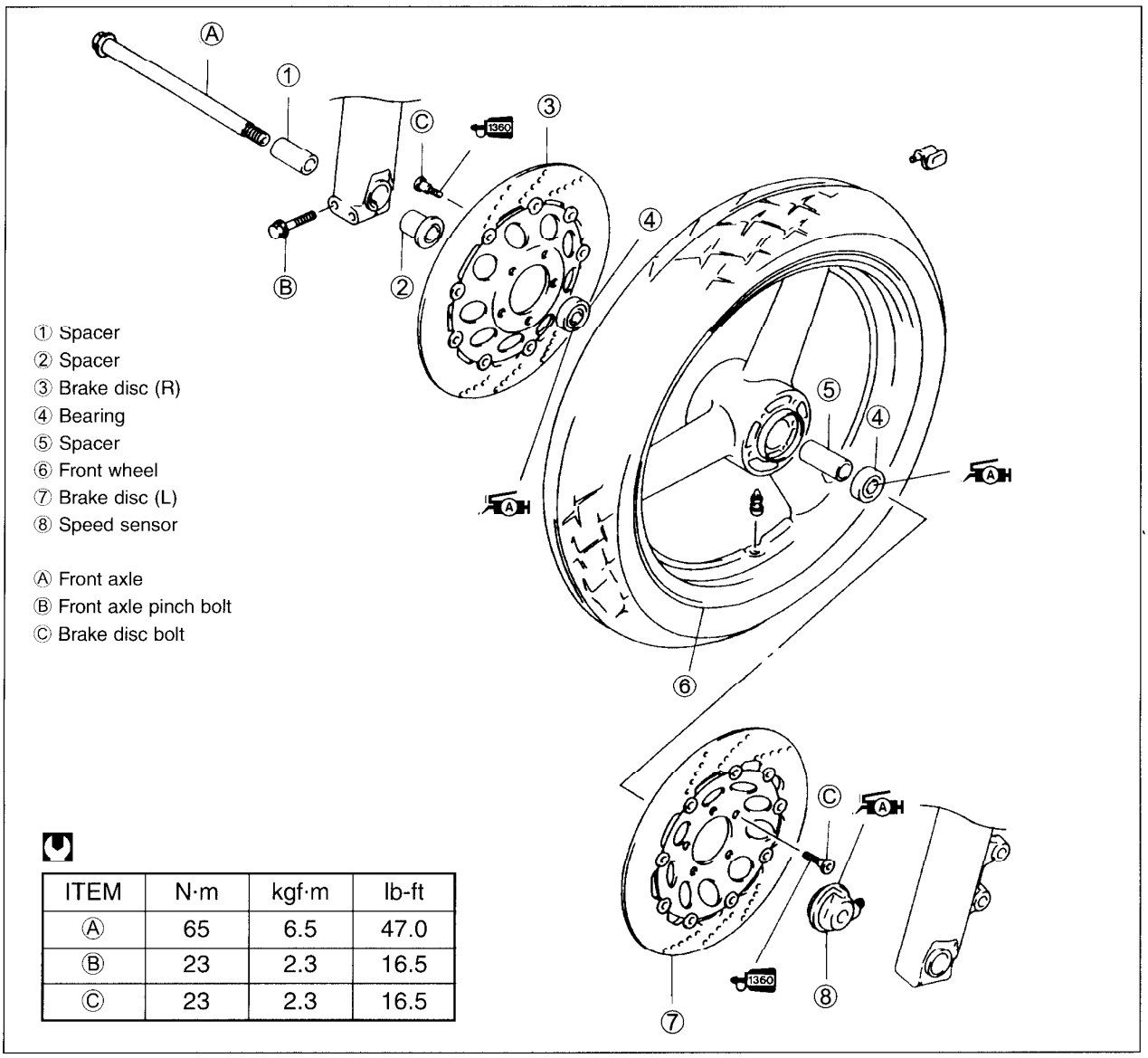

① Spacer
② Spacer
③ Brake disc (R)
④ Bearing
⑤ Spacer
⑥ Front wheel
⑦ Brake disc (L)
⑧ Speed sensor

Ⓐ Front axle
Ⓑ Front axle pinch bolt
Ⓒ Brake disc bolt

ITEM	N·m	kgf·m	lb-ft
Ⓐ	65	6.5	47.0
Ⓑ	23	2.3	16.5
Ⓒ	23	2.3	16.5

SYMBOL

Listed in the table below are the symbols indicating instructions and other information necessary for servicing. The meaning of each symbol is also included in the table.

SYMBOL	DEFINITION	SYMBOL	DEFINITION
	Torque control required. Data beside it indicates specified torque.	LLC	Use engine coolant.
OIL	Apply oil. Use engine oil unless otherwise specified.	FORK	Use fork oil. 99000-99044-10G
M/O	Apply molybdenum oil solution. (Mixture of engine oil and SUZUKI MOLY PASTE in a ratio of 1:1)	BF	Apply or use brake fluid.
A	Apply SUZUKI SUPER GREASE "A". 99000-25030	V	Measure in voltage range.
S	Apply SUZUKI SILICONE. GREASE 99000-25100	A	Measure in current range.
M	Apply SUZUKI MOLY PASTE. 99000-25140		Measure in diode test range.
1207B	Apply SUZUKI BOND "1207B". 99104-31140		Measure in continuity test range.
1303	Apply THREAD LOCK SUPER "1303". 99000-32030	TOOL	Use special tool.
1342	Apply THREAD LOCK "1342". 99000-32050	DATA	Indication of service data.
1360	Apply THREAD LOCK SUPER "1360". 99000-32130		

GENERAL INFORMATION

1

CONTENTS

WARNING/CAUTION/NOTE 1- 2
GENERAL PRECAUTIONS 1- 2
SUZUKI SV650X ('99-MODEL) 1- 4
SERIAL NUMBER LOCATION 1- 4
FUEL, OIL AND ENGINE COOLANT RECOMMENDATION 1- 5
FUEL 1- 5
ENGINE OIL 1- 5
BRAKE FLUID 1- 5
FRONT FORK OIL 1- 5
ENGINE COOLANT 1- 6
WATER FOR MIXING 1- 6
ANTI-FREEZE/ENGINE COOLANT 1- 6
LIQUID AMOUNT OF WATER/ENGINE COOLANT 1- 6
BREAK-IN PROCEDURES 1- 6
CYLINDER IDENTIFICATION 1- 6
INFORMATION LABELS 1- 7
SPECIFICATIONS 1- 8
COUNTRY AND AREA CODES 1-10

WARNING/CAUTION/NOTE

Please read this manual and follow its instructions carefully. To emphasize special information, the symbol and the words WARNING, CAUTION and NOTE have special meanings. Pay special attention to the messages highlighted by these signal words.

⚠ WARNING

Indicates a potential hazard that could result in death or injury.

⚠ CAUTION

Indicates a potential hazard that could result in motorcycle damage.

NOTE:

Indicates special information to make maintenance easier or instructions clearer.

Please note, however, that the warnings and cautions contained in this manual cannot possibly cover all potential hazards relating to the servicing, or lack of servicing, of the motorcycle. In addition to the WARNINGS and CAUTIONS stated, you must use good judgement and basic mechanical safety principles. If you are unsure about how to perform a particular service operation, ask a more experienced mechanic for advice.

GENERAL PRECAUTIONS

⚠ WARNING

- **Proper service and repair procedures are important for the safety of the service mechanic and the safety and reliability of the motorcycle.**
- **When 2 or more persons work together, pay attention to the safety of each other.**
- **When it is necessary to run the engine indoors, make sure that exhaust gas is forced outdoors.**
- **When working with toxic or flammable materials, make sure that the area you work in is well-ventilated and that you follow all of the material manufacturer's instructions.**
- **Never use gasoline as a cleaning solvent.**
- **To avoid getting burned, do not touch the engine, engine oil, radiator and exhaust system until they have cooled.**
- **After servicing the fuel, oil, engine coolant, exhaust or brake systems, check all lines and fittings related to the system for leaks.**

▲ CAUTION

* If parts replacement is necessary, replace the parts with Suzuki Genuine Parts or their equivalent.
* When removing parts that are to be reused, keep them arranged in an orderly manner so that they may be reinstalled in the proper order.
* Be sure to use special tools when instructed.
* Make sure that all parts used in reassembly are clean. Lubricate them when specified.
* Use the specified lubricant, bond, or sealant.
* When removing the battery, disconnect the negative cable first and then the positive cable.
* When reconnecting the battery, connect the positive cable first and then the negative cable, and cover the positive terminal with the terminal cover.
* When performing service to electrical parts, disconnect the battery negative cable unless the service procedure requires the battery power.
* When tightening cylinder head and crankcase bolts and nuts, tighten the larger sizes first. Always tighten the bolts and nuts diagonally from the inside working out and to the specified tightening torque.
* Whenever you remove oil seals, gaskets, packing, O-rings, locking washers, self-locking nuts, cotter pins, circlips, and certain other parts as specified, be sure to replace them with new ones. Also, before installing these new parts, be sure to remove any left over material from the mating surfaces.
* Never reuse a circlip. When installing a new circlip, take care not to expand the end gap larger than required to slip the circlip over the shaft. After installing a circlip, always ensure that it is completely seated in its groove and securely fitted.
* Use a torque wrench to tighten fasteners to the specified torque. Wipe off grease and oil if a thread is smeared with them.
* After reassembling, check parts for tightness and proper operation.

* To protect the environment, do not unlawfully dispose of used motor oil, engine coolant and other fluids: batteries, and tires.
* To protect the earth's natural resources, properly dispose of used motorcycles and parts.

SUZUKI SV650X ('99-MODEL)

RIGHT SIDE

LEFT SIDE

* Difference between photograph and actual motorcycle depends on the markets.

SERIAL NUMBER LOCATION

The frame serial number or V.I.N. (Vehicle Identification Number) Ⓐ is stamped on the right side of the steering head pipe. The engine serial number Ⓑ is located on the left side of the crankcase. These numbers

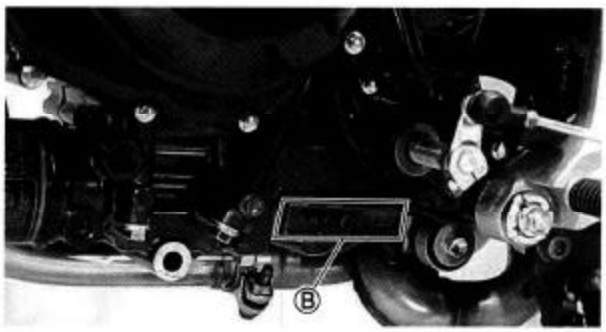

FUEL, OIL AND ENGINE COOLANT RECOMMENDATION

FUEL (For U.S.A. model)

1. Use only unleaded gasoline of at least 87 pump octane ($\frac{R+M}{2}$) method or 91 octane or higher rated by the research method.
2. Suzuki recommends that customers use alcohol free, unleaded gasoline whenever possible.
3. Use of blended gasoline containing MTBE (Methyl Tertiary Butyl Ether) is permitted.
4. Use of blended gasoline/alcohol fuel is permitted, provided that the fuel contains not more than 10% ethanol. Gasoline/alcohol fuel may contain up to 5% methanol if appropriate cosolvents and corrosion inhibitors are present in it.
5. If the performance of the vehicle is unsatisfactory while using blended gasoline/alcohol fuel, you should switch to alcohol-free unleaded gasoline.
6. Failure to follow these guideline could possibly void applicable warranty coverage. Check with your fuel supplier to make sure that the fuel you intend to use meets the requirements listed above.

ENGINE OIL

SUZUKI recommends the use of SUZUKI PERFORMANCE 4 MOTOR OIL or an oil which is rated SF or SG under the API (American Petroleum Institute) service classification. The recommended viscosity is SAE 10W/40. If an SAE 10W/40 oil is not available, select and alternative according to the right chart.

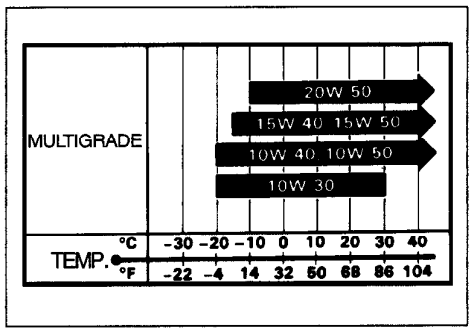

BRAKE FLUID

Use DOT4 brake fluid.

⚠ WARNING

Since the brake system of this motorcycle is filled with a glycol-based brake fluid by the manufacturer, do not use or mix different types of fluid such as silicone-based and petroleum-based fluid for refilling the system, otherwise serious damage will result.
Do not use any brake fluid taken from old or used or unsealed containers.
Never re-use brake fluid left over from a previous servicing, which has been stored for a long period.

FRONT FORK OIL

Use SUZUKI FORK OIL G10 or an equivalent fork oil.

ENGINE COOLANT

Use an anti-freeze/engine coolant compatible with an aluminum radiator, mixed with distilled water only.

WATER FOR MIXING

Use distilled water only. Water other than distilled water can corrode and clog the aluminum radiator.

ANTI-FREEZE/ENGINE COOLANT

The engine coolant perform as a corrosion and rust inhabit as well as anti-freeze. Therefore, the engine coolant should be used at all times even though the atmospheric temperature in your area does not go down to freezing point.

LIQUID AMOUNT OF WATER/ENGINE COOLANT

Solution capacity (total): 1 600 ml (1.7/1.4 US/Imp qt)

For engine coolant mixture information, refer to cooling system section. (☞ 5-2)

⚠ CAUTION

Mixing of anti-freeze/engine coolant should be limited to 60%. Mixing beyond it would reduce its efficiency. If the anti-freeze/engine coolant mixing ratio is below 50%, rust inhabiting performance is greatly reduced. Be sure to mix it above 50% even though the atmospheric temperature does not go down to the freezing point.

BREAK-IN PROCEDURES

During manufacture only the best possible materials are used and all machined parts are finished to a very high standard but it is still necessary to allow the moving parts to "BREAK-IN" before subjecting the engine to maximum stresses. The future performance and reliability of the engine depends on the care and restraint exercised during its early life. The general rules are as follows.

- Keep to these break-in procedures:

Initial	**800 km (500 miles):**	**Below**	**5 000 r/min**
Up to	**1 600 km (1 000 miles):**	**Below**	**8 000 r/min**
Over to	**1 600 km (1 000 miles):**	**Below**	**10 500 r/min**

- Upon reaching an odometer reading of 1 600 km (1 000 miles) you can subject the motorcycle to full throttle operation. However, do not exceed 11 000 r/min at any time.

CYLINDER IDENTIFICATION

The two cylinders of this engine are identified as No.1 and No.2 cylinder, as viewed from front to rear (as viewed by the rider on the seat).

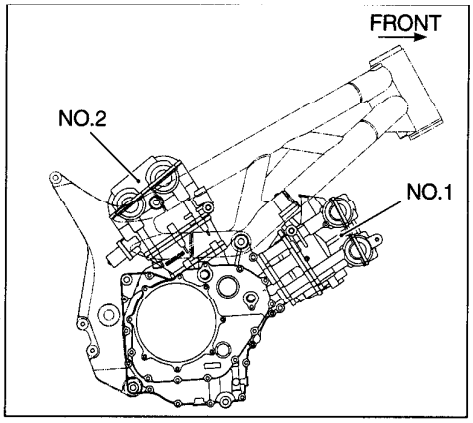

INFORMATION LABELS

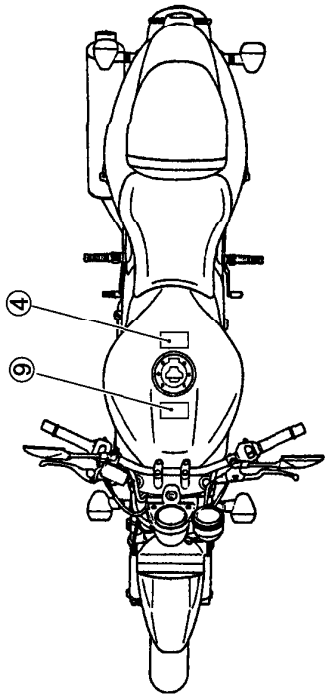

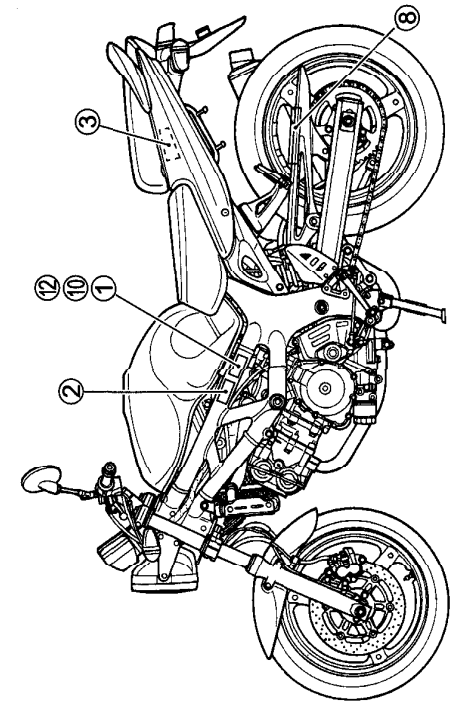

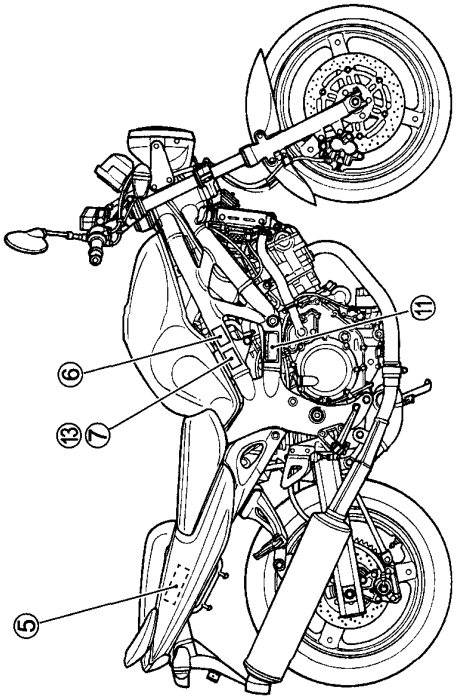

① Noise label (For E-03, 24, 33, 34)
② Information label (For E-03, 28, 33)
③ Vacuum hose routing label (For E-33)
④ Fuel caution label (For E-02, 24)
⑤ Manual notice label (For E-03, 33)
⑥ Frame caution label (For E-03, 28, 33)
⑦ Frame caution label (Except for E-03, 28, 33)
⑧ Tire pressure label
⑨ Warning safety label
⑩ ICES Canada label (For E-28)
⑪ ID plate (Except for E-03, 28, 33)
⑫ ID plate (For E-18)
⑬ Safety plate (For E-03, 28, 33)

SPECIFICATIONS

DIMENSIONS AND DRY MASS

Overall length	2 070 mm (81.5 in)
Overall width	750 mm (29.5 in)
Overall height	1 060 mm (41.7 in)
Wheelbase	1 430 mm (56.3 in)
Ground clearnce	140 mm (5.5 in)
Seat height	805 mm (31.7 in)
Dry mass	165 kg (363 lbs)

ENGINE

Type	Four-stroke, Liquid-cooled, DOHC, TSCC, 90-degree V-twin
Number of cylinders	2
Tappet clearance, IN	0.10 – 0.20 mm (0.004 – 0.008 in)
EX	0.20 – 0.30 mm (0.008 – 0.012 in)
Bore	81.0 mm (3.189 in)
Stroke	62.6 mm (2.465 in)
Piston displacement	645 cm^3 (39.4 cu. in)
Compression ratio	11.5 : 1
Carburetor	MIKUNI BDSR39 × 2
Air cleaner	Non-woven fabric element
Starter system	Electric starter
Lubrication system	Wet sump

TRANSMISSION

Clutch	Wet multi-plate type
Transmission	6-speed constant, mesh
Gearshift pattern	1-down, 5-up
Primary reduction ratio	2.088 (71/34)
Gear ratios, Low	2.461 (32/13)
2nd	1.777 (32/18)
3rd	1.380 (29/21)
4th	1.125 (27/24)
5th	0.961 (25/26)
Top	0.851 (23/27)
Final reduction ratio	3.000 (45/15)
Drive chain	D.I.D 525 V8, 110 links

CHASSIS

Front suspension	Telescopic, coil spring, oil damped
Rear suspension	Link type system, gas/oil damped, coil spring
Front fork stroke	130 mm (5.1 in)
Rear wheel travel	125 mm (4.9 in)
Steering angle	33° (right & left)
Caster	25°
Trail	100 mm (3.94 in)
Turning radius	2.9 m (9.5 ft)
Front brake	Disc brake, twin hydraulically operated
Rear brake	Disc brake, hydraulically operated
Front tire size	120/60 ZR17 (55 W), tubeless
Rear tire size	160/60 ZR17 (69 W), tubeless

ELECTRICAL

Ignition type	Electronic ignition (Transistorized)
Ignition timing	5° B.T.D.C. at 1 300 r/min
Spark plug	NGK CR8E, DENSO U24ESR-N
Battery	12V 36.0 kC(10 Ah)/10HR
Generator	Three-phase A.C. Generator
Main fuse	30A
Fuse	15/15/15/10/10A
Headlight	12V 60/55W
Turn signal light	12V 21W
Brake light/Taillight	12V 21/5W × 2
License plate light	12V 5W
Speedometer light	12V 1.7W × 2
Neutral indicator light	12V 1.7W
High beam indicator light	12V 1.7W
Turn signal indicator light	12V 1.7W
Oil pressure indicator light	12V 1.7W

CAPACITIES

Fuel tank, including reserve	16.0 L (4.2/3.5 US/Imp gal)
	15.0 L (4.0/3.3 US/Imp gal) ..... Only for E-33
Engine oil, oil change	2 300 ml (2.4/2.0 US/Imp qt)
with filter change	2 400 ml (2.5/2.1 US/Imp qt)
overhaul	2 700 ml (2.9/2.4 US/Imp qt)
Coolant	1 600 ml (1.7/1.4 US/Imp qt)

These specifications are subject to change without notice.

COUNTRY AND AREA CODES

The following codes stand for the applicable country(-ies) and area(-s).

CODE	COUNTRY or AREA
E-02	U.K.
E-03	USA (Except for california)
E-04	France
E-17	Sweden, Finland (E-15), Norway (E-16)
E-18	Switzerland, Austria (E-39)
E-22	Germany
E-24	Australia
E-25	Netherlands
E-28	Canada
E-33	California (USA)
E-34	Italy, Belgium (E-21), Spain (E-53)

PERIODIC MAINTENANCE

2

CONTENTS

PERIODIC MAINTENANCE SCHEDULE 2- 2
PERIODIC MAINTENANCE CHART 2- 2
LUBRICATION POINTS 2- 3
MAINTENANCE AND TUNE-UP PROCEDURES 2- 4
AIR CLEANER 2- 4
SPARK PLUG 2- 5
TAPPET CLEARANCE 2- 8
ENGINE OIL AND OIL FILTER 2-13
FUEL HOSE 2-15
ENGINE IDLE SPEED 2-15
CARBURETOR SYNCHRONIZATION 2-15
THROTTLE CABLE PLAY 2-16
CLUTCH 2-17
COOLING SYSTEM 2-18
DRIVE CHAIN 2-20
BRAKE 2-22
TIRE 2-25
STEERING 2-26
FRONT FORK 2-27
REAR SUSPENSION 2-27
EXHAUST PIPE BOLT AND NUT 2-27
CHASSIS BOLT AND NUT 2-28
COMPRESSION PRESSURE CHECK 2-30
OIL PRESSURE CHECK 2-31

PERIODIC MAINTENANCE SCHEDULE

IMPOTANT: The periodic maintenance intervals and service requirements have been established in accordance with EPA regulations. Following these instructions will ensure that the motorcycle will not exceed emission standards and it will also ensure the reliability and performance of the motorcycle.
The chart below lists the recommended intervals for all the required periodic service work necessary to keep the motorcycle operating at peak performance and economy. Maintenance intervals are expressed in terms of kilometer, miles and months, and are dependant on whichever comes first.

NOTES:
More frequent servicing may be performed on motorcycles that are used under severe conditions.

PERIODIC MAINTENANCE CHART

Interval / Item	km	1 000	6 000	12 000	18 000	24 000
	miles	600	4 000	7 500	11 000	15 000
	months	1	6	12	18	24
Air cleaner		-	I	I	R	I
Spark plugs		-	I	R	I	R
Tappet clearance		-	-	-	-	I
Engine oil		R	R	R	R	R
Engine oil filter		R	-	-	R	-
Fuel hose		-	I	I	I	I
		Replace every 4 years.				
Engine idle speed		I	I	I	I	I
Carburetor synchronization		I (E-33 only)	-	I	-	I
Evaporative emission control system (E-33 only)		-	-	I	-	I
		Replace vapor hose every 4 years.				
PAIR (air supply) system (E-33 only)		-	-	I	-	I
Throttle cable play		I	I	I	I	I
Clutch cable play		-	I	I	I	I
Radiator hoses		-	I	I	I	I
Engine coolant		Replace every 2 years				
Drive chain		I	I	I	I	I
		Clean and lubricate every 1 000 km (600 miles).				
Brakes		I	I	I	I	I
Brake hoses		-	I	I	I	I
		Replace every 4 years.				
Brake fluid		-	I	I	I	I
		Replace every 2 years.				
Tire		-	I	I	I	I
Steering		I	-	I	-	I
Front forks		-	-	I	-	I
Rear suspension		-	-	I	-	I
Exhaust pipe bolt and nut		T	-	T	-	T
Chassis bolt and nuts		T	T	T	T	T

I = Inspect and adjust, clean, lubricate or replace as necessary.
R = Replace
T = Tighten

LUBRICATION POINTS

Proper lubrication is important for smooth operation and long life of each working part of the motorcycle. Major lubrication points are indicated below.

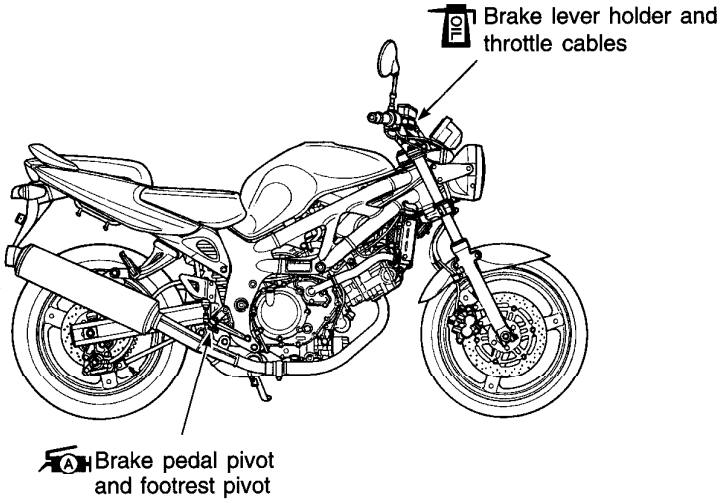

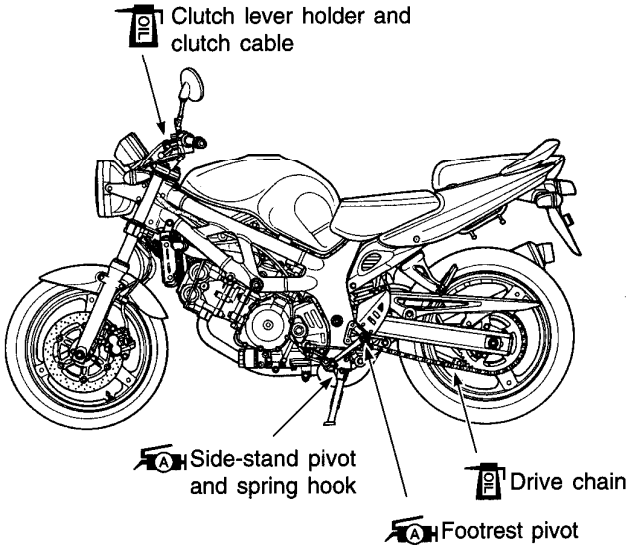

NOTE:

* *Before lubricating each part, clean off any rusty spots and wipe off any grease, oil, dirt or grime.*
* *Lubricate exposed parts which are subject to rust, with a rust preventative spray, especially whenever the motorcycle has been operated under wet or rainy conditions.*

MAINTENANCE AND TUNE-UP PROCEDURES

This section describes the servicing procedures for each item mentioned in the Periodic Maintenance chart.

AIR CLEANER

Inspect every 6 000 km (4 000 miles, 6 months) and replace every 18 000 km (11 000 miles, 18 months).

- Remove the front and rear seats. (☞ 6-3)
- Lift and support the fuel tank. (☞ 4-4)

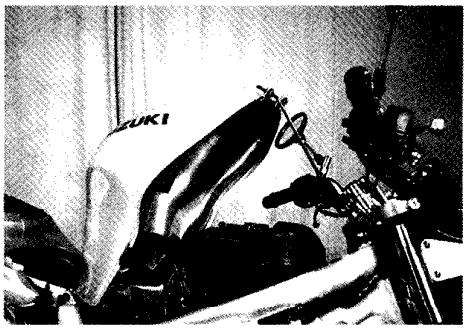

- Remove the air cleaner element ① by removing the screws.

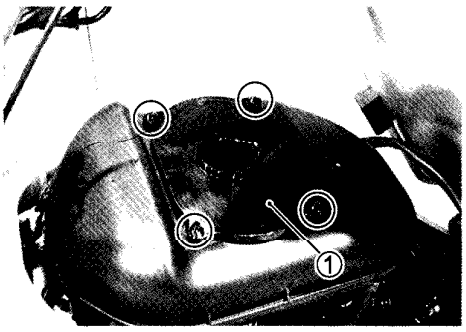

- Carefully use air hose to blow the dust from the cleaner element.

⚠ CAUTION

Always use air pressure on the outside of the air cleaner element. If air pressure is used on the inside, dirt will be forced into the pores of the air cleaner element thus restricting air flow through the air cleaner element.

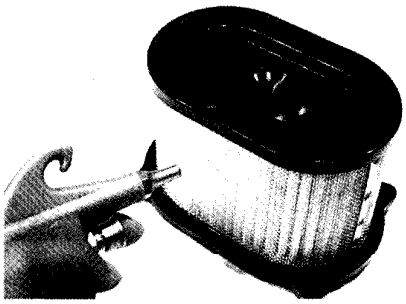

- Reinstall the cleaned or new air cleaner element in the reverse order of removal.

⚠ CAUTION

If driving under dusty conditions, clean the air cleaner element more frequently. The surest way to accelerate engine wear is to operate the engine without the element or to use a torn element. Make sure that the air cleaner is in good condition at all times. The life of the engine depends largely on this component!

- Remove the drain plugs (① and ②) from the air cleaner drain hose and air cleaner box to allow any water to drain out.

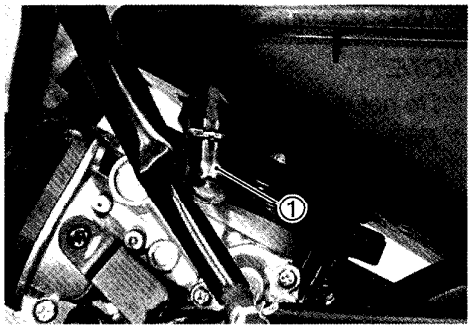

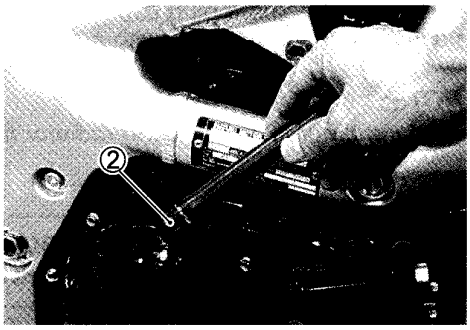

SPARK PLUG

Inspect every 6 000 km (4 000 miles, 6 months) and replace every 12 000 km (7 500 miles, 12 months).

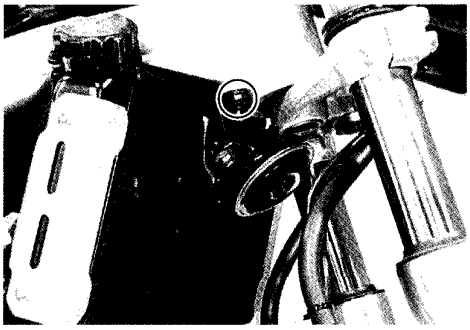

NO.1 (FRONT) SPARK PLUG REMOVAL

- Disconnect the horn lead wires.
- Remove the horn with its bracket.

- Remove the radiator mounting bolt.
- Disconnect the cooling fan thermo-switch lead wire.

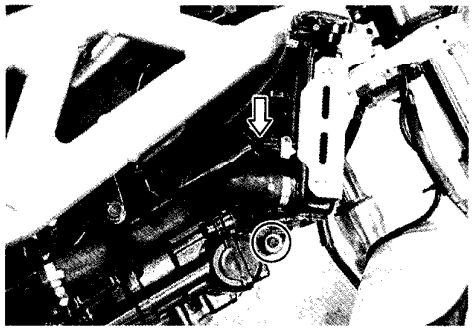

- Move the radiator lower side to forward.

NOTE:
** Do not extract the radiator hoses.*
** Place a wooden block Ⓐ between the radiator and the front cylinder to facilitate spark plug removal.*

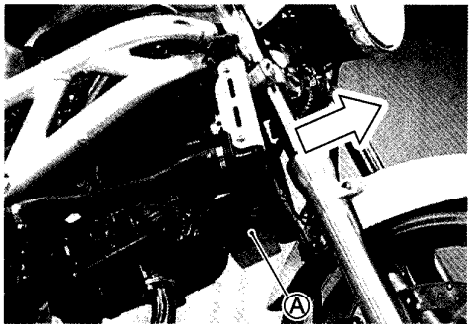

- Remove the spark plug cap.
- Remove the spark plug with a spark plug wrench.

NOTE:
Be careful not to damage the radiator fins.

⚠ WARNING

The hot radiator and the hot engine can burn you. Wait until the radiator and the engine are cool enough to touch.

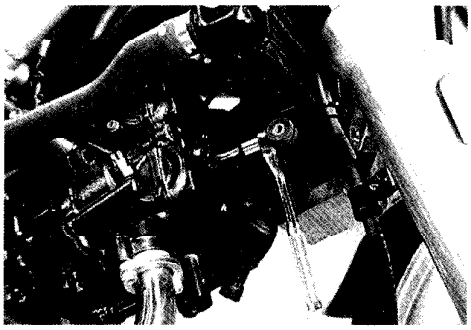

NO.2 (REAR) SPARK PLUG REMOVAL

- Remove the front and rear seats. (☞ 6-3)
- Lift and support the fuel tank. (☞ 4-4)

- Remove the spark plug cap.
- Remove the spark plug with a spark plug wrench.

HEAT RANGE

- Check to see the heat range of the plug.

	NGK	DENSO
Standard	CR8E	U24ESR-N
Colder type	CR9E	U27ESR-N
	CR10E	U31ESR-N

NOTE:
"R" type spark plug has a resistor located at the center electrode to prevent to prevent radio noise.

CARBON DEPOSITS

- Check to see if there are carbon deposits on the spark plug.
- If carbon is deposited, remove it using a spark plug cleaner machine or carefully use a tool with a pointed end.

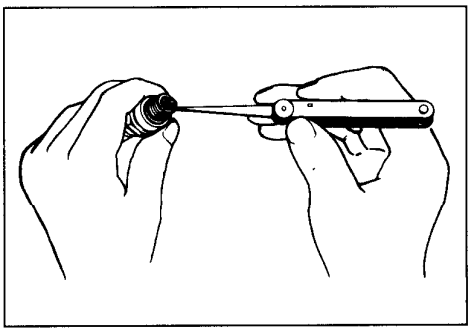

SPARK PLUG GAP

- Measure the spark plug gap using a thickness gauge.
- If out of specification, regap the spark plug.

DATA Spark plug gap

Standard: 0.7 – 0.8 mm (0.028 – 0.031 in)

TOOL 09900-20803: Thickness gauge

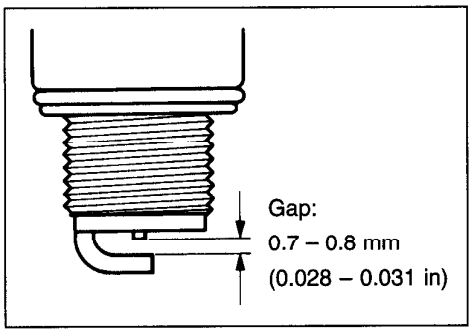

ELECTRODE'S CONDITION

- Check the condition of the electrode.
- If it is extremely worn or burnt, replace the spark plug. Replace the spark plug if it has a broken insulator, damaged thread, etc.

▲ CAUTION

Check the thread size and reach when replacing the spark plug. If the reach is too short, carbon will be deposited on the screw portion of the spark plug hole and engine damage may result.

SPARK PLUG INSTALLATION

▲ CAUTION

To avoid damaging the cylinder head threads, first finger tighten the spark plug and then tighten it to the proper torque using the spark plug wrench.

- First, finger tighten the spark plugs, and then tighten them to the specified torque.

Spark plug: 11 N·m (1.1 kgf·m, 8.0 lb-ft)

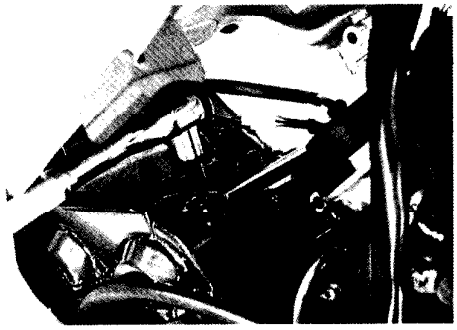

NOTE:
When fitting the spark plug caps, front and rear, face the triangle marks on the water-proof covers Ⓐ to each cylinder exhaust side.

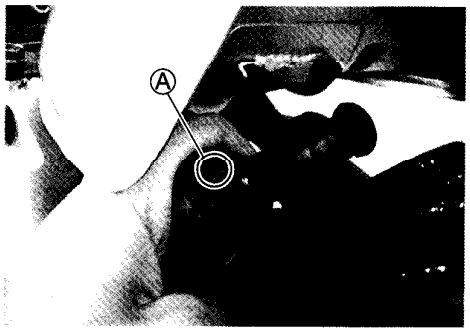

TAPPET CLEARANCE

Inspect every 24 000 km (15 000 miles, 24 months).

- Remove the front and rear seats. (☞ 6-3)
- Lift and support the fuel tank. (☞ 4-4)
- Remove the radiator. (☞ 5-4)
- Remove the spark plugs, front and rear. (☞ 2-5)
- Remove the cylinder head covers, front and rear.

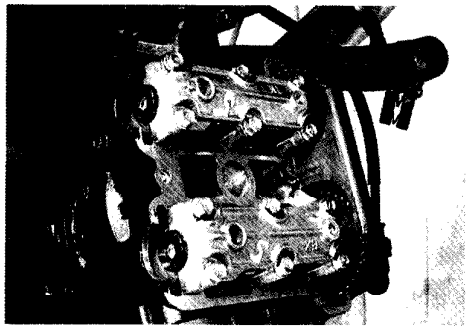

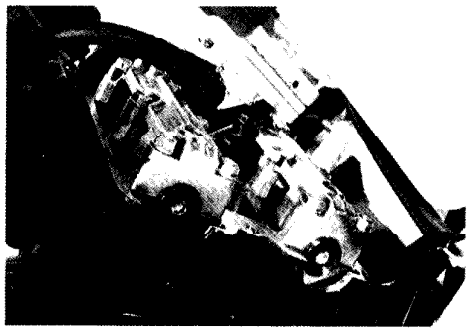

The tappet clearance specification is different for intake and exhaust valves.
Tappet clearance must be checked and adjusted, 1) at the time of periodic inspection, 2) when the valve mechanism is serviced, and 3) when the camshafts are disturbed by removing them for servicing.

DATA **Tappet clearance (when cold):**
IN. : 0.10 – 0.20 mm (0.004 – 0.008 in)
EX.: 0.20 – 0.30 mm (0.008 – 0.012 in)

NOTE:
- *The tappet clearance should be taken when each cylinder is at Top Dead Center (TDC) of compression stroke.*
- *The cams (IN & EX) on the front cylinder at position Ⓐ show the front cylinder at TDC of compression stroke.*
- *The cams (IN & EX) on the rear cylinder at position Ⓑ show the rear cylinder at TDC of compression stroke.*
- *The clearance specification is for COLD state.*
- *To turn the crankshaft for clearance checking, be sure to use a wrench, and rotate in the normal running direction. All spark plugs should be removed.*

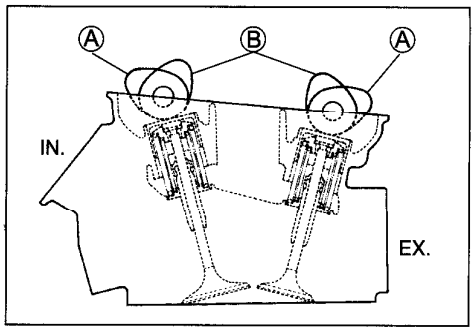

- Remove the generator cover plug ① and the timing inspection plug ②.

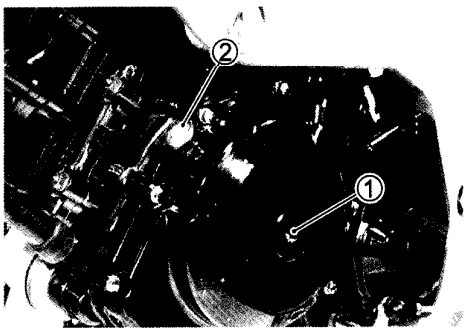

- Turn the crankshaft to set the No.1 (Front) cylinder at TDC of compression stroke. (Align the "| F" line on the generator rotor to the index mark of valve timing inspection hole and also bring the camshafts to the position as shown in page 2-8.)

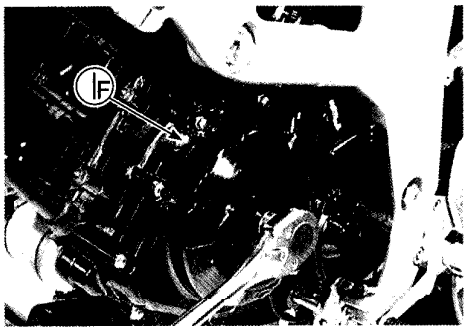

- To inspect the No.1 (Front) cylinder tappet clearance, use a thickness gauge between the tappet and the cam. If the clearance is out of specification, adjust it into the specified range.

TOOL 09900-20803: Thickness gauge

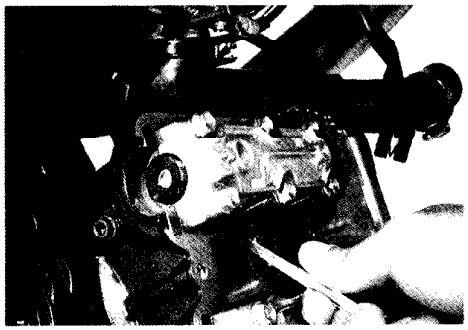

- Turn the crankshaft 270 degrees (3/4 turns) to set the No.2 (Rear) cylinder at TDC of compression stroke. (Align the "| R" line on the generator rotor to the index mark of valve timing inspection hole and also bring the camshafts to the position as shown in page 2-8.)

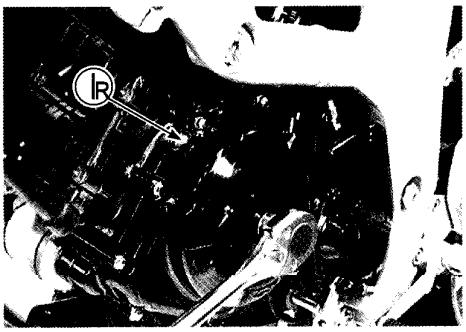

- Inspect the No.2 (Rear) cylinder tappet clearance as the same manner of No.1 (Front) cylinder and adjust the clearance if necessary.

TOOL 09900-20803: Thickness gauge

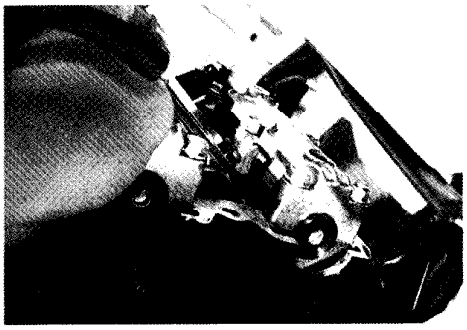

TAPPET CLEARANCE ADJUSTMENT

The clearance is adjusted by replacing the existing tappet shim by a thicker or thinner shim.

- Remove the intake or exhaust camshafts. (☞ 3-21, 3-23)
- Remove the tappet and shim by fingers or magnetic hand.
- Check the figures printed on the shim. These figures indicate the thickness of the shim, as illustrated.
- Select a replacement shim that will provide a clearance within the specified range. For the purpose of this adjustment, a total of 21 sizes of tappet shim are available ranging from 1.20 to 2.20 mm in steps of 0.05 mm. Fit the selected shim to the valve stem end, with numbers toward tappet. Be sure to check shim size with micrometer to ensure its size. Refer to the tappet shim selection table (☞ 2-11, 2-12) for details.

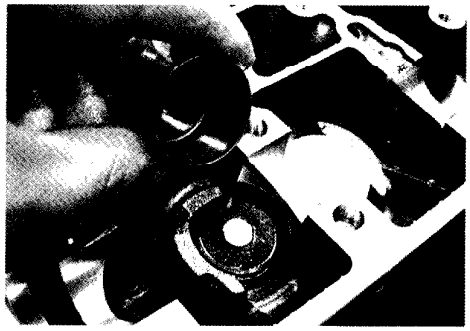

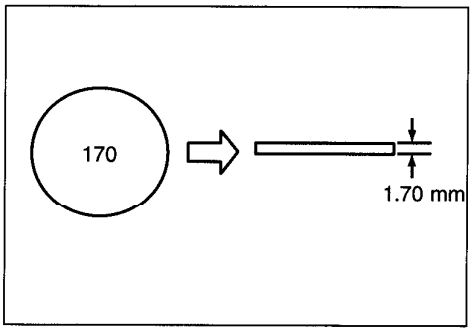

NOTE:

- *Be sure to apply engine oil to tappet shim top and bottom faces.*
- *When seating the tappet shim, be sure to face figure printed surface to the tappet.*

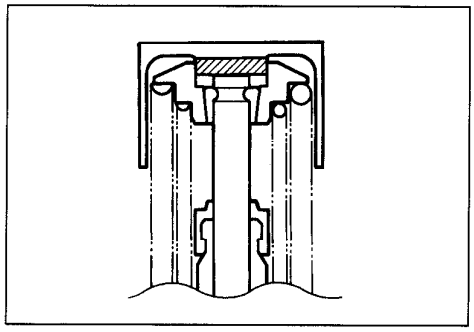

▲ CAUTION

Reinstall the camshafts as the specified manner. (☞ 3-109, 3-113)

- After replacing the tappet shim and camshafts, rotate the engine so that the tappet is depressed fully. This will squeeze out oil trapped between the shim and the tappet that could cause an incorrect measurement, then check the clearance again to confirm that it is within the specified range.

- After finishing the tappet clearance adjustment, reinstall the following items.

	Page
* Cylinder head cover	3-118
* Spark plug and plug cap	2-7 and -8
* Valve timing inspection plug	3-119
* Generator cover plug	3-119

TAPPET SHIM SELECTION TABLE [INTAKE]
TAPPET SHIM NO. (12892-05C00-XXX)

TAPPET SHIM SET (12800-05820)

MEASURED TAPPET CLEAFANCE (mm) \ SUFFIX NO.	120	125	130	135	140	145	150	155	160	165	170	175	180	185	190	195	200	205	210	215	220
PRESENT SHIM SIZE (mm)	1.20	1.25	1.30	1.35	1.40	1.45	1.50	1.55	1.60	1.65	1.70	1.75	1.80	1.85	1.90	1.95	2.00	2.05	2.10	2.15	2.20
0.00-0.04			1.20	1.25	1.30	1.35	1.40	1.45	1.50	1.55	1.60	1.65	1.70	1.75	1.80	1.85	1.90	1.95	2.00	2.05	2.10
0.05-0.09		1.20	1.25	1.30	1.35	1.40	1.45	1.50	1.55	1.60	1.65	1.70	1.75	1.80	1.85	1.90	1.95	2.00	2.05	2.10	2.15
0.10-0.20	SPECIFIED CLEARANCE/NO ADJUSTMENT REQUIRED																				
0.21-0.25	1.30	1.35	1.40	1.45	1.50	1.55	1.60	1.65	1.70	1.75	1.80	1.85	1.90	1.95	2.00	2.05	2.10	2.15	2.20	2.20	
0.26-0.30	1.35	1.40	1.45	1.50	1.55	1.60	1.65	1.70	1.75	1.80	1.85	1.90	1.95	2.00	2.05	2.10	2.15	2.20			
0.31-0.35	1.40	1.45	1.50	1.55	1.60	1.65	1.70	1.75	1.80	1.85	1.90	1.95	2.00	2.05	2.10	2.15	2.20				
0.36-0.40	1.45	1.50	1.55	1.60	1.65	1.70	1.75	1.80	1.85	1.90	1.95	2.00	2.05	2.10	2.15	2.20					
0.41-0.45	1.50	1.55	1.60	1.65	1.70	1.75	1.80	1.85	1.90	1.95	2.00	2.05	2.10	2.15	2.20						
0.46-0.50	1.55	1.60	1.65	1.70	1.75	1.80	1.85	1.90	1.95	2.00	2.05	2.10	2.15	2.20							
0.51-0.55	1.60	1.65	1.70	1.75	1.80	1.85	1.90	1.95	2.00	2.05	2.10	2.15	2.20								
0.56-0.60	1.65	1.70	1.75	1.80	1.85	1.90	1.95	2.00	2.05	2.10	2.15	2.20									
0.61-0.65	1.70	1.75	1.80	1.85	1.90	1.95	2.00	2.05	2.10	2.15	2.20										
0.66-0.70	1.75	1.80	1.85	1.90	1.95	2.00	2.05	2.10	2.15	2.20											
0.71-0.75	1.80	1.85	1.90	1.95	2.00	2.05	2.10	2.15	2.20												
0.76-0.80	1.85	1.90	1.95	2.00	2.05	2.10	2.15	2.20													
0.81-0.85	1.90	1.95	2.00	2.05	2.10	2.15	2.20														
0.86-0.90	1.95	2.00	2.05	2.10	2.15	2.20															
0.91-0.95	2.00	2.05	2.10	2.15	2.20																
0.96-1.00	2.05	2.10	2.15	2.20																	
1.01-1.05	2.10	2.15	2.20																		
1.06-1.10	2.15	2.20																			
1.11-1.15	2.20																				

HOW TO USE THIS CHART:

I. Measure tappet clearance. "ENGINE IS COLD"

II. Measure present shim size.

III. Match clearance in vertical column with present shim size in horizontal column.

EXAMPLE

Tappet clearance is	0.23 mm
Present shim size	1.70 mm
Shim size to be used	1.80 mm

(EXHAUST SIDE)

TAPPET SHIM SELECTION TABLE [EXHAUST]
TAPPET SHIM NO. (12892-05C00-XXX)

TAPPET SHIM SET (12800-05820)

MEASURED TAPPET CLEARANCE (mm) / SUFFIX NO.	120	125	130	135	140	145	150	155	160	165	170	175	180	185	190	195	200	205	210	215	220
PRESENT SHIM SIZE (mm)	1.20	1.25	1.30	1.35	1.40	1.45	1.50	1.55	1.60	1.65	1.70	1.75	1.80	1.85	1.90	1.95	2.00	2.05	2.10	2.15	2.20
0.05-0.09				1.20	1.25	1.30	1.35	1.40	1.45	1.50	1.55	1.60	1.65	1.70	1.75	1.80	1.85	1.90	1.95	2.00	2.05
0.10-0.14			1.20	1.25	1.30	1.35	1.40	1.45	1.50	1.55	1.60	1.65	1.70	1.75	1.80	1.85	1.90	1.95	2.00	2.05	2.10
0.15-0.19		1.20	1.25	1.30	1.35	1.40	1.45	1.50	1.55	1.60	1.65	1.70	1.75	1.80	1.85	1.90	1.95	2.00	2.05	2.10	2.15
0.20-0.30	SPECIFIED CLEARANCE/NO ADJUSTMENT REQUIRED																				
0.31-0.35	1.30	1.35	1.40	1.45	1.50	1.55	1.60	1.65	1.70	1.75	1.80	1.85	1.90	1.95	2.00	2.05	2.10	2.15	2.20	2.20	
0.36-0.40	1.35	1.40	1.45	1.50	1.55	1.60	1.65	1.70	1.75	1.80	1.85	1.90	1.95	2.00	2.05	2.10	2.15	2.20			
0.41-0.45	1.40	1.45	1.50	1.55	1.60	1.65	1.70	1.75	1.80	1.85	1.90	1.95	2.00	2.05	2.10	2.15	2.20				
0.46-0.50	1.45	1.50	1.55	1.60	1.65	1.70	1.75	1.80	1.85	1.90	1.95	2.00	2.05	2.10	2.15	2.20					
0.51-0.55	1.50	1.55	1.60	1.65	1.70	1.75	1.80	1.85	1.90	1.95	2.00	2.05	2.10	2.15	2.20						
0.56-0.60	1.55	1.60	1.65	1.70	1.75	1.80	1.85	1.90	1.95	2.00	2.05	2.10	2.15	2.20							
0.61-0.65	1.60	1.65	1.70	1.75	1.80	1.85	1.90	1.95	2.00	2.05	2.10	2.15	2.20								
0.66-0.70	1.65	1.70	1.75	1.80	1.85	1.90	1.95	2.00	2.05	2.10	2.15	2.20									
0.71-0.75	1.70	1.75	1.80	1.85	1.90	1.95	2.00	2.05	2.10	2.15	2.20										
0.76-0.80	1.75	1.80	1.85	1.90	1.95	2.00	2.05	2.10	2.15	2.20											
0.81-0.85	1.80	1.85	1.90	1.95	2.00	2.05	2.10	2.15	2.20												
0.86-0.90	1.85	1.90	1.95	2.00	2.05	2.10	2.15	2.20													
0.91-0.95	1.90	1.95	2.00	2.05	2.10	2.15	2.20														
0.96-1.00	1.95	2.00	2.05	2.10	2.15	2.20															
1.01-1.05	2.00	2.05	2.10	2.15	2.20																
1.06-1.10	2.05	2.10	2.15	2.20																	
1.11-1.15	2.10	2.15	2.20																		
1.16-1.20	2.15	2.20																			
1.21-1.25	2.20																				

HOW TO USE THIS CHART:

I. Measure tappet clearance. "ENGINE IS COLD"

II. Measure present shim size.

III. Match clearance in vertical column with present shim size in horizontal column.

EXAMPLE

Tappet clearance is	0.33 mm
Present shim size	1.70 mm
Shim size to be used	1.80 mm

ENGINE OIL AND OIL FILTER

(ENGINE OIL)
Replace initially at 1 000 km (600 miles, 1 month) and every 6 000 km (4 000 miles, 6 months) thereafter.

(OIL FILTER)
Replace initially at 1 000 km (600 miles, 1 month) and every 18 000 km (11 000 miles, 18 months) thereafter.

Oil should be changed while the engine is warm. Oil filter replacement at the above intervals, should be done together with the engine oil change.

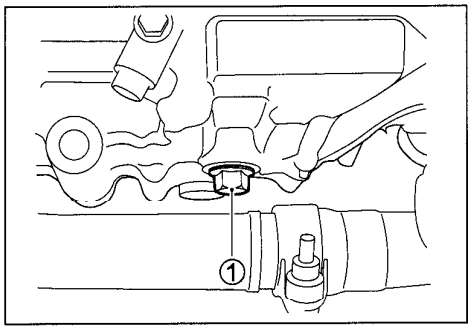

ENGINE OIL REPLACEMENT

- Keep the motorcycle upright.
- Place an oil pan below the engine, and drain oil by removing the oil drain plug ① and filler cap ②.

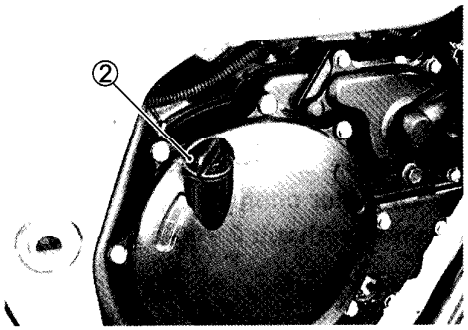

- Tighten the drain plug ① to the specified torque, and pour fresh oil through the oil filler. The engine will hold about 2.3 L (2.4/2.0 US/Imp qt) of oil. Use an API classification of SF or SG oil with SAE 10W/40 viscosity.

Oil drain plug (M12): 21 N·m (2.1 kgf·m, 15 lb-ft)

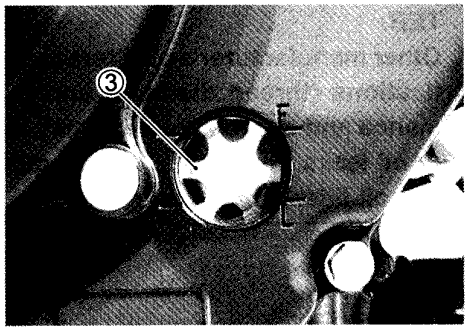

- Start up the engine and allow it to run for several minutes at idling speed.
- Turn off the engine and wait about one minute, then check the oil level through the inspection window ③. If the level is below mark "L", add oil to "F" level. If the level is above mark "F", drain oil to "F" level.

OIL FILTER REPLACEMENT

- Drain the engine oil as described in the engine oil replacement procedure.
- Remove the oil filter ① using the special tool.
- Apply engine oil lightly to the gasket of the new oil filter before installation.

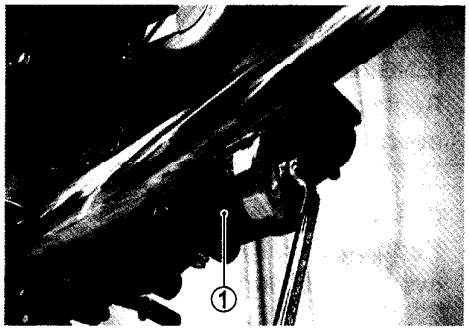

- Install the new oil filter. Turn it by hand until you feel that the oil filter gasket has contacted the oil filter mounting surface. Then, tighten the oil filter two full turns using the special tool.

TOOL 09915-40610: Oil filter wrench

NOTE:
To properly tighten the oil filter, use the special tool. Never tighten the oil filter by hand.

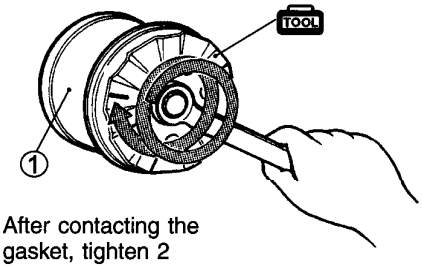

After contacting the gasket, tighten 2 turns.

- Add new engine oil and check the oil level as described in the engine oil replacement procedure.

NECESSARY AMOUNT OF ENGINE OIL
Oil change: 2 300 ml (2.4/2.0 US/Imp qt)
Oil and filter change: 2 400 ml (2.5/2.1 US/Imp qt)
Engine overhaul: 2 700 ml (2.9/2.4 US/Imp qt)

⚠ CAUTION

ONLY USE A GENUINE SUZUKI MOTORCYCLE OIL FILTER.
Other manufacturer's oil filters may differ in thread specifications (thread diameter and pitch), filtering performance and durability which may lead to engine damage or oil leaks. Also, do not use a genuine Suzuki automobile oil filter on this motorcycle.

FUEL HOSE

Inspect every 6 000 km (4 000 miles,6 months).
Replace every 4 years.

Inspect the fuel hoses for damage and fuel leakage. If any defects are found, the hoses must be replaced.

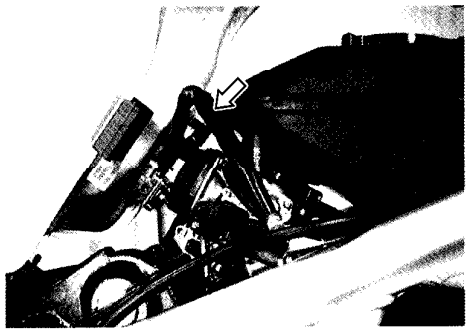

ENGINE IDLE SPEED

Inspect initially at 1 000 km (600 miles, 1 month) and every 6 000 km (4 000 miles, 6 months) thereafter.

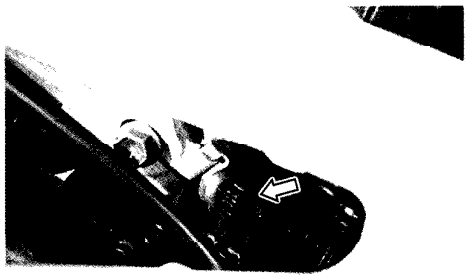

NOTE:
Make this adjustment when the engine is hot.

- Start the engine, turn the throttle stop screw and set the engine idle speed as follows.

DATA **Engine idle speed:**
1 300 ± 100 r/min

CARBURETOR SYNCHRONIZATION

Inspect initially at 1 000 km (600 miles, 1 month) (E-33 only) and every 12 000 km (7 500 miles, 12 months). (☞ 4-35)

EVAPORATIVE EMISSION CONTROL SYSTEM

(California model only)

Inspect every 12 000 km (7 500 miles, 12 months),
Replace vapor hose every 4 years. (☞ 9-3)

PAIR (AIR SUPPLY) SYSTEM

(California model only)

Inspect every 12 000 km (7 500 miles, 12 months),
(☞ 9-6)

THROTTLE CABLE PLAY

Inspect initially at 1 000 km (600 miles, 1 month) and every 6 000 km (4 000 miles, 6 months) thereafter.

Adjust the throttle cable play Ⓐ as follows.

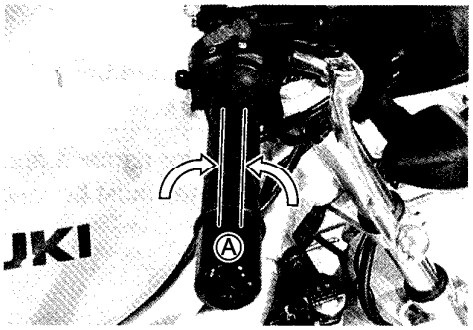

1st step:
- Loosen the locknut ① of the throttle returning cable ② and fully turn in the adjuster ③.

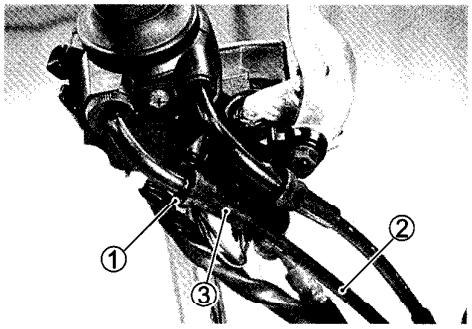

2nd step:
- Loosen the locknut ④ of the throttle pulling cable ⑤.
- Turn the adjuster ⑥ in or out until the throttle cable play (at the throttle grip) Ⓐ is between 2.0 – 4.0 mm (0.08 – 0.16 in).
- Tighten the locknut ④ while holding the adjuster ⑥.

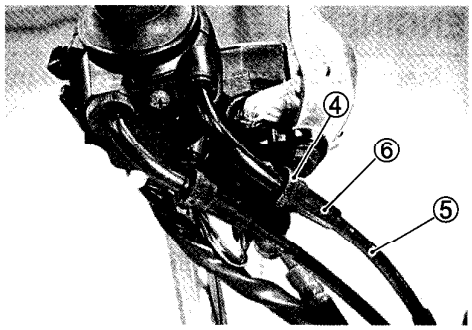

3rd step:
- While holding the throttle grip at the fully closed position, slowly turn out the adjuster ③ of the throttle returning cable ② until resistance is felt.
- Tighten the locknut ① while holding the adjuster ③.

DATA Throttle cable play Ⓐ: 2.0 – 4.0 mm (0.08 – 0.16 in)

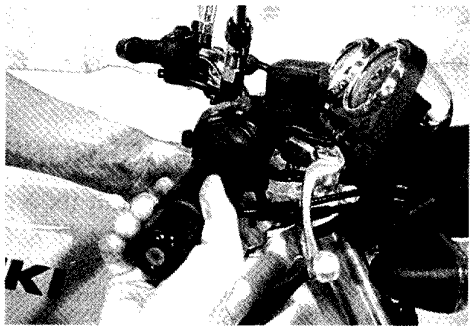

⚠ WARNING

After the adjustment is completed, check that handlebar movement does not raise the engine idle speed and that the throttle grip returns smoothly and automatically.

NOTE:
Major adjustment can be made at the carburetor side adjuster.

CLUTCH CABLE PLAY

Inspect every 6 000 km (4 000 miles, 6 months).

- Loosen the locknut ① and turn the adjuster ② into the clutch lever assembly.

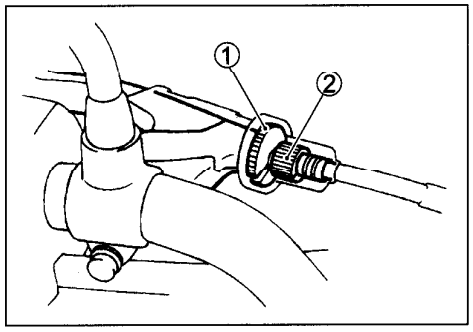

- Remove the engine sprocket cover.

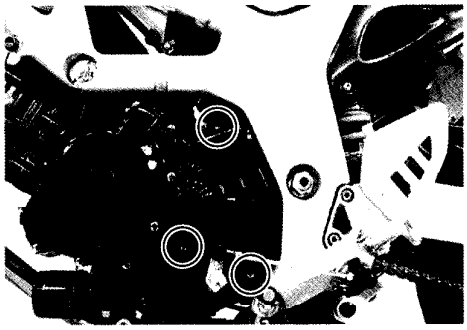

- Loosen the locknut ③ and turn out the adjusting screw ④ two or three rotations.
- Position the clutch release lever as shown by turning the locknuts ⑤.
- Tighten the locknuts ⑤.
- Slowly turn in the adjusting screw ④ until resistance is felt.
- Turn out the adjusting screw ④ 1/4 of a turn, and tighten the locknut ③.
- Turn in or out the cable adjuster ② to obtain 10 – 15 mm (0.4 – 0.6 in) of free play Ⓐ at the clutch lever end.
- Tighten the locknut ①.

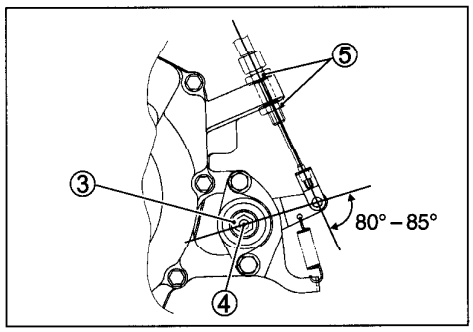

DATA **Clutch cable play Ⓐ: 10 – 15 mm (0.4 – 0.6 in)**

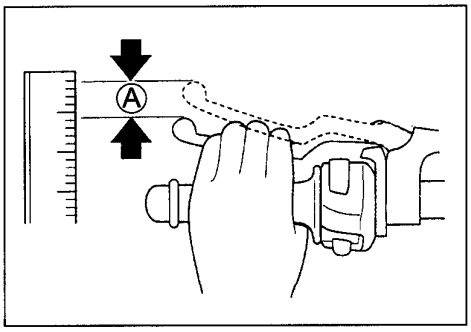

COOLING SYSTEM

Inspect every 6 000 km (4 000 miles, 6 months).
Replace engine coolant every 2 years.

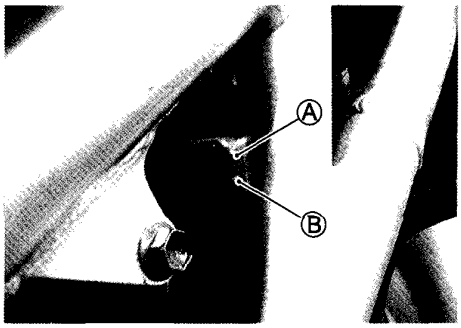

ENGINE COOLANT LEVEL CHECK

- Keep the motorcycle upright.
- Check the engine coolant level by observing the full and lower lines on the engine coolant reserve tank.

  Ⓐ Full line Ⓑ Lower line

- If the level is below the lower line, add engine coolant to the full line from the engine coolant reserve tank filler.

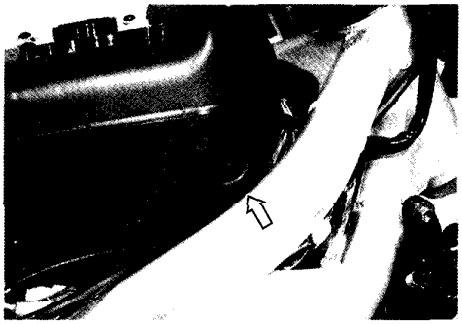

NOTE:
To remove the filler cap, lift and support the fuel tank. *(☞ 4-4)*

ENGINE COOLANT CHANGE

- Loosen the radiator cap stop screw.
- Remove the radiator cap ①.
- Drain engine coolant by removing the drain bolt ②.

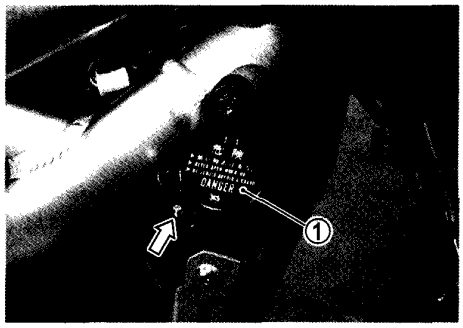

⚠ WARNING

- **Do not open the radiator cap when the engine is hot, as you may be injured by escaping hot liquid or vapor.**
- **Engine coolant may be harmful if swallowed or if it comes in contact with skin or eyes. If engine coolant gets into the eyes or in contact with the skin, flush thoroughly with plenty of water. If swallowed, induce vomiting and call physician immediately!**

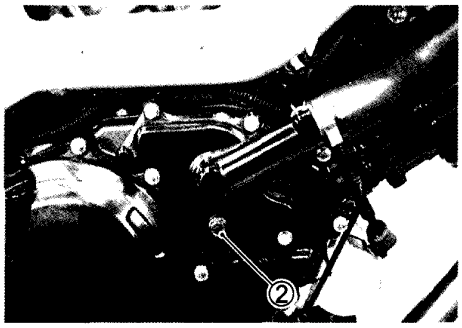

- Flush the radiator with fresh water if necessary.
- Tighten the water drain bolt ② to the specified torque.

Water drain bolt ②: 13 N·m (1.3 kgf·m, 9.5 lb-ft)

- Pour the specified engine coolant up to the radiator inlet.
- Bleed the air from the engine coolant circuit as following procedure.

NOTE:
For engine coolant information, refer to page 5-2.

AIR BLEEDING THE COOLING CIRCUIT

- Add engine coolant up to the radiator inlet.
- Support the motorcycle upright.
- Slowly swing the motorcycle, right and left, to bleed the air trapped in the cooling circuit.
- Add engine coolant up to the radiator inlet.

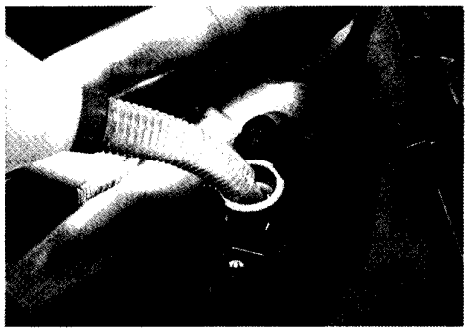

- Start up the engine and bleed air from the radiator inlet completely.
- Add engine coolant up to the radiator inlet.
- Repeat the above procedure until bleed no air from the radiator inlet.

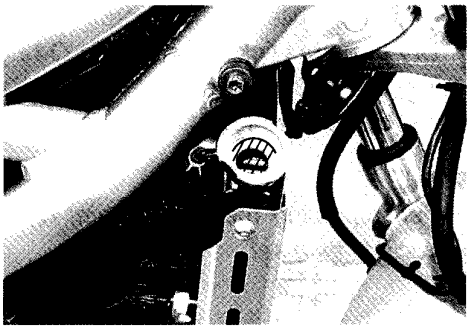

- Close the radiator cap ① securely.
- Tighten the radiator cap stop screw.
- After warming up and cooling down the engine several times, add the engine coolant up to the full level of the reserve tank.

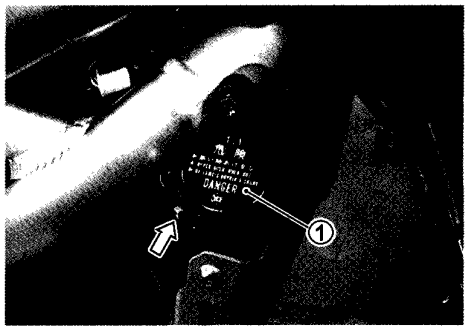

▲ CAUTION

Repeat the above procedure several times and make sure that the radiator is filled with engine coolant up to the reserve tank full level.

LLC Engine coolant capacity: 1 600 ml (1.7/1.4 US/Imp qt)

RADIATOR HOSES

Check to see the radiator hoses for crack, damage or engine coolant leakage.

If any defects are found, replace the radiator hoses with new ones.

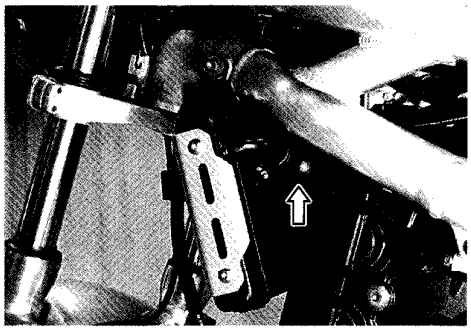

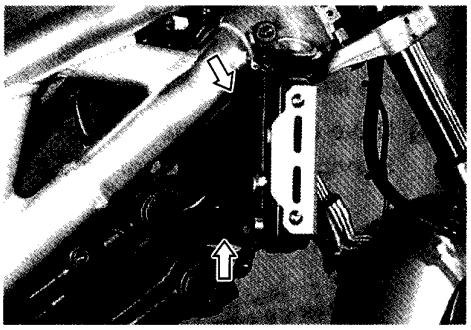

DRIVE CHAIN

Inspect initially at 1 000 km (600 miles, 1 month) and every 6 000 km (4 000 miles, 6 months) thereafter. Clean and lubricate every 1 000 km (600 miles).

Visually check the drive chain for the possible defects listed below. (Support the motorcycle by a jack and a wooden block, turn the rear wheel slowly by hand with the transmission shifted to Neutral.)

* Loose pins
* Damaged rollers
* Dry or rusted links
* Kinked or binding links
* Excessive wear
* Improper chain adjustment
* Missing O-ring seals

If any defects are found, the drive chain must be replaced.

NOTE:
When replacing the drive chain, replace the drive chain and sprockets as a set.

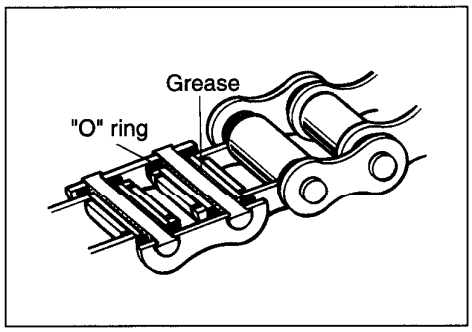

CHECKING

- Remove the axle cotter pin. (For E-03, 28 and 33 models)
- Loosen the axle nut ①.
- Loosen the torque link nut (Rear) ②.
- Tense the drive chain fully by turning both chain adjusters ③.

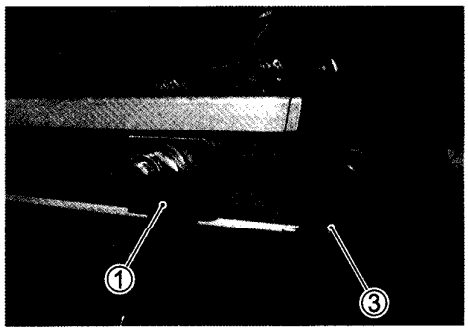

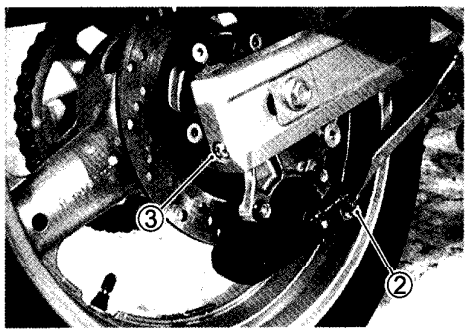

- Count out 21 pins (20 pitches) on the chain and measure the distance between the two points. If the distance exceeds the service limit, the chain must be replaced.

DATA **Drive chain 20-pitch length**
Service limit: 319.4 mm (12.57 in)

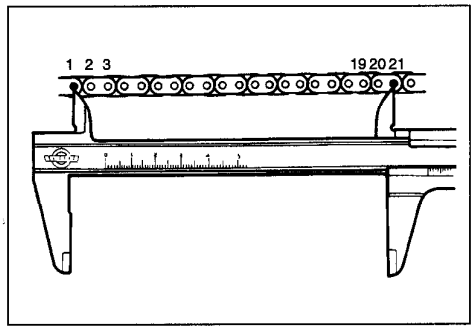

ADJUSTING

- Loosen or tighten both chain adjuster nuts ① until there is 20 – 30 mm (0.79 – 1.18 in) of slack at the middle of the chain between the engine and rear sprockets as shown. The reference marks ② on both sides of the swingarm and the edge of each chain adjuster must be aligned to ensure that the front and rear wheels are correctly aligned.

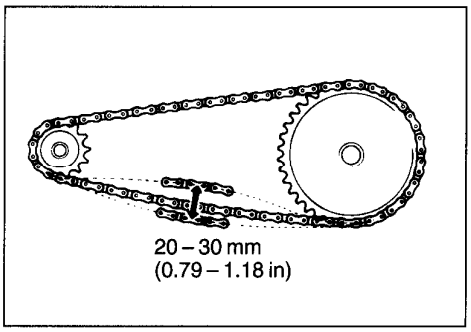

DATA **Drive chain slack**
Standard: 20 – 30 mm (0.79 – 1.18 in)

- Place the motorcycle on its side-stand for accurate adjustment.
- After adjusting the drive chain, tighten the axle nut ③ and the torque link nut (Rear) to the specified torque.
- Tighten both chain adjuster nuts ① securely.

Rear axle nut: 65 N·m (6.5 kgf·m, 47.0 lb-ft)
Torque link nut (Rear): 35 N·m (3.5 kgf·m, 25.5 lb-ft)

- Install a new cotter pin. (For E-03, 28, 33)
- Recheck the drive chain slack after tightening the axle nut.

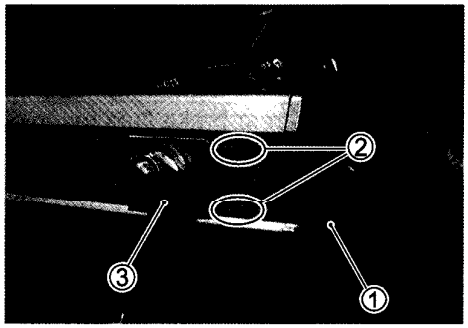

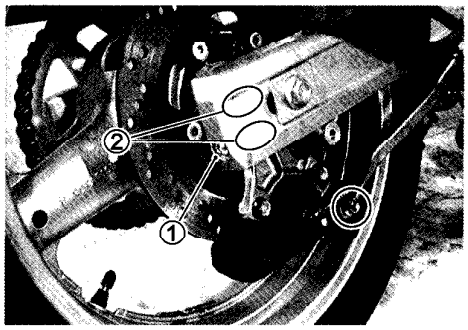

CLEANING AND LUBRICATING

- Clean the drive chain with kerosine. If the drive chain tends to rust quickly, the intervals must be shortened.

⚠ CAUTION

Do not use trichloroethylene, gasoline or any similar solvent. These fluids have too great a dissolving power for this chain and they can damage the O-rings. Use only kerosine to clean the drive chain.

- After washing and drying the chain, oil it with a heavyweight motor oil.

⚠ CAUTION

*** Do not use any oil sold commercially as "drive chain oil". Such oil can damage the O-rings.**
*** The standard drive chain is a D.I.D. 525V8 Suzuki recommends to use this standard drive chain as a replacement.**

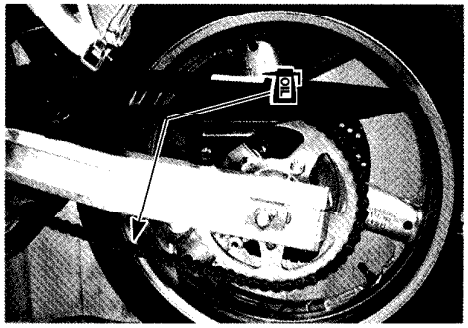

BRAKE

(BRAKE)
Inspect initially at 1 000 km (600 miles, 1 month) and every 6 000 km (4 000 miles, 6 months) thereafter.

(BRAKE HOSE AND BRAKE FLUID)
Inspect every 6 000 km (4 000 miles, 6 months). Replace hoses every 4 years. Replace fluid every 2 years.

BRAKE FLUID LEVEL CHECK

- Keep the motorcycle upright and place the handlebars straight.
- Remove the rear seat. (☞ 6-3)
- Check the brake fluid level by observing the lower limit lines on the front and rear brake fluid reservoirs.
- When the level is below the lower limit line, replenish with brake fluid that meets the following specification.

Specification and Classification: DOT 4

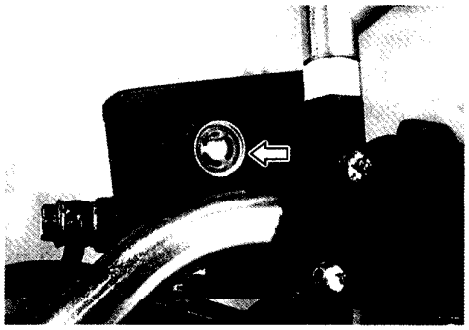

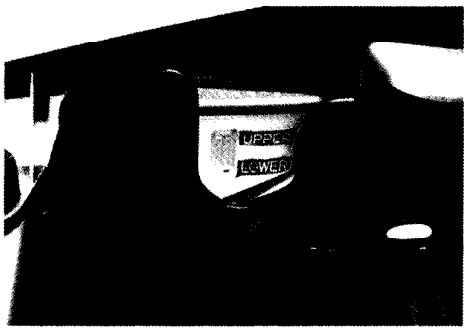

⚠ WARNING

* **The brake system of this motorcycle is filled with a glycol-based brake fluid. Do not use or mix different types of fluid such as silicone-based and petroleum-based fluids. Do not use any brake fluid taken from old, used or unsealed containers. Never re-use brake fluid left over from the last servicing or stored for a long period of time.**
* **Brake fluid, if it leaks, will interfere with safe running and immediately discolor painted surfaces. Check the brake hoses and hose joints for cracks and oil leakage before riding.**

BRAKE PADS

The extent of brake pad wear can be checked by observing the grooved limit line Ⓐ on the pad. When the wear exceeds the grooved limit line, replace the pads with new ones. (☞ 6-48, 6-56)

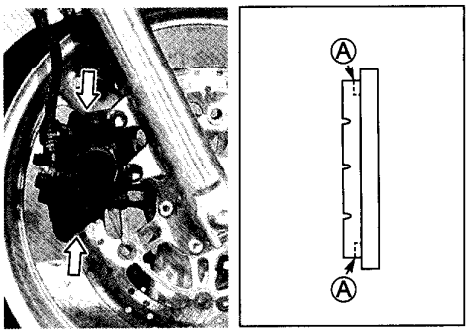

▲ CAUTION

Replace the brake pads as a set, otherwise braking performance will be adversely affected.

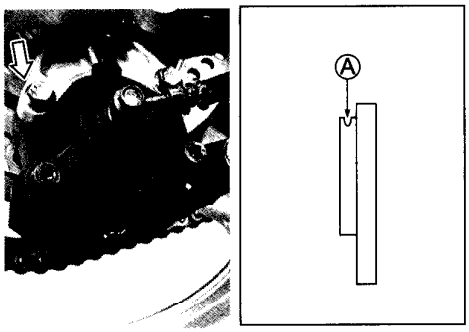

BRAKE PEDAL HEIGHT

- Loosen the locknut ①.
- Turn the push rod ② until the brake pedal is 55 – 65 mm (2.17 – 2.56 in) Ⓐ below the top of the footrest.
- Tighten the locknut ① securely.

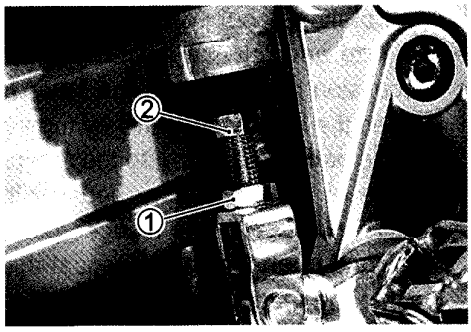

Rear brake master cylinder rod locknut:
18 N·m (1.8 kgf·m, 13.0 lb-ft)

DATA Brake pedal height Ⓐ
Standard: 55 – 65 mm (2.17 – 2.56 in)

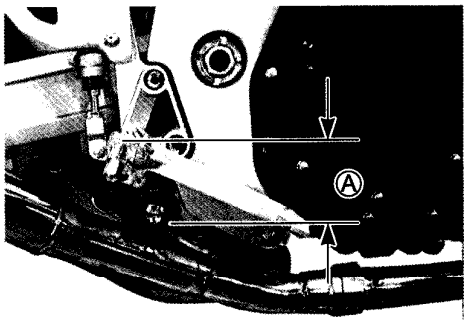

BRAKE LIGHT SWITCH

Adjust the rear brake light switch so that the brake light will come on just before pressure is felt when the brake pedal is depressed.

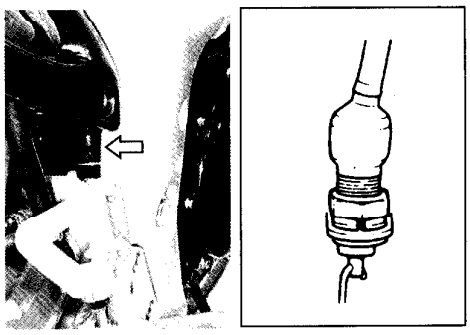

AIR BLEEDING THE BRAKE FLUID CIRCUIT

Air trapped in the brake fluid circuit acts like a cushion to absorb a large proportion of the pressure developed by the master cylinder and thus interferes with the full braking performance of the brake caliper. The presence of air is indicated by "sponginess" of the brake lever and also by lack of braking force. Considering the danger to which such trapped air exposes the machine and rider, it is essential that after remounting the brake and restoring the brake system to the normal condition, the brake fluid circuit be purged of air in the following manner:

- Fill the master cylinder reservoir to the top of the inspection window. Replace the reservoir cap to prevent dirt from entering.
- Attach a hose to the air bleeder valve and insert the free end of the hose into a receptacle.

- Front brake: Bleed air from the brake system.
- Squeeze and release the brake lever several times in rapid succession and squeeze the lever fully without releasing it. Loosen the air bleeder valve by turning it a quarter of a turn so that the brake fluid runs into the receptacle, this will remove the tension of the brake lever causing it to touch the handlebar grip. Then, close the air bleeder valve, pump and squeeze the lever, and open the valve. Repeat this process until fluid flowing into the receptacle no longer contains air bubbles.

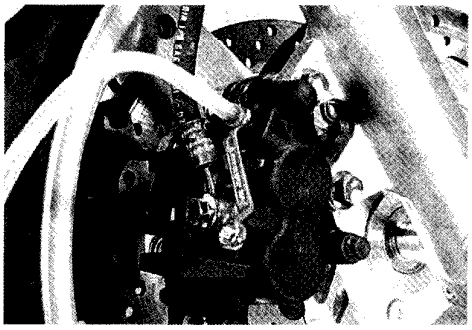

NOTE:
While bleeding the brake system, replenish the brake fluid in the reservoir as necessary. Make sure that there is always some fluid visible in the reservoir.

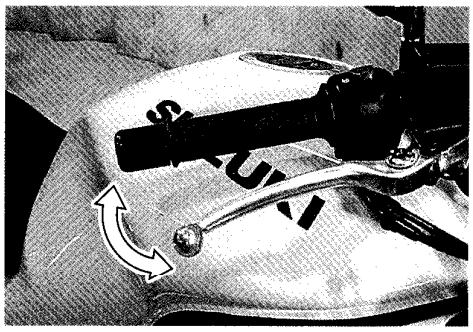

- Close the air bleeder valve and disconnect the hose. Fill the reservoir with brake fluid to the top of the inspection window.

Air bleeder valve: 7.5 N·m (0.75 kgf·m, 5.5 lb-ft)

▲ CAUTION

Handle brake fluid with care: the fluid reacts chemically with paint, plastics, rubber materials, etc.

- Rear brake: The only difference between bleeding the front and rear brakes is that the rear master cylinder is actuated by a pedal.

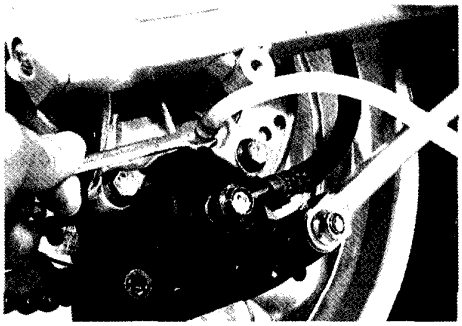

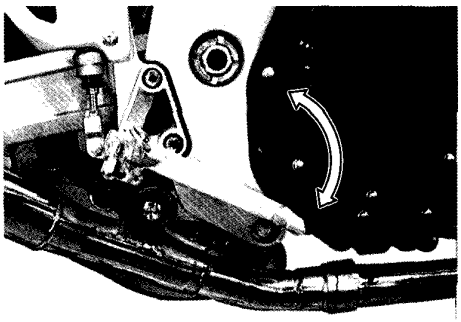

TIRES

Inspect every 6 000 km (4 000 miles, 6 months).

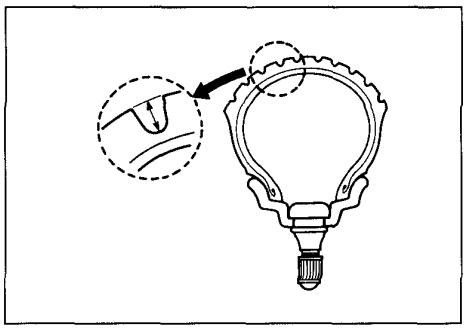

TIRE TREAD CONDITION

Operating the motorcycle with excessively worn tires will decrease riding stability and consequently invite a dangerous situation. It is highly recommended to replace a tire when the remaining depth of tire tread reaches the following specification.

TOOL 09900-20805: Tire depth gauge

DATA Tire tread depth (Recommend depth):

Service Limit:	**FRONT 1.6 mm (0.06 in)**
	REAR 2.0 mm (0.08 in)

TIRE PRESSURE

If the tire pressure is too high or too low, steering will be adversely affected and tire wear will increase. Therefore, maintain the correct tire pressure for good roadability and a longer tire life. Cold inflation tire pressure is as follows.

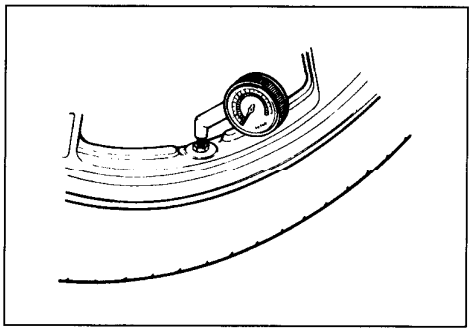

COLD INFLATION TIRE PRESSURE	SOLO RIDING			DUAL RIDING		
	kPa	kgf/cm²	psi	kPa	kgf/cm²	psi
FRONT	225	2.25	33	225	2.25	33
REAR	250	2.50	36	250	2.50	36

▲ CAUTION

The standard tire fitted on this motorcycle is a 120/60 ZR17 (55W) for the front and a 160/60 ZR17 (69W) for the rear. The use of tires other than those specified may cause instability. It is highly recommended to use the specified tires.

DATA TIRE TYPE
METZELER (MEZ4 FRONT.....Front, MEZ4.....Rear)

STEERING

Inspect initially at 1 000 km (600 miles, 1 month) and every 12 000 km (7 500 miles, 12 months) thereafter.

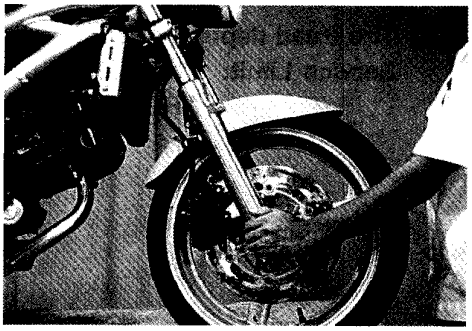

The steering should be adjusted properly for smooth turning of the handlebars and safe operation. Overtight steering prevents smooth turning of the handlebars and too loose steering will cause poor stability. Check that there is no play in the front fork. Support the motorcycle so that the front wheel is off the ground. With the wheel facing straight ahead, grasp the lower fork tubes near the axle and pull forward. If play is found, readjust the steering. (☞ 6-28)

FRONT FORK

Inspect every 12 000 km (7 500 miles, 12 months).

Inspect the front forks for oil leakage, scoring or scratches on the outer surface of the inner tubes. Replace any defective parts, if necessary. (☞ 6-11)

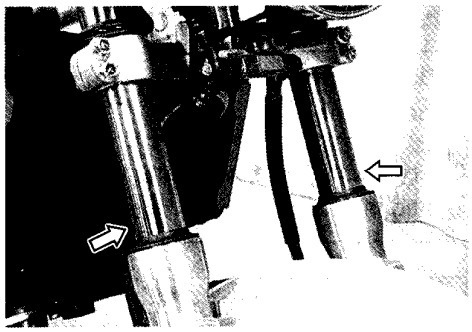

REAR SUSPENSION

Inspect every 12 000 km (7 500 miles, 12 months).

Inspect the rear shock absorbers for oil leakage and check that there is no play in the swingarm. Replace any defective parts if necessary. (☞ 6-37)

EXHAUST PIPE BOLT AND NUT

Tighten initially at 1 000 km (600 miles, 1 month) and every 12 000 km (7 500 miles, 12 months) thereafter.

- Tighten the exhaust pipe bolts, nuts and muffler mounting bolts to the specified torque. (☞ 3-16)

CHASSIS BOLT AND NUT

Tighten initially at 1 000 km (600 miles, 1 month) and every 6 000 km (4 000 miles, 6 months) thereafter.

Check that all chassis bolts and nuts are tightened to their specified torque. (Refer to page 2-29 for the locations of the following nuts and bolts on the motorcycle.)

Item	N·m	kgf·m	lb-ft
① Steering stem head nut	65	6.5	47.0
② Front fork upper clamp bolt	23	2.3	16.5
③ Front fork lower clamp bolt	23	2.3	16.5
④ Front fork cap bolt	23	2.3	16.5
⑤ Front axle	65	6.5	47.0
⑥ Front axle pinch bolt	23	2.3	16.5
⑦ Handlebar clamp bolt	23	2.3	16.5
⑧ Handlebar holder nut	45	4.5	32.5
⑨ Clutch lever holder mounting bolt	10	1.0	7.0
⑩ Front brake master cylinder mounting bolt	10	1.0	7.0
⑪ Front brake caliper mounting bolt	39	3.9	28.0
⑫ Brake hose union bolt	23	2.3	16.5
⑬ Air bleeder valve	7.5	0.75	5.5
⑭ Brake disc bolt (Front and Rear)	23	2.3	16.5
⑮ Rear brake caliper mounting bolt	26	2.6	19.0
⑯ Rear brake caliper housing bolt	30	3.0	21.5
⑰ Rear brake master cylinder mounting bolt	10	1.0	7.0
⑱ Rear brake master cylinder rod lock nut	18	1.8	13.0
⑲ Front footrest bracket mounting bolt	23	2.3	16.5
⑳ Front footrest bolt	39	3.9	28.0
㉑ Swingarm pivot shaft nut	100	10.0	72.5
㉒ Swingarm pivot shaft lock nut	90	9.0	65.0
㉓ Swingarm pivot shaft	15	1.5	11.0
㉔ Torque link nut (Front & Rear)	35	3.5	25.5
㉕ Rear shock absorber mounting nut	50	5.0	36.0
㉖ Rear shock absorber mounting bolt	50	5.0	36.0
㉗ Cushion lever mounting nut	78	7.8	56.5
㉘ Cushion rod mounting nut	78	7.8	56.5
㉙ Rear axle nut	65	6.5	47.0
㉚ Rear sprocket nut	60	6.0	43.5

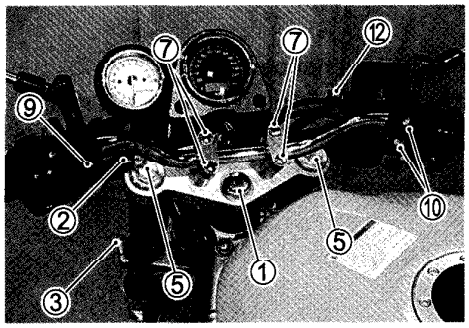
7
7
12
9
2
10
5
1
5
3

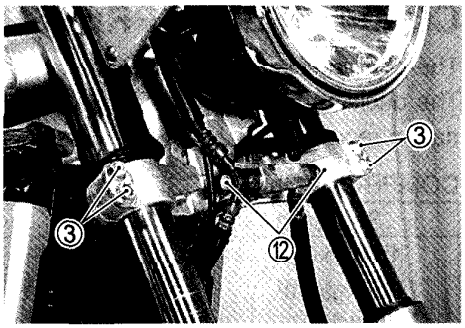
3
3
12

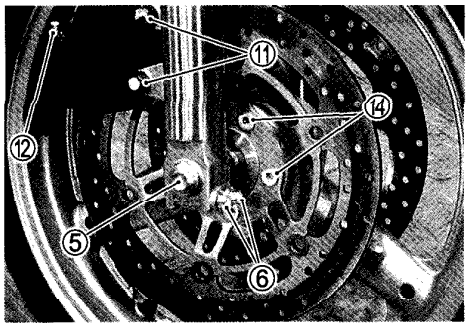
11
14
12
5
6

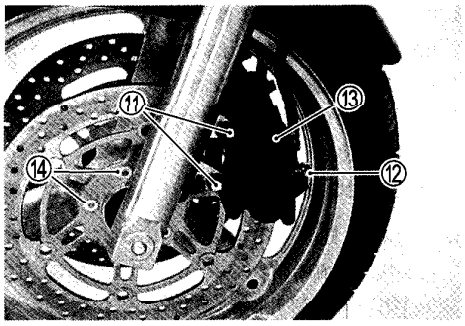
11
13
14
12

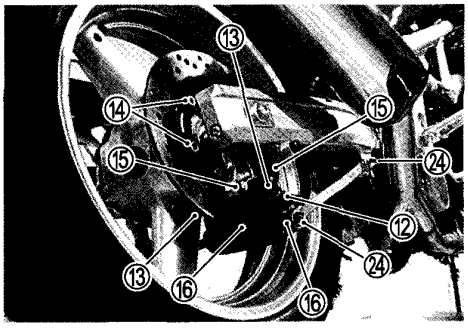
13
14
15
15
24
12
13
16
24
16

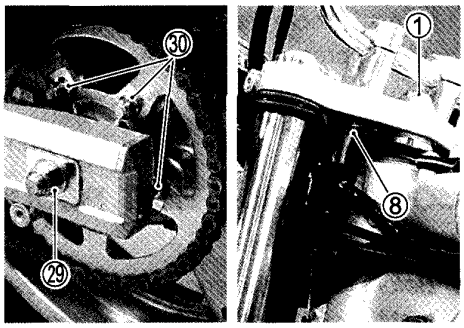
30
1
8
29

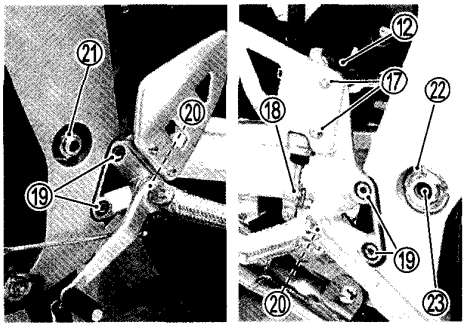
21
20
19
12
17
18
22
19
20
23

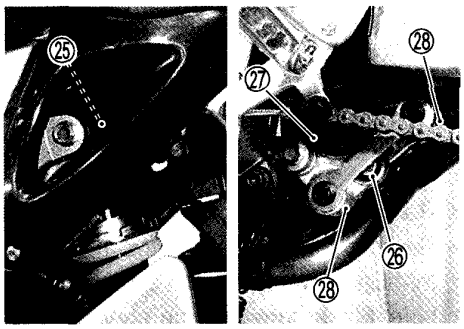
25
28
27
26
28

COMPRESSION PRESSURE CHECK

The compression pressure reading of a cylinder is a good indicator of its internal condition.
The decision to overhaul the cylinder is often based on the results of a compression test. Periodic maintenance records kept at your dealership should include compression readings for each maintenance service.

COMPRESSION PRESSURE SPECIFICATION

Standard	Limit	Difference
1 500 kPa (15 kgf/cm² 213 psi)	1 100 kPa (11 kgf/cm² 156 psi)	200kPa (2 kgf/cm² 28 psi)

Low compression pressure can indicate any of the following conditions:

* Excessively worn cylinder walls
* Worn piston or piston rings
* Piston rings stuck in grooves
* Poor valve seating
* Ruptured or otherwise defective cylinder head gasket

Overhaul the engine in the following cases:

* Compression pressure in one of the cylinders is less than 1 100 kPa (11 kgf/cm², 156 psi).
* The difference in compression pressure between any two cylinders is more than 200 kPa (2 kgf/cm², 28 psi).
* All compression pressure readings are nearly 1 100 kPa (11 kgf/cm², 156 psi) even when they measure more than 1 100 kPa (11 kgf/cm², 156 psi).

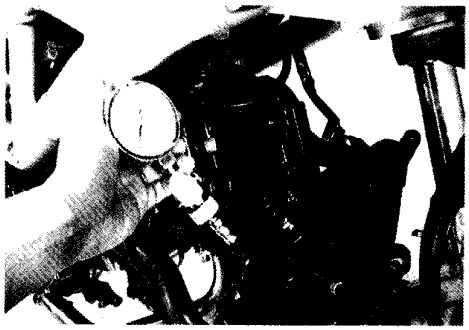

COMPRESSION TEST PROCEDURE

NOTE:

* *Before testing the engine for compression pressure, make sure that the cylinder head nuts are tightened to the specified torque values and the valves are properly adjusted.*
* *Have the engine warmed up before testing.*
* *Make sure that the battery is fully-charged.*

Remove the related parts and test the compression pressure in the following manner.

- Lift and support the fuel tank. (☞ 4-4)
- Remove the all radiator mounting bolts.
- Remove all the spark plugs. (☞ 2-5)
- Install the compression gauge and adaptor in the spark plug hole. Make sure that the connection is tight.
- Keep the throttle grip in the fully opened position.
- Press the starter button and crank the engine for a few seconds. Record the maximum gauge reading as the cylinder compression.
- Repeat this procedure with the other cylinders.

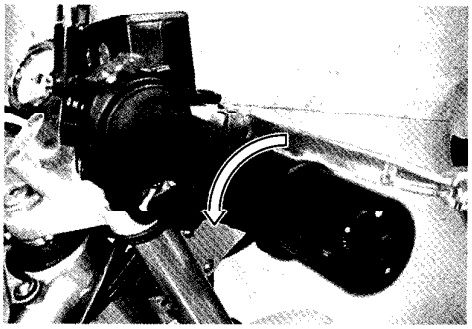

TOOL 09915-64510: Compression gauge set
09915-63310: Adaptor

OIL PRESSURE CHECK

Check the engine oil pressure periodically. This will give a good indication of the condition of the moving parts.

OIL PRESSURE SPECIFICATION

Above 200 kPa (2.0 kgf/cm², 28 psi) **Below 600 kPa (6.0 kgf/cm², 85 psi)**	**at 3 000 r/min., Oil temp. at 60°C (140°F)**

If the oil pressure is lower or higher than the specification, the following causes may be considered.

LOW OIL PRESSURE

* Clogged oil filter
* Oil leakage from the oil passage
* Damaged O-ring
* Defective oil pump
* Combination of the above items

HIGH OIL PRESSURE

* Engine oil viscosity is too high
* Clogged oil passage
* Combination of the above items

OIL PRESSURE TEST PROCEDURE

Start the engine and check if the oil pressure indicator light is turned on. If the light stays on, check the oil pressure indicator light circuit. If the circuit is OK, check the oil pressure in the following manner.

- Remove the main oil gallery plug ①.
- Install the oil pressure gauge and adaptor into the main oil gallery.
- Warm up the engine as follows:
  Summer: 10 min. at 2 000 r/min.
  Winter: 20 min. at 2 000 r/min.
- After warming up, increase the engine speed to 3 000 r/min. (observe the tachometer), and read the oil pressure gauge.

TOOL 09915-74520: Oil pressure gauge hose
09915-74532: Oil pressure gauge attachment
09915-77330: Meter (for high pressure)

Main oil gallery plug (M8): 18 N·m (1.8 kgf·m, 13.0 lb-ft)

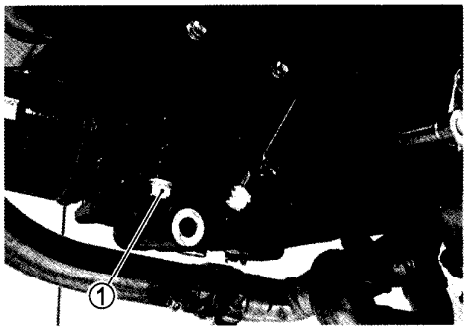

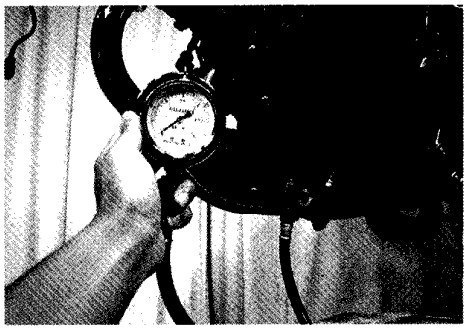

ENGINE

3

CONTENTS

ENGINE COMPONENTS REMOVABLE WITH THE ENGINE IN PLACE 3- 2
ENGINE REMOVAL AND INSTALLATION 3- 3
ENGINE REMOVAL 3- 3
ENGINE INSTALLATION 3-13
ENGINE DISASSEMBLY 3-20
ENGINE COMPONENTS INSPECTION AND SERVICE 3-40
CAMSHAFT 3-40
CAM CHAIN TENSION ADJUSTER 3-42
CAM CHAIN TENSIONER 3-42
CAM CHAIN GUIDE 3-42
CYLINDER HEAD AND VALVE 3-43
CYLINDER 3-53
PISTON AND PISTON RING 3-54
CONROD AND CRANKSHAFT 3-57
CRANKSHAFT JOURNAL BEARING 3-61
CRANKSHAFT THRUST BEARING 3-67
CRANKCASE 3-68
CLUTCH 3-75
PRIMARY DRIVEN GEAR 3-76
GEARSHIFT SHAFT/GEARSHIFT ARM 3-77
TRANSMISSION 3-78
STARTER CLUTCH 3-84
GENERATOR AND SIGNAL GENERATOR 3-85
OIL PUMP 3-86
ENGINE REASSEMBLY 3-87

ENGINE COMPONENTS REMOVABLE WITH ENGINE IN PLACE

The parts listed below can be removed and reinstalled without removing the engine from the frame. Refer to the page listed in this section for removal and reinstallation instructions.

ENGINE LEFT SIDE

PARTS	REMOVAL	INSTALLATION
Engine sprocket	3-8	3-16
Generator	3-35, 3-85	3-85, 3-92
Neutral indicator light switch	3-37	3-90
Clutch release	3-7	3-16
Starter idle gear	3-29	3-101

ENGINE RIGHT SIDE

PARTS	REMOVAL	INSTALLATION
Clutch	3-30	3-97
Primary driven gear	3-32, 3-76	3-76, 3-97
Primary drive gear	3-34	3-93
Oil pump	3-32	3-96
Oil pressure switch	3-70	3-70
Gearshift shaft	3-33	3-96
Water pump	5-12	5-16

ENGINE CENTER

PARTS	REMOVAL	INSTALLATION
Carburetor	4-18	4-30
Cylinder head covers	3-21	3-118
Camshafts	3-21	3-109, 3-113
Cylinder head	3-25	3-105
Cylinder	3-27	3-104
Piston	3-28	3-103
Cam chain tension adjusters	3-21, 3-23	3-111, 3-115
Thermostat	5-9	5-11
Oil filter	2-14	2-14
Starter motor	3-28	3-102

ENGINE REMOVAL AND INSTALLATION

ENGINE REMOVAL

Before taking the engine out of the frame, wash the engine using a steam cleaner. Engine removal is sequentially explained in the following steps. Reinstall the engine by reversing the removal procedure.

- Remove the front and rear seat. (☞ 6-3)
- Lift and support the fuel tank with the prop stay. (☞ 4-4)
- Remove the fuse box bracket ①.

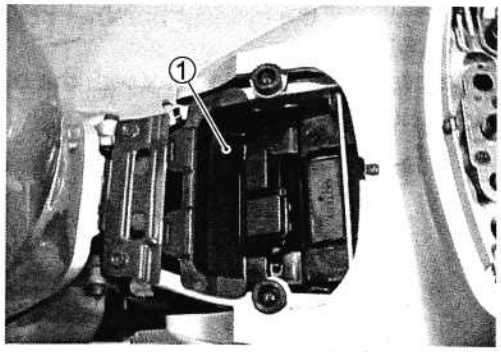

- Disconnect the battery ⊖ lead wire and coupler.

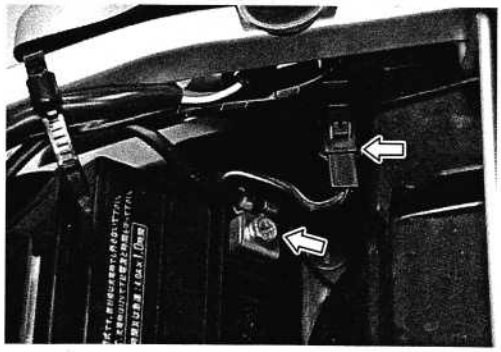

- Drain engine oil. (☞ 2-13)

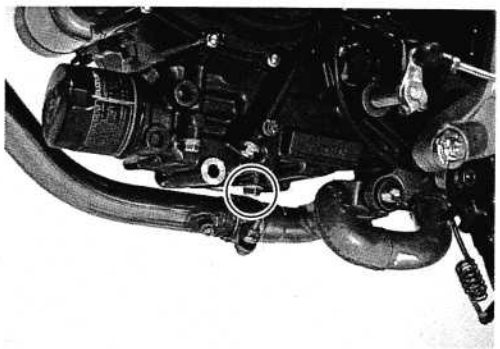

- Drain engine coolant. (☞ 2-18)

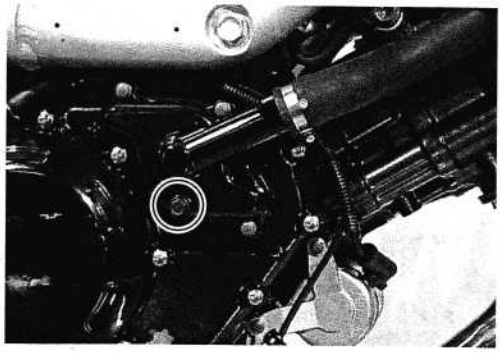

- Loosen the carburetor clamp screws ① at the air cleaner box side.

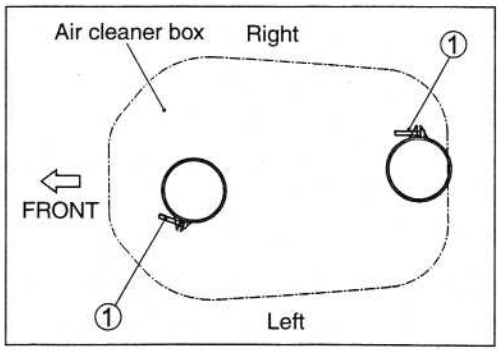

- Disconnect the cylinder breather hose ② and the crankcase breather hose ③.
- Remove the air cleaner box with the oil catch tank ④ and the drain hose.

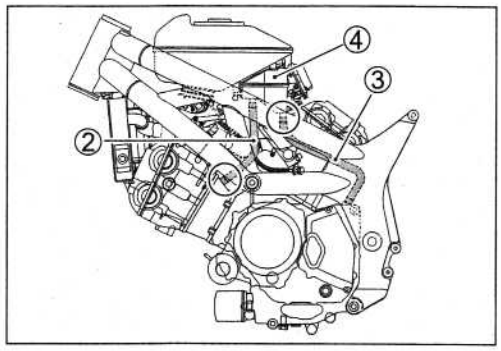

- Remove the horn with its bracket.

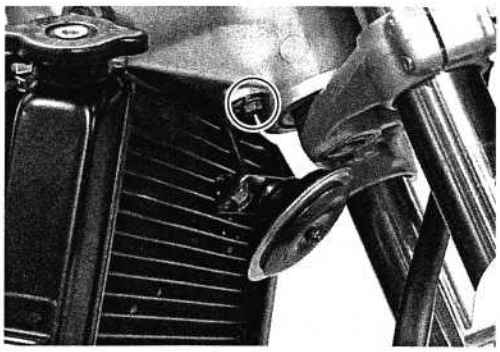

- Disconnect the cooling fan coupler ⑤.

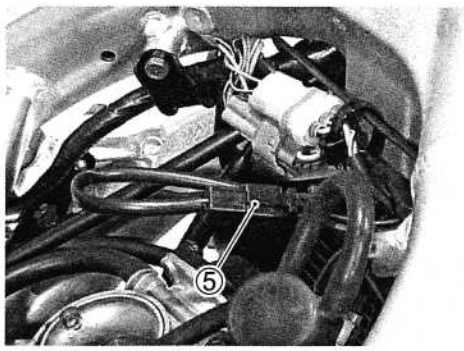

- Disconnect the cooling fan thermo-switch lead wire coupler.
- Disconnect the radiator outlet hose.
- Disconnect the reserve tank hose.

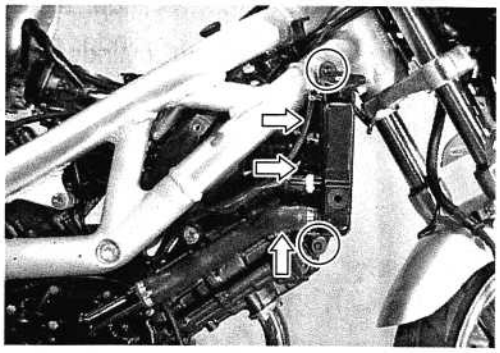

- Disconnect radiator inlet hose.
- Remove the radiator mounting bolts.

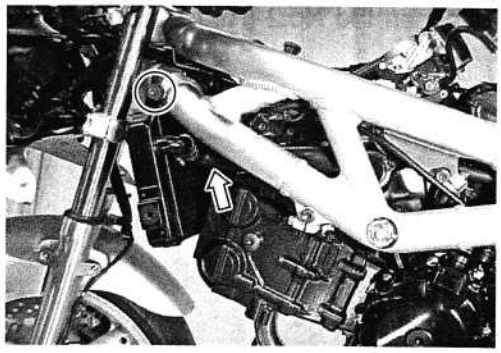

- Remove the radiator.

⚠ CAUTION

Be careful not to bent the radiator fin.

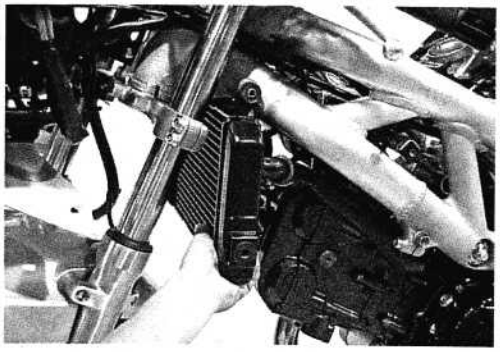

- Remove the carburetor. (☞ 4-18)

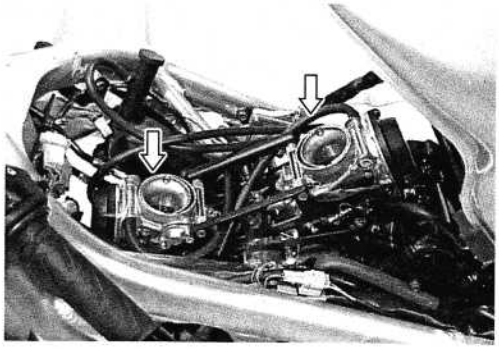

- Loosen the No.1 (Front) cylinder exhaust pipe bolt.
- Remove the No.1 (Front) cylinder exhaust pipe nuts ①.

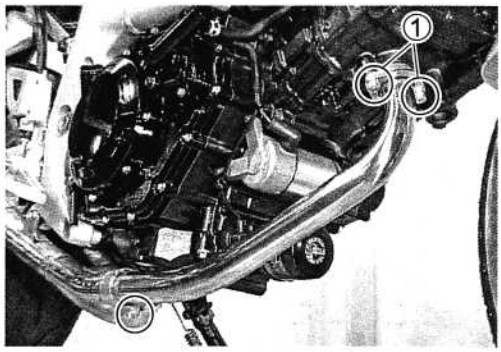

- Loosen the No.2 (Rear) cylinder exhaust pipe bolt.

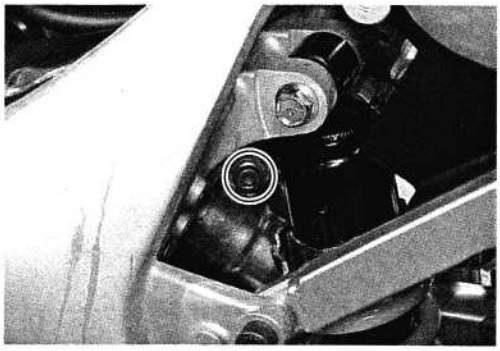

- Remove the muffler mounting bolt and nut.
- Remove the exhaust pipe mounting bolts and nut.
- Remove the exhaust pipe/muffler.

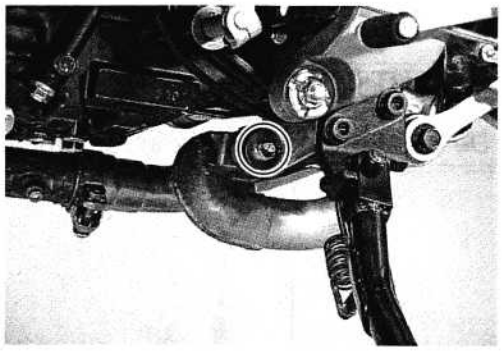

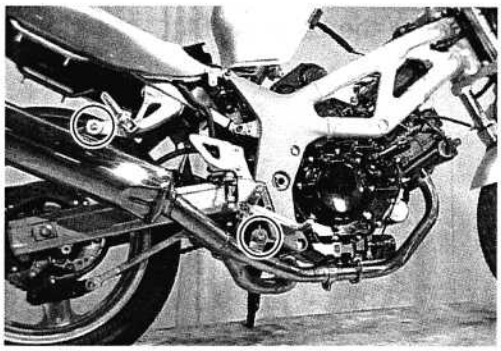

- Remove the engine sprocket cover ①.
- Remove the gearshift lever ②.

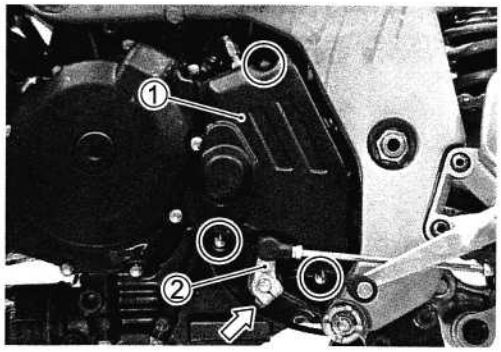

- Remove the clutch release return spring ③.

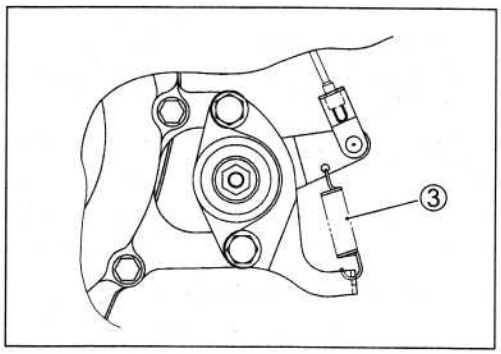

- Remove the clutch release assembly ④ and its support plate ⑤.

NOTE:
Slightly loosen the locknut ⑥ before removing the clutch release mounting bolts to facilitate subsequent installation.

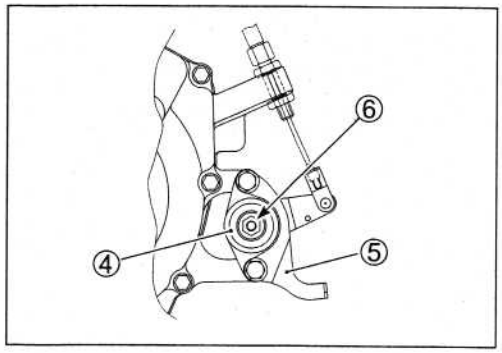

- Remove the clutch push rod ⑦.
- Remove the clutch cable from the generator cover.

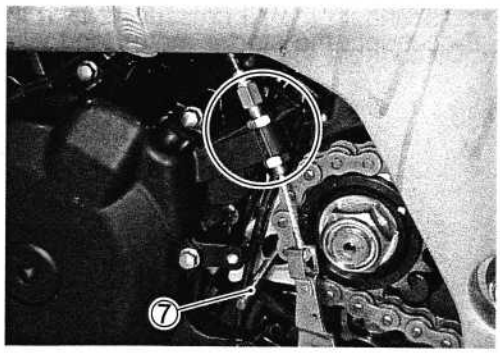

NOTE:
If it is necessary to replace the clutch cable or clutch release lever, pry up and bend down the stopper Ⓐ of the clutch release lever.

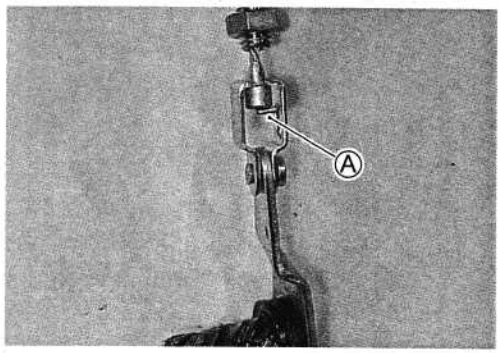

- Flatten the lock washer.
- Remove the engine sprocket nut ① and the lock washer .

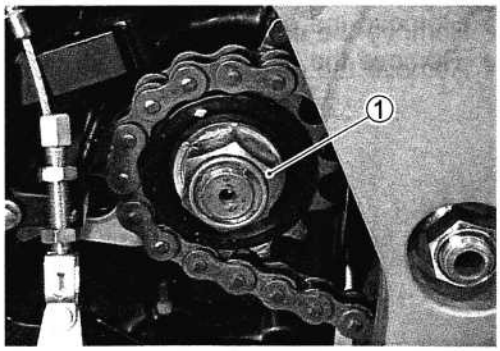

- Remove the cotter pin. (For E-03, 28, 33)
- Loosen the rear axle nut ②.
- Loosen the left and right chain adjusters ③.

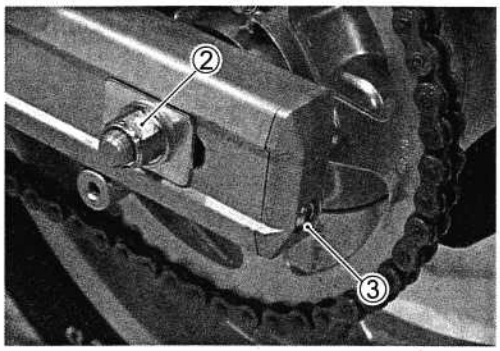

- Push the rear wheel front and make sure that the drive chain has enough slack.
- Disengage the drive chain with the rear sprocket.
- Remove the engine sprocket ④.

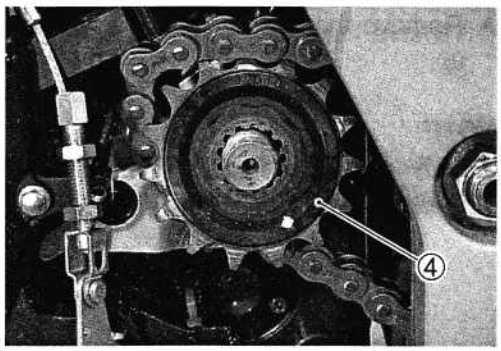

- Disconnect the oil pressure switch lead wire ⑤.
- Disconnect the starter motor lead wire ⑥.

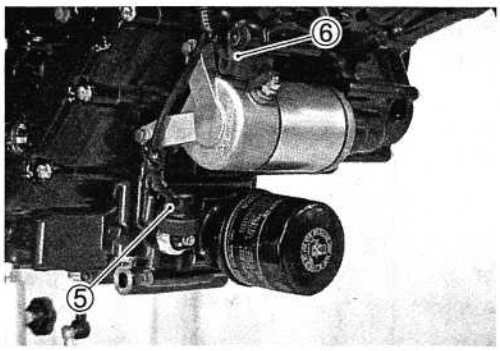

- Disconnect the No.2 (Rear) spark plug cap ①.
- Disconnect the engine coolant temperature switch lead wire ②.
- Disconnect the ground lead wire ③.

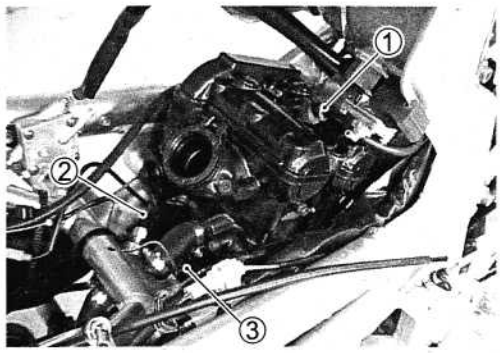

- Disconnect the No.1 (Front) spark plug cap ④.

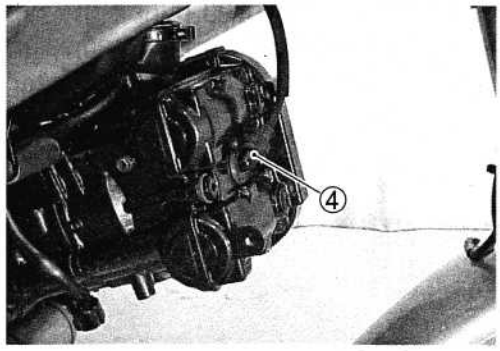

- Disconnect the generator lead wire coupler ⑤.
- Disconnect the signal generator lead wire coupler ⑥.

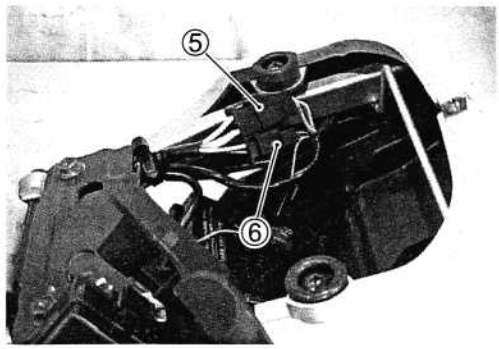

- Disconnect the neutral indicator light switch lead wire coupler ⑦.
- Remove the side-stand switch lead wire coupler ⑧.

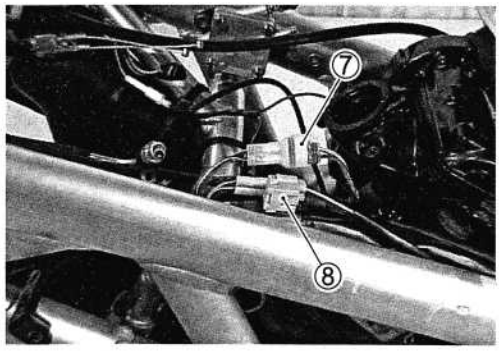

- Support the engine using an engine jack.

- Remove the engine mounting nuts ① and ②.

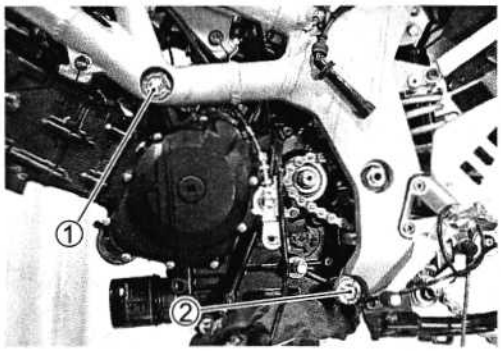

①, ② : Engine mounting nut
③, ④ : Engine mounting thrust adjuster lock nut
⑤, ⑥ : Engine mounting thrust adjuster

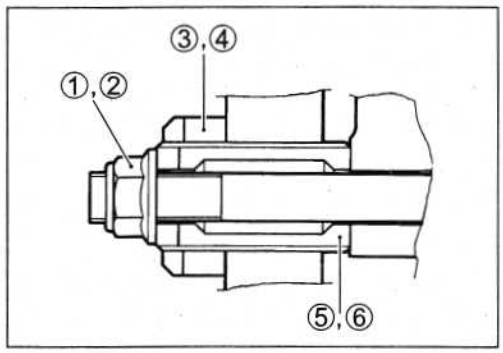

- Loosen the engine mounting thrust adjuster locknuts ③, ④ with the special tool.
- Loosen the engine mounting thrust adjusters ⑤, ⑥ fully with the special tool.

TOOL 09940-14990: Engine mounting thrust adjuster socket wrench

NOTE:
Do not remove the engine mounting bolts at this stage.

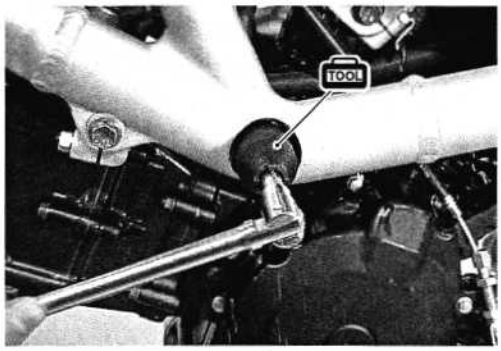

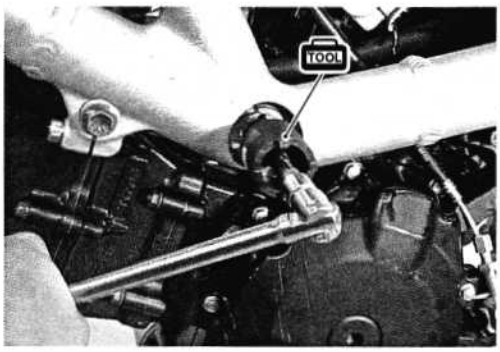

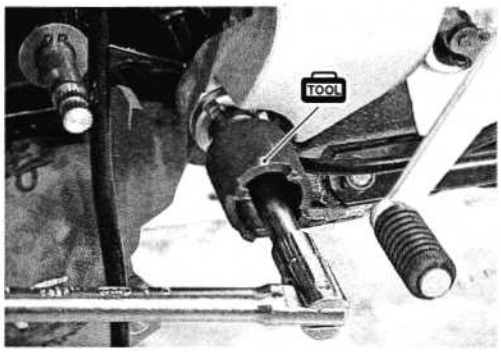

- Loosen the engine mounting clamp bolt ①.

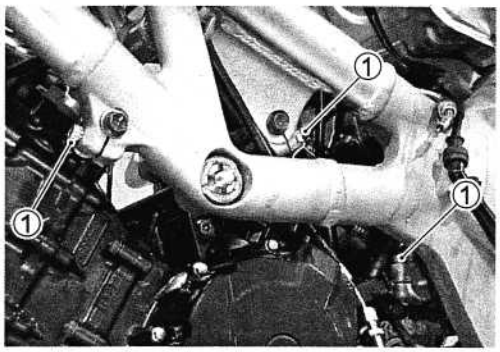

- Remove the No.1 (Front) left engine mounting bolt ② and the spacer ③.

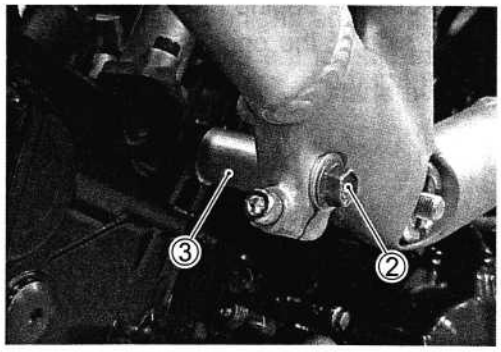

- Remove the No.1 (Front) right engine mounting bolt ④ and the spacer ⑤.

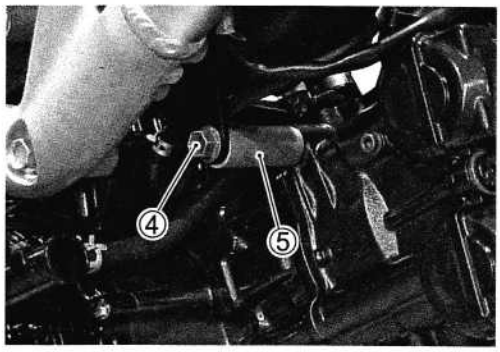

- Remove the No.2 (Rear) left engine mounting bolt ⑥ and the spacer ⑦.

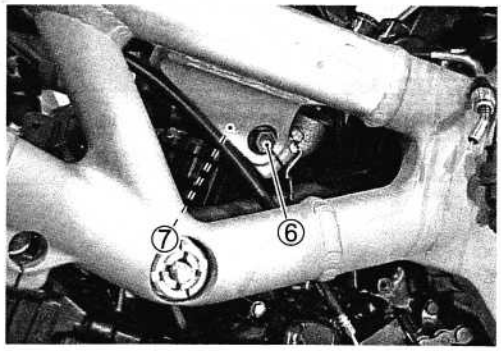

- Remove the No.2 (Rear) right engine mounting bolt ⑧.

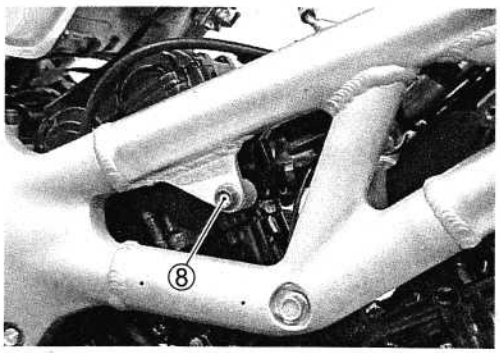

- Remove the engine mounting bolt ①.

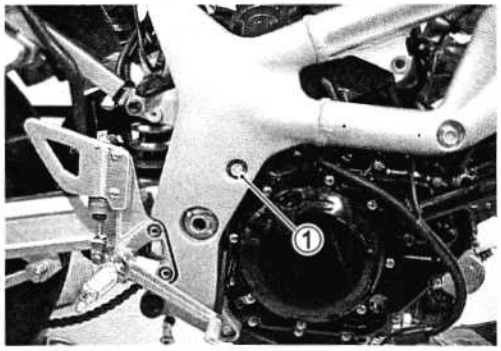

- Remove the engine mounting bolt ② and gradually lower the front side of the engine. Then take the drive chain ③ off the drive shaft.

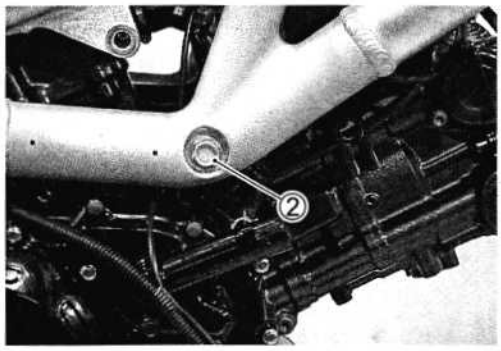

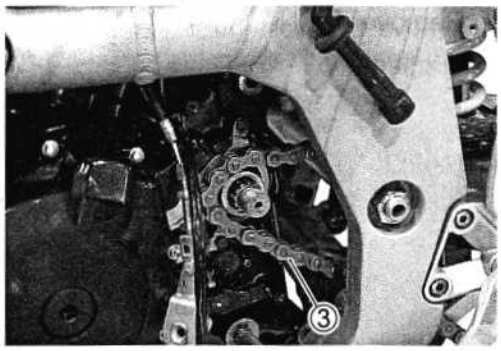

- Remove the engine mounting bolt ④ and lower the engine.

▲ CAUTION

Be careful not to contact the No.2 (Rear) exhaust pipe with the frame and swingarm.

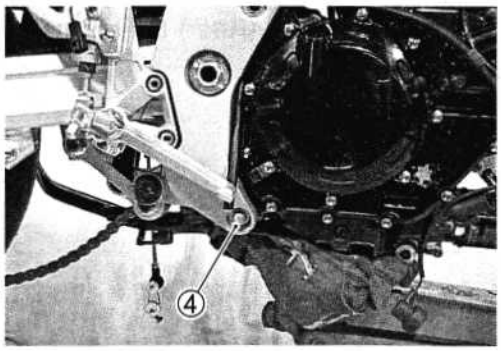

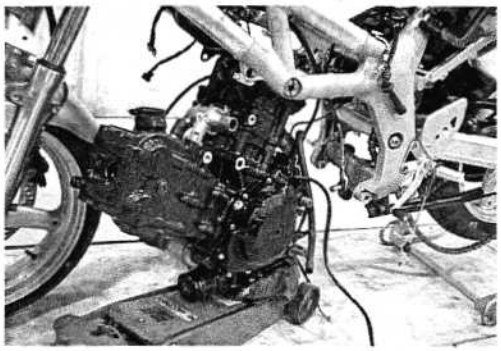

ENGINE INSTALLATION

Install the engine in the reverse order of engine removal.
Pay attention to the following point.

- Be careful not to damage the frame and engine when installing the engine.

- Before installing the engine, install the spacer ①.

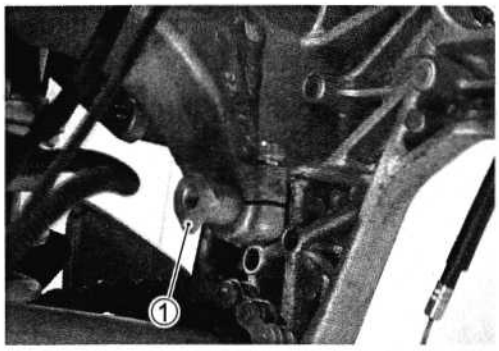

- Before installing the engine, install the engine mounting thrust adjusters ②, ③.

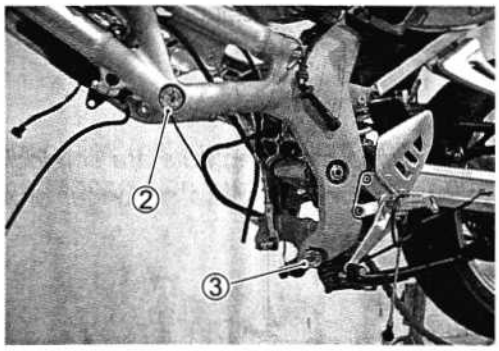

- Gradually raise the rear side of the engine assembly, and then put the drive chain ④ on the driveshaft.

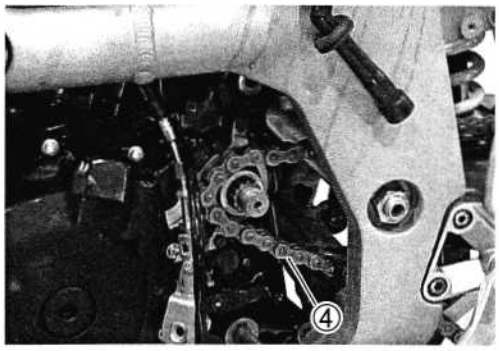

- Align the spacer flange Ⓐ to the crankcase groove.
- Install all engine mounting bolts and tighten them temporarily.

- Tighten the engine mounting thrust adjusters to the specified torque with the special tool.

TOOL 09940-14990: Engine mounting thrust adjuster socket wrench

Engine mounting thrust adjuster: 10 N·m (1.0 kgf·m, 7.0 lb-ft)

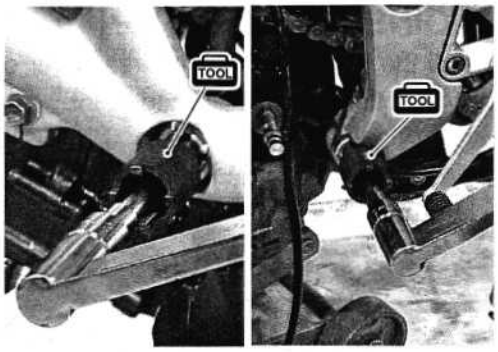

- Tighten the engine mounting thrust adjuster lock nuts to the specified torque with the special tool.

Engine mounting thrust adjuster locknut: 45 N·m (4.5 kgf·m, 32.5 lb-ft)

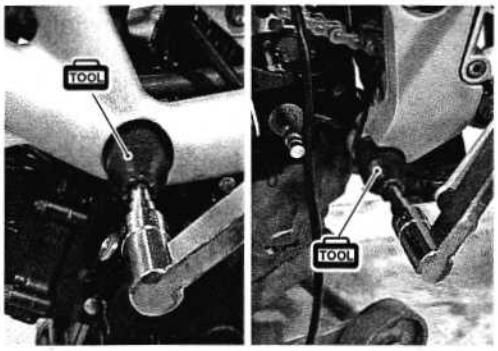

- Tighten all engine mounting bolts or nuts to the specified torque. (☞ 3-15)

NOTE:
The engine mounting nuts are self-locking. Once the nuts have been removed, they are no longer of any use.

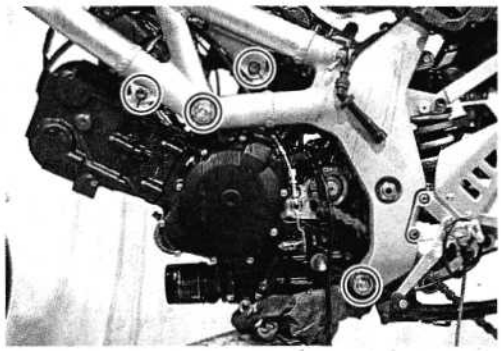

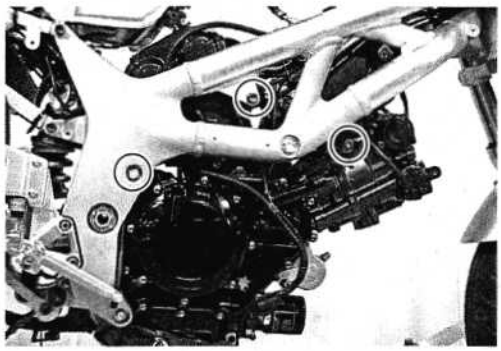

- Tighten all engine mounting clamp bolts to the specified torque. (☞ 3-15)

NOTE:
After tightening the engine mounting bolt or nut to the specified torque, tighten its clamp bolt.

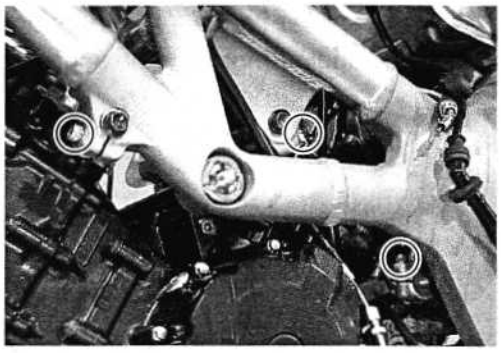

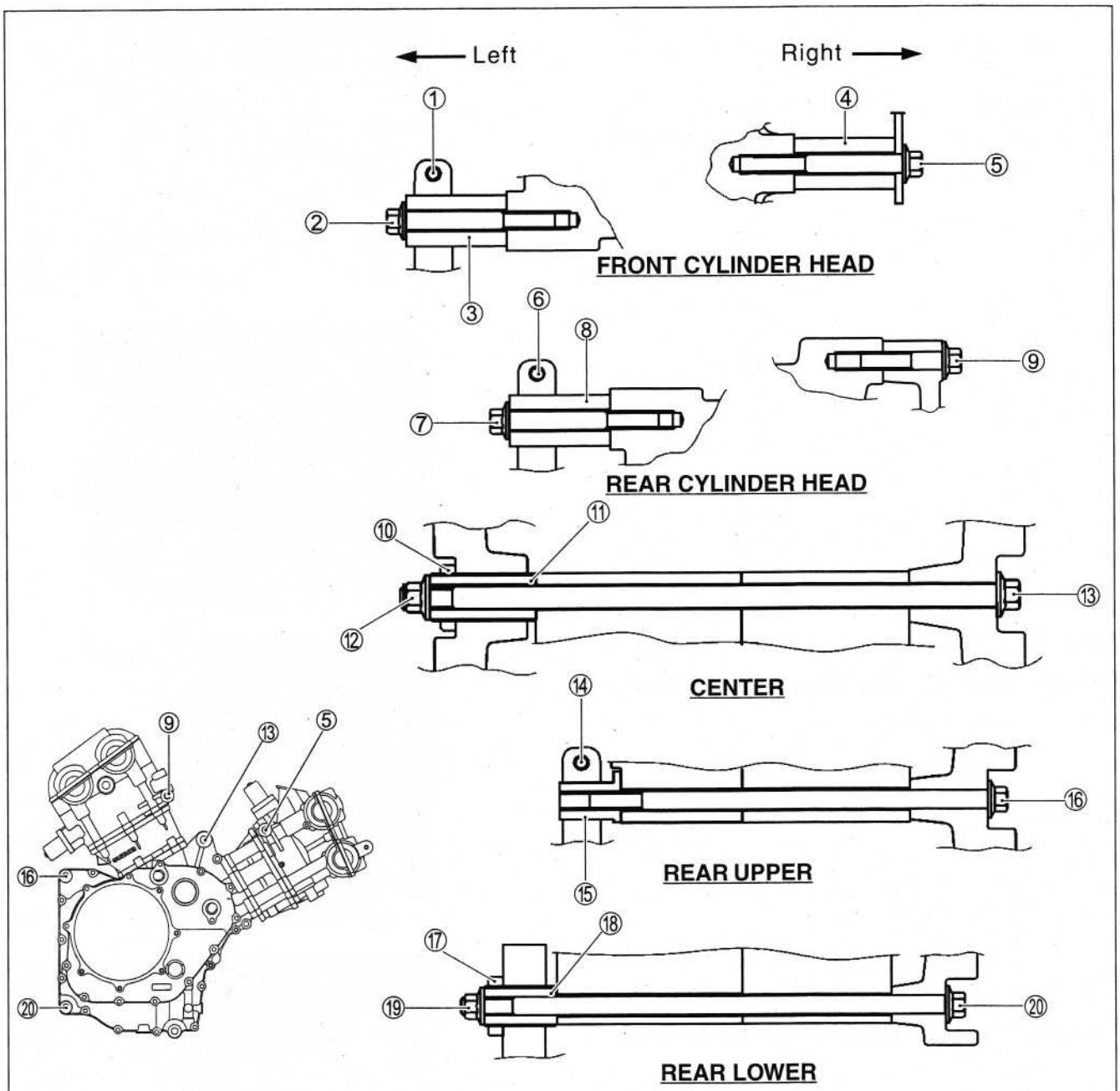

ITEM	N·m	kgf·m	lb-ft
① ⑥ ⑭	23	2.3	16.5
②⑤⑦⑨⑯⑲	55	5.5	40.0
⑩	45	4.5	32.5
⑪	10	1.0	7.3
⑫	93	9.3	67.5
⑰	45	4.5	32.5
⑱	10	1.0	7.3

LENGTH

ITEM		mm	in
Bolt	①⑥⑭	30	1.18
	②⑤⑦	80	3.15
	⑨	55	2.17
	⑬	310	12.20
	⑯	215	8.46
	⑳	260	10.24
Spacer	③④⑧	54	2.13
	⑮	33	1.30
Adjuster	⑪	57	2.24
	⑱	39	1.54

- When fitting the spark plug caps ①, the triangle marks Ⓐ on the water-proof covers should be faced to each cylinder exhaust side.
- Route wiring harness, cables and hoses properly referring to the sections for wire routing, cable routing and hose routing. (☞ 8-13)

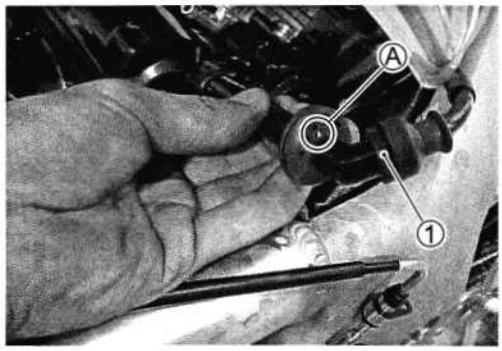

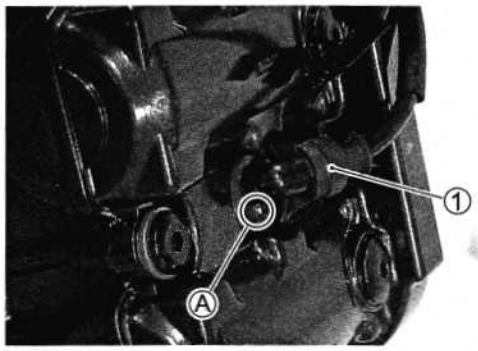

- Tighten the engine sprocket nut ② to the specified torque.

Engine sprocket nut: 145 N·m (14.5 kgf·m, 105 lb-ft)

- Bend the lock washer.

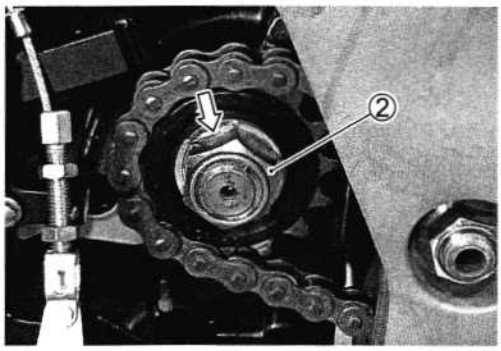

- Adjust the drive chain slack. (☞ 2-21)
- Tighten the rear axle nut to the specified torque.

Rear axle nut: 65 N·m (6.5 kgf·m, 47.0 lb-ft)

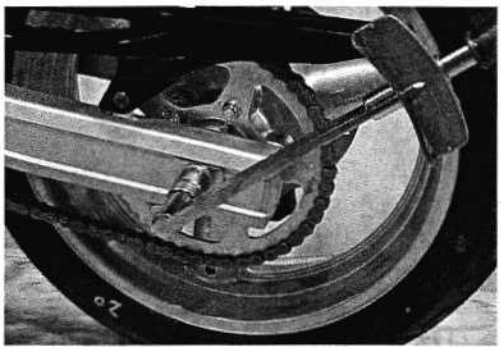

- Apply grease to the clutch push rod and install it.

99000-25030: SUZUKI SUPER GREASE "A"

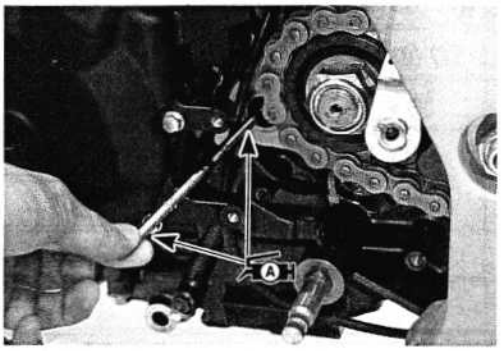

- Install the clutch cable to the generator cover and put the clutch release lever onto the push rod.
- Adjust the clutch release lever end angle by turning the nuts ①.

Ⓐ: 80° – 85°

NOTE:
Adjust the clutch release lever end angle while pulling the cable.

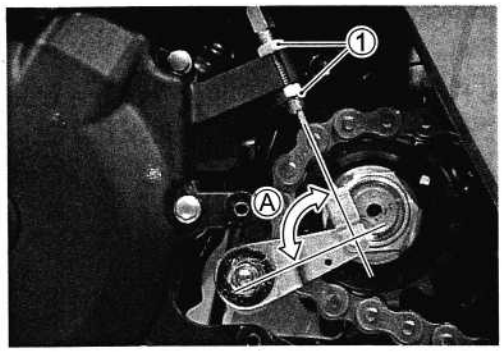

- Apply grease to the clutch release lever.

99000-25030: SUZUKI SUPER GREASE "A"

NOTE:
Loosen the clutch release screw ② and its locknut ③ fully before installing the clutch release assembly.

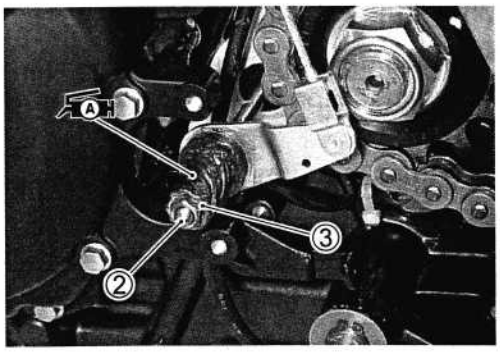

- Turn in the clutch release assembly.

NOTE:
Face the portion Ⓐ of the clutch release assembly to outside.

- Install the clutch release assembly and its support plate ④.
- Install the clutch release return spring ⑤.

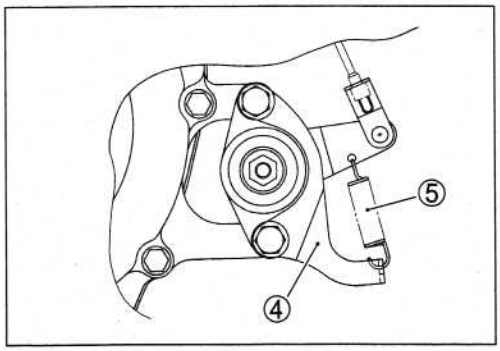

- Slowly turn in the clutch release screw ① until resistance is felt.
- From this position, turn out the clutch release screw ① 1/4 rotation and tighten the lock nut ②.

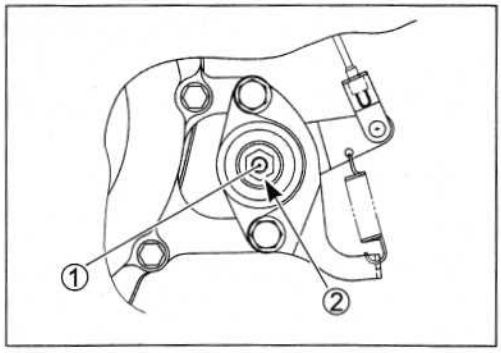

- Install the exhaust pipe/muffler.

Exhaust pipe bolt/nut ③: 23 N·m (2.3 kgf·m, 16.5 lb-ft)
Exhaust pipe mounting bolt ④: 23 N·m (2.3 kgf·m, 16.5 lb-ft)
Muffler mounting nut ⑤: 23 N·m (2.3 kgf·m, 16.5 lb-ft)

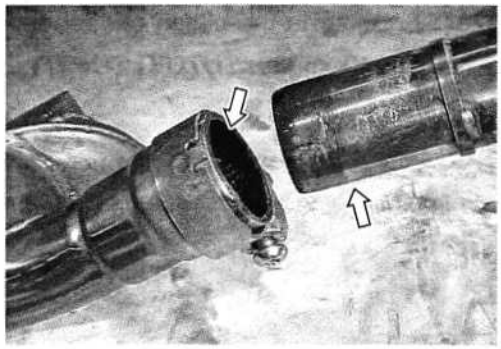

▲ CAUTION

Replace the gaskets with new ones.

NOTE:
Apply gas sealer to inside and outside of the exhaust pipe connector.

EXHAUST GAS SEALER: PERMATEX 1372

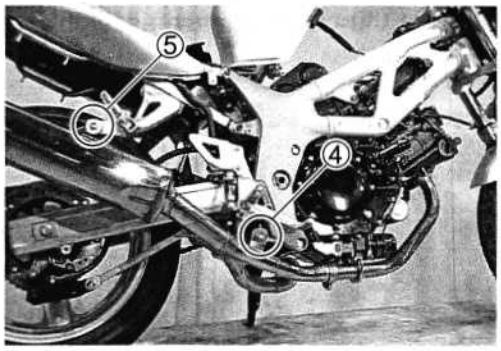

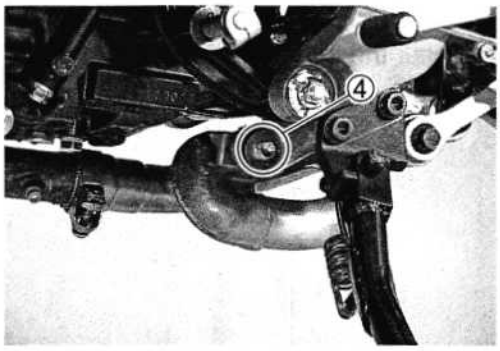

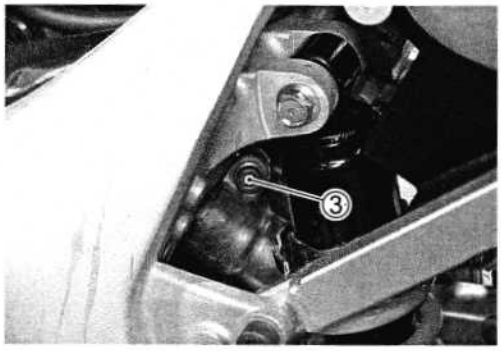

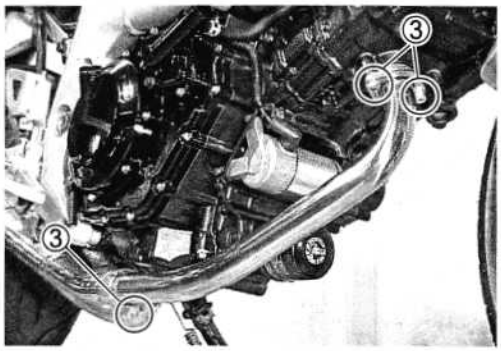

- Install the carburetor. (☞ 4-30)

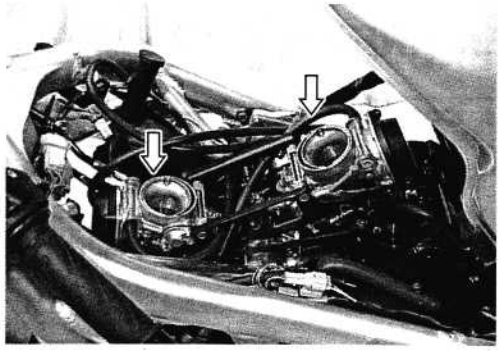

- Install the radiator. (☞ 5-6)

- Adjust the following items.

* Engine oil (☞ 2-13)
* Engine coolant (☞ 2-18)
* Throttle cable play (☞ 2-16)
* Clutch cable play (☞ 2-17)
* Idling adjustment (☞ 2-15)
* Carburetor synchronization (☞ 4-35)
* Drive chain slack (☞ 2-21)
* Gear shaft lever height (☞ 8-43)

ENGINE DISASSEMBLY

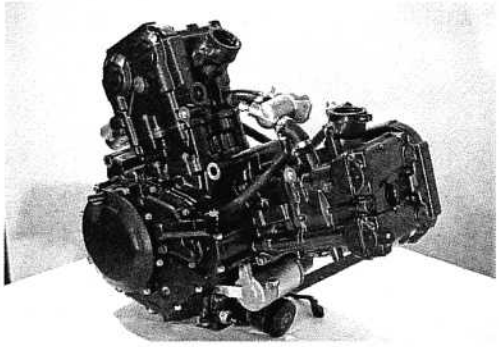

▲ CAUTION

Identify the position of each removed part. Organize the parts in their respective groups (e.g., intake, exhaust) so that they can be reinstalled in their original positions.

- Remove the spark plugs. (☞ 2-5)
- Disconnect the ground lead wire.
- Disconnect the crankcase breather hose ①.

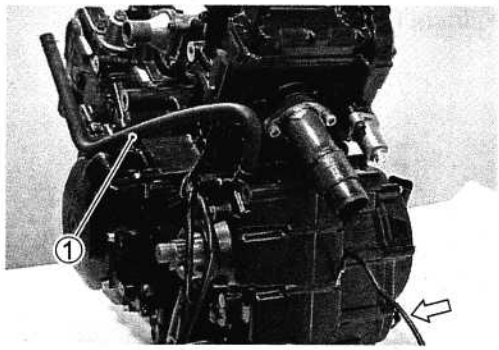

- Remove the hose ②.

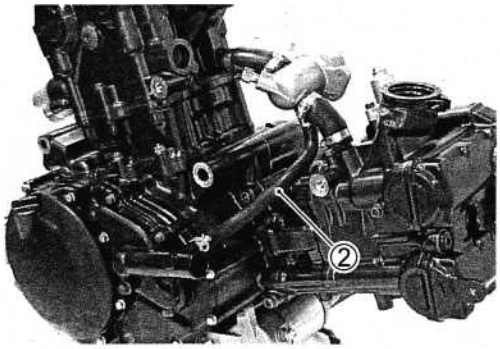

- Remove the thermostat case ③ with the hoses ④.

NOTE:
Refer to the section 5 for their servicing.

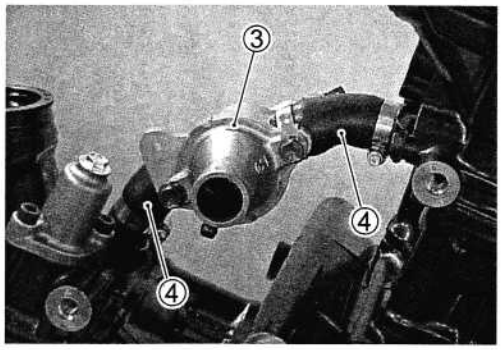

- Remove the valve timing inspection plug ⑤ and the generator cover plug ⑥.

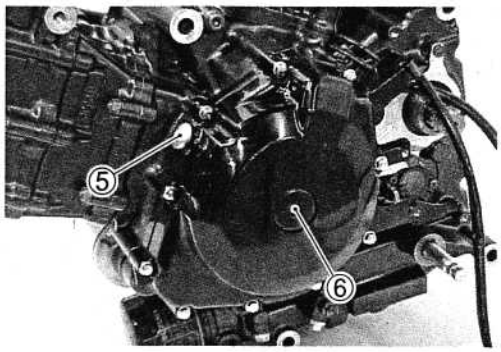

CYLINDER HEAD COVER

- Remove the front and rear cylinder head covers and their gaskets.

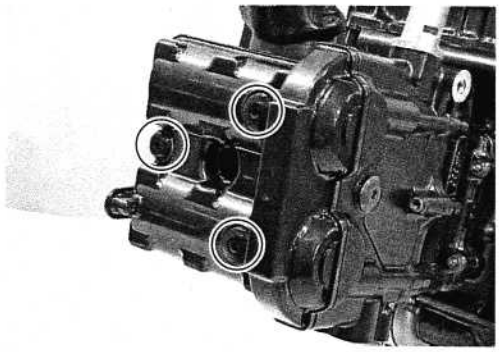

NO.1 (FRONT) CAMSHAFTS

- Turn the crankshaft to bring the "| F" line Ⓐ on generator rotor to the index mark Ⓑ of the valve inspection hole and also to bring the cams to the position as shown.

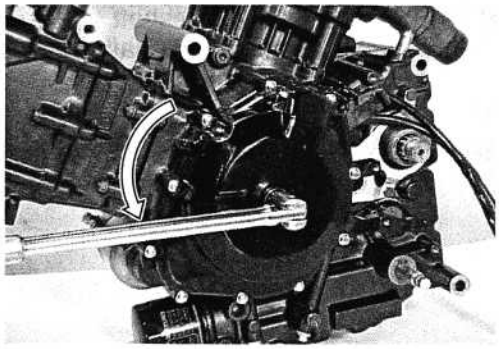

NOTE:

* *At the above condition, the No.1 (Front) cylinder is at TDC of compression stroke.*
* *Before removing the camshafts, inspect the tappet clearance. (☞ 2-8)*

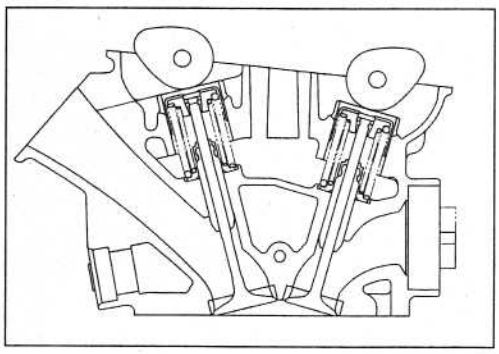

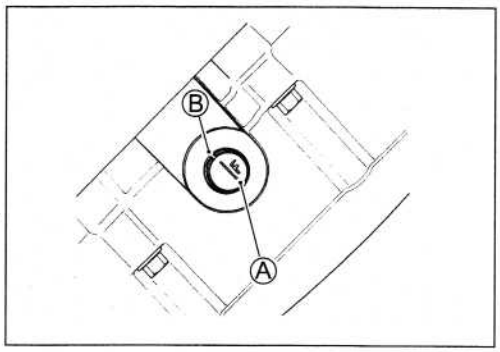

- Remove the cam chain guide ①.

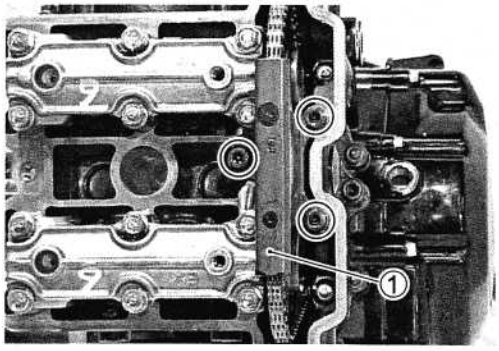

- Remove the cam chain tension adjuster.

NOTE:
Loosen the cam chain tension adjuster bolt ② to facilitate later reassembly.

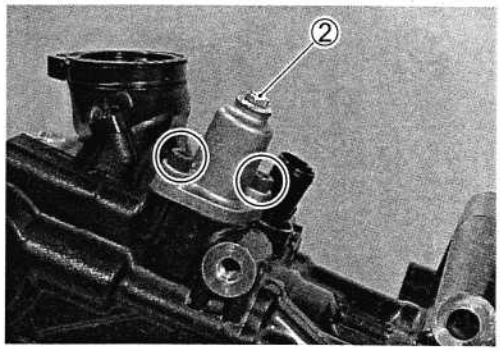

- Remove the gasket.

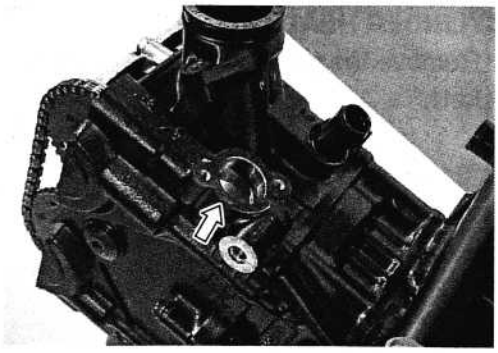

- Remove the intake camshaft housing ①.
- Remove the exhaust camshaft housing ②.

NOTE:
Mark the cylinder location as "F" to the camshaft housings.

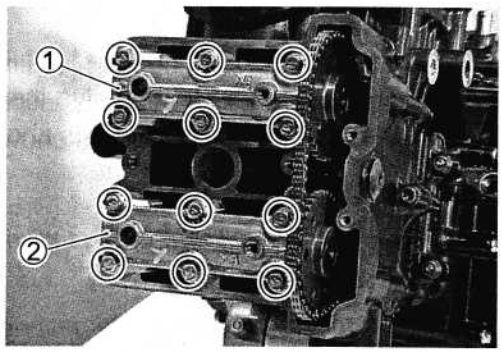

- Remove the dowel pins ③.

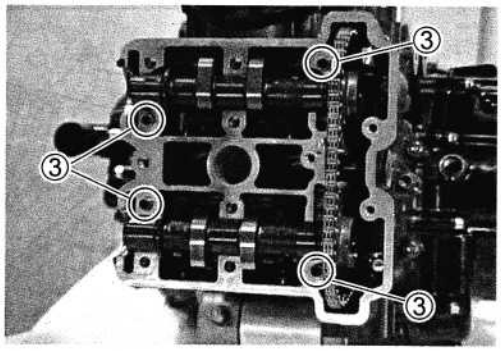

- Remove the intake camshaft ④.
- Remove the exhaust camshaft ⑤.

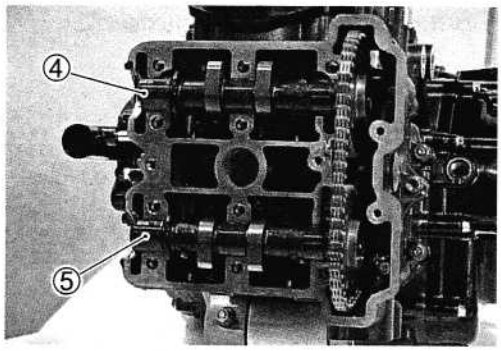

NO.2 (REAR) CAMSHAFTS

- Turn the crankshaft to bring the "| F" line mark Ⓐ on generator rotor to the index mark Ⓑ of the valve inspection hole and also to bring the cams to the position as shown.

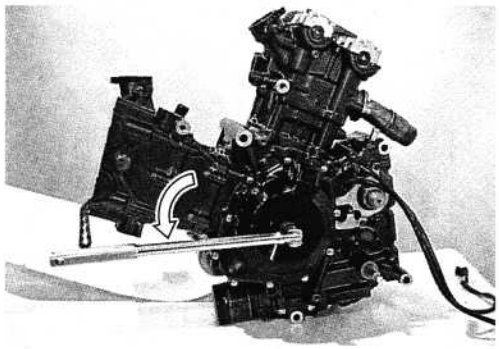

NOTE:

* *At the above condition, the No.2 (Rear) cylinder is at ATDC 90° on expansion stroke.*
* *Before removing the camshafts, inspect the tappet clearance. (☞ 2-8)*

⚠ CAUTION

Pull the front cam chain upward, or the chain will be caught between the crankcase and the No.1 cam drive idle gear/sprocket when turning the crankshaft.

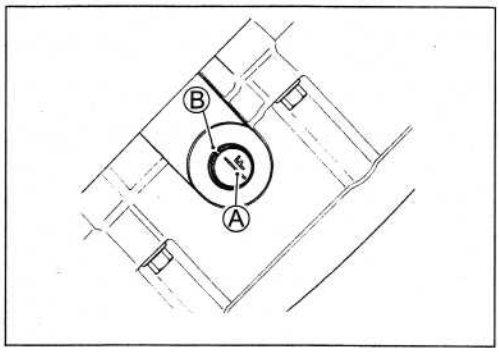

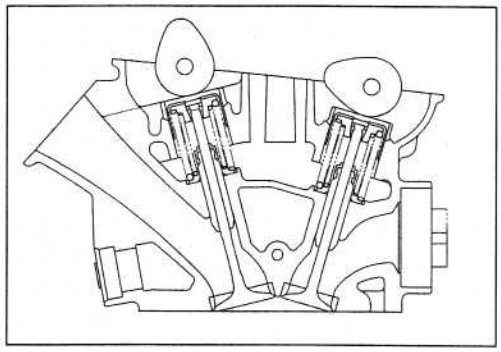

- Remove the cam chain guide ①.

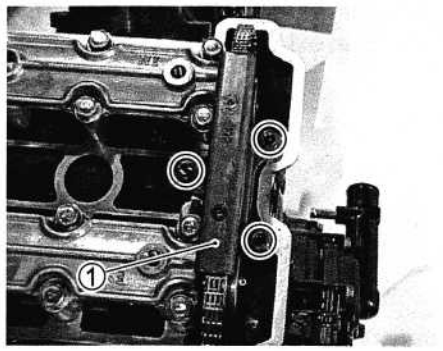

- Remove the cam chain tension adjuster.

NOTE:
Loosen the cam chain tension adjuster bolt ② to facilitate later reassembly.

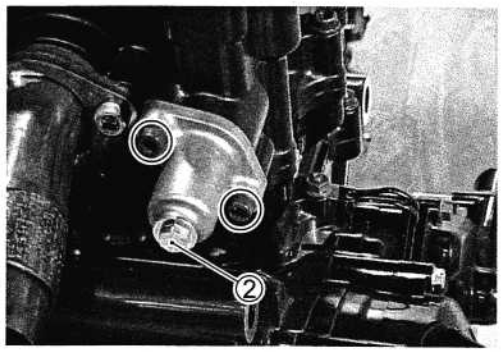

- Remove the gasket.

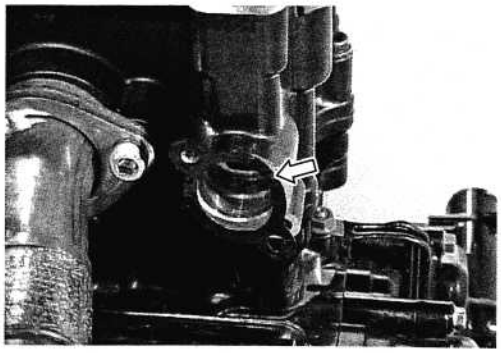

- Remove the intake camshaft housing ①.
- Remove the exhaust camshaft housing ②.

NOTE:
Mark the cylinder location as "R" to the camshaft housings.

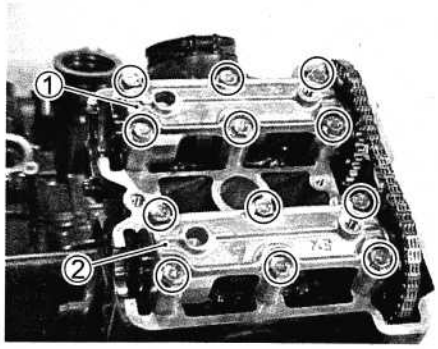

- Remove the dowel pins ③.

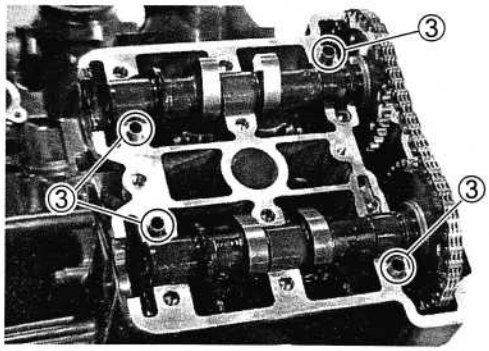

- Remove the intake camshaft ④.
- Remove the exhaust camshaft ⑤.

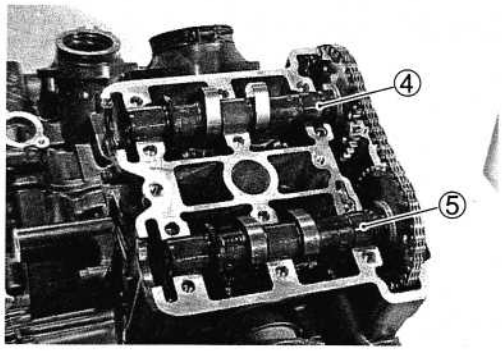

NO.1 (FRONT) CYLINDER HEAD

- Remove the cylinder head side bolt ① and its gasket ②.

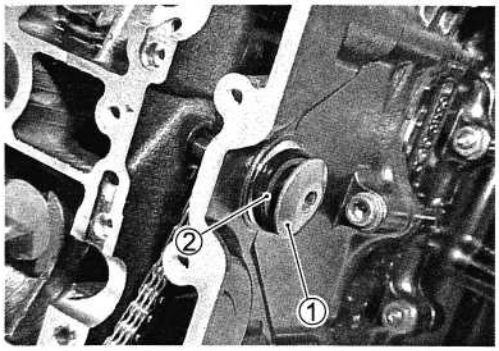

- Remove the cylinder head bolt (M6) ③.
- Loosen the cylinder nuts ④.

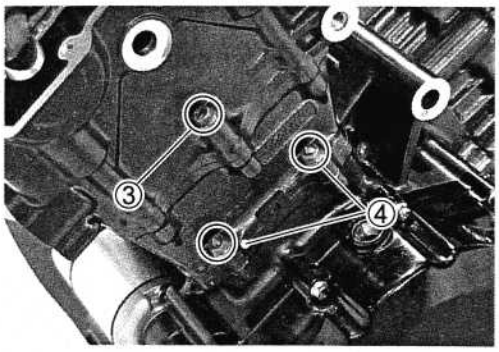

- Remove the cylinder bolts (M6) ⑤.

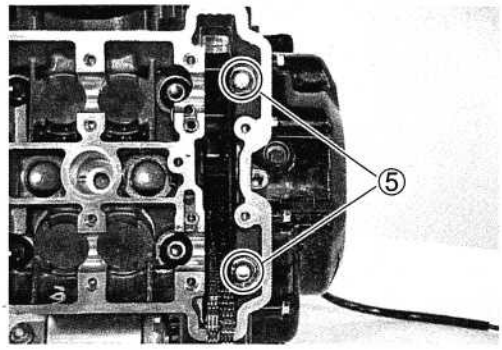

- Remove the cylinder head bolts and washers.

NOTE:
When loosening the cylinder head bolts, loosen each bolt little by little diagonally.

- Remove the cylinder head.

NOTE:
Refer to page 3-43 for cylinder head servicing.

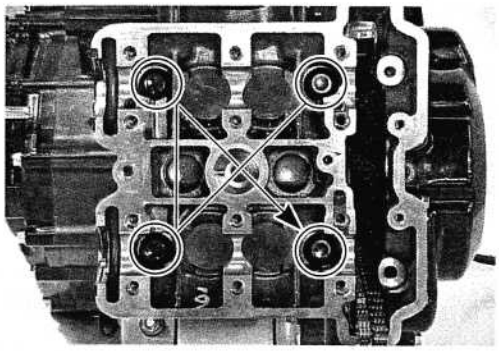

- Remove the cylinder head gasket ⑥, dowel pins ⑦ and cam chain guide ⑧.

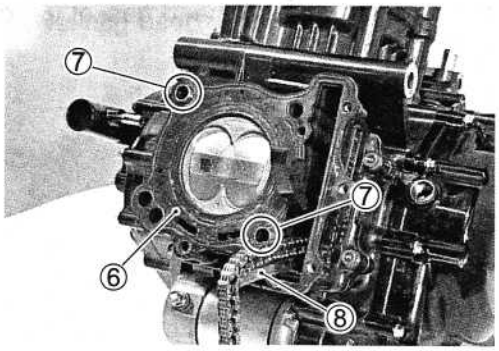

NO.2 (REAR) CYLINDER HEAD

- Remove the cylinder head side bolt ① and its gasket ②.

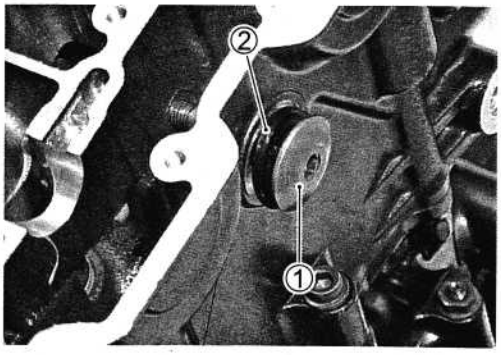

- Remove the cylinder head bolt (M6) ③.
- Loosen the cylinder nuts ④.

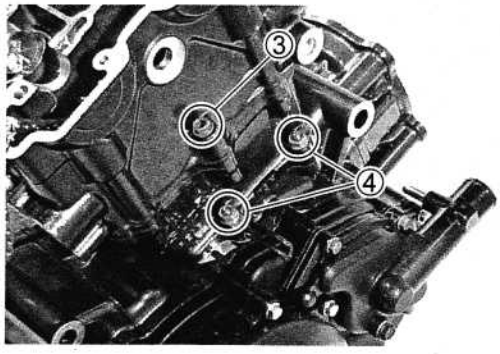

- Remove the cylinder bolts (M6) ⑤.

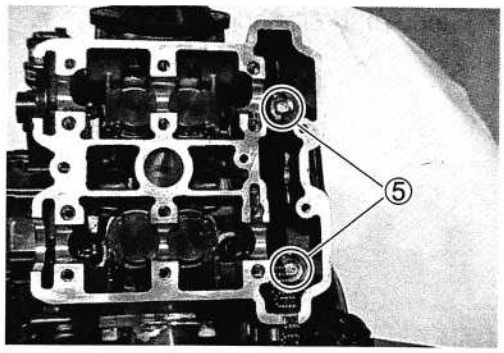

- Remove the cylinder head bolts and washers.

NOTE:
When loosening the cylinder head bolts, loosen each bolt little by little diagonally.

- Remove the cylinder head.

NOTE:
Refer to page 3-43 for cylinder head servicing.

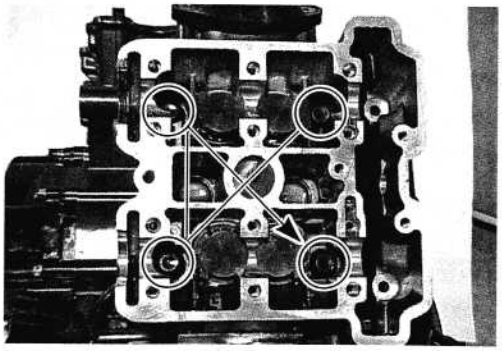

- Remove the cylinder head gasket ⑥, dowel pins ⑦ and cam chain guide ⑧.

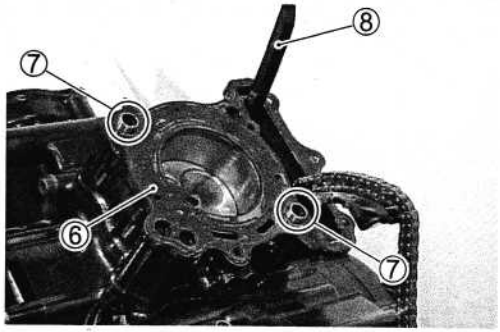

NO.1 (FRONT) CYLINDER

- Remove the cylinder nuts ①.
- Remove the cylinder.

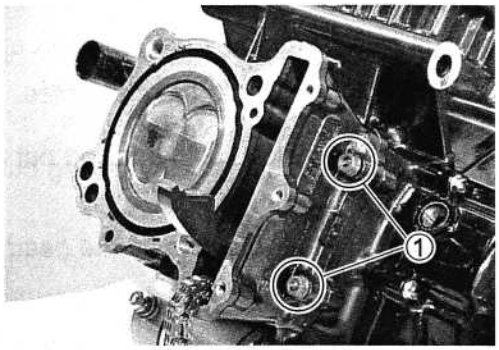

- Remove the cylinder base gasket ② and the dowel pins ③.
- Remove the oil jet (#14) ④.

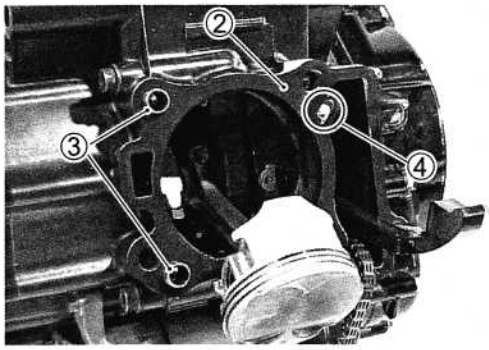

NO.2 (REAR) CYLINDER

- Remove the cylinder nuts ① and clamp ②.
- Remove the cylinder.

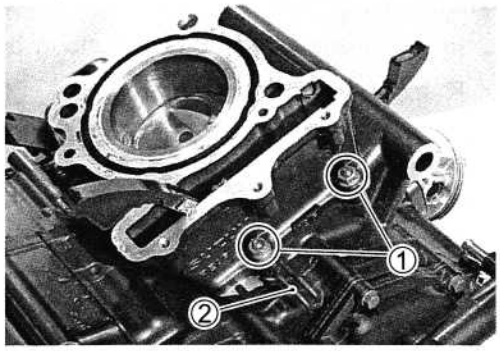

- Remove the cylinder base gasket ③ and the dowel pins ④.
- Remove the oil jet (#14) ⑤.

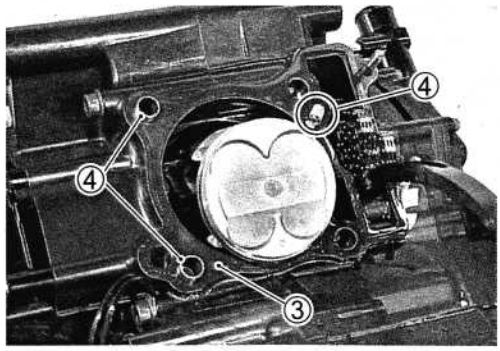

PISTON

- Place a clean rag over the cylinder base so as not to drop the piston pin circlip into the crankcase.
- Remove the piston pin circlips ①.
- Remove the pistons ② by driving out the piston pins.

NOTE:
Scribe the cylinder number on the head of the piston.

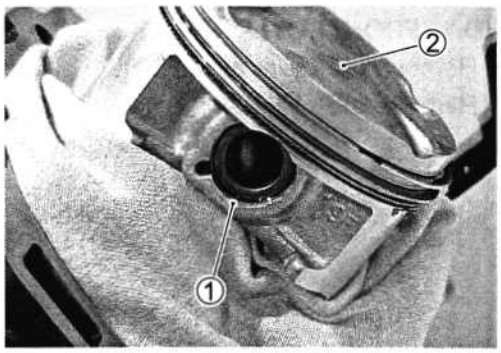

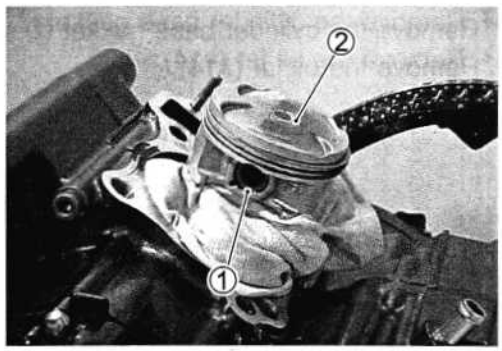

STARTER MOTOR

- Remove the starter motor mounting bolts and the clamp.
- Remove the starter motor ①.

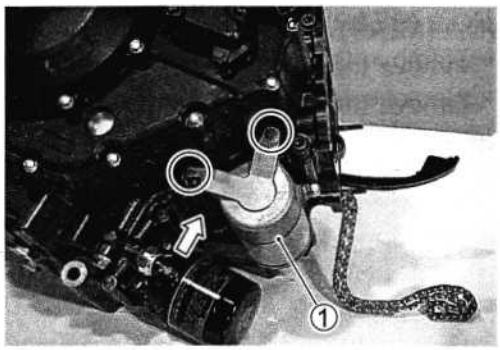

OIL FILTER

- Remove the oil filter ① with the special tool. (☞ 2-14)

TOOL 09915-40610: Oil filter wrench

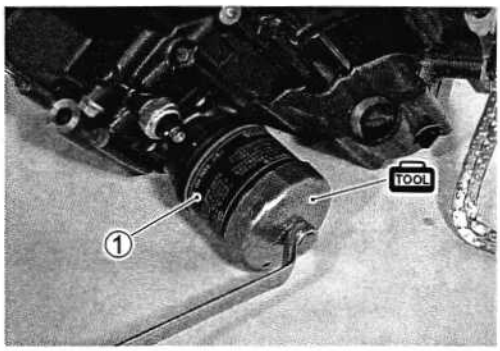

GENERATOR COVER

- Remove the generator cover ①.

NOTE:
Refer to the page 3-85 for the generator cover servicing.

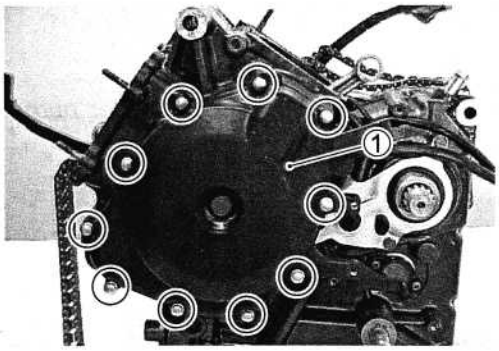

- Remove the gasket ② and the dowel pins ③.

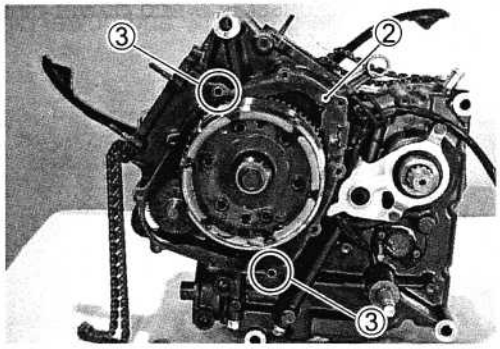

- Remove the starter idle gear ④ and its shaft ⑤.

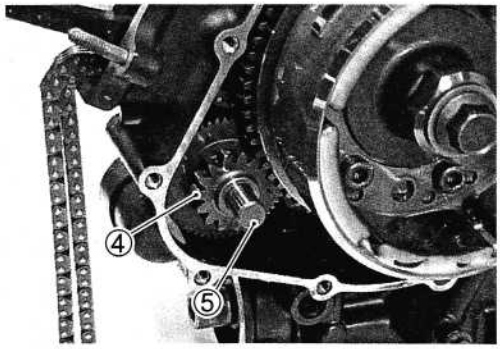

CLUTCH COVER

- Remove the clutch outer cover ①.

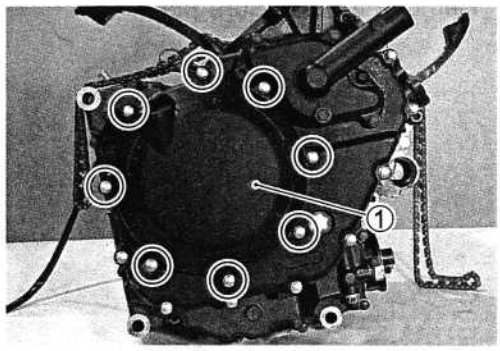

- Remove the O-ring ②.

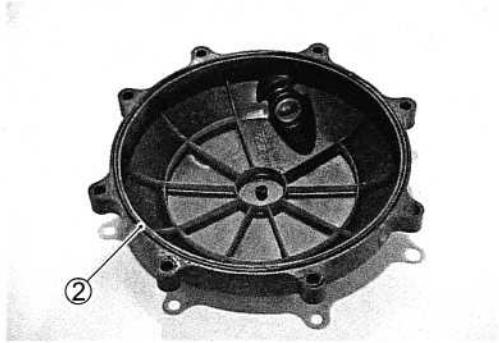

- Remove the clutch inner cover ①.

NOTE:
Refer to the page 5-12 for water pump servicing.

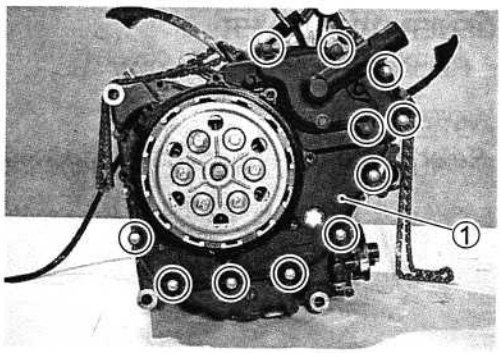

- Remove the gasket ② and dowel pins ③.

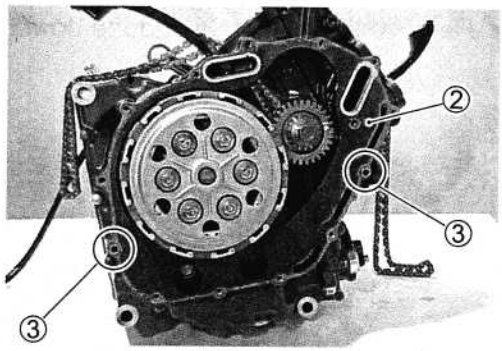

CLUTCH

- Hold the generator rotor with the special tool.

TOOL 09930-44530: Rotor holder

- Remove the clutch springs.

NOTE:
Loosen the clutch spring set bolts little by little and diagonally.

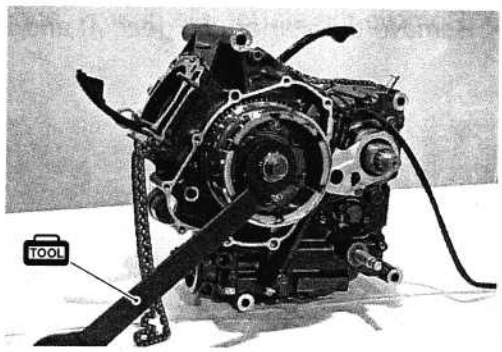

- Remove the pressure plate ①.

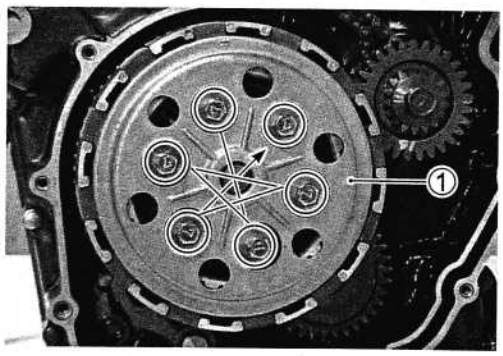

- Remove the clutch push piece ②, the bearing ③ and the thrust washer ④.

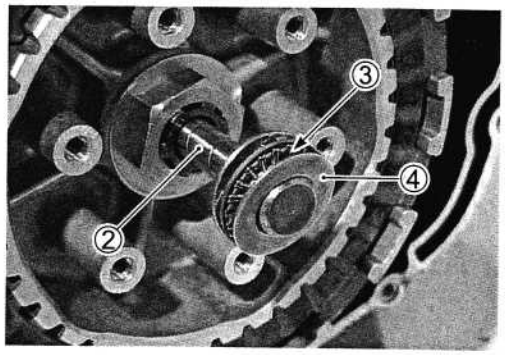

- Remove the clutch push rod ①.

NOTE:
If it is difficult to pull out the push rod ①, use a magnetic hand or a wire.

- Remove the clutch drive and driven plates.

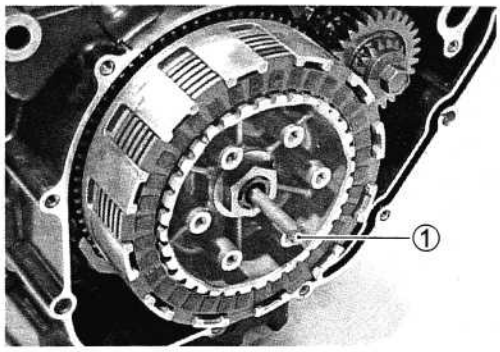

- Remove the clutch drive plate (installed dampers) ②.

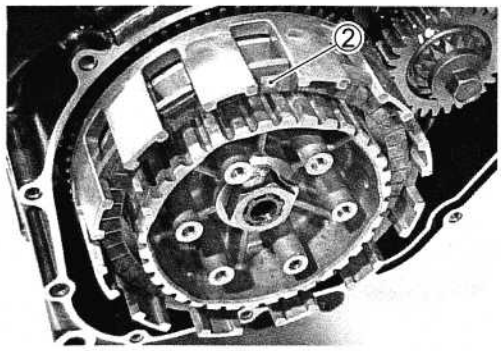

- Flatten the clutch sleeve hub nut lock washer.

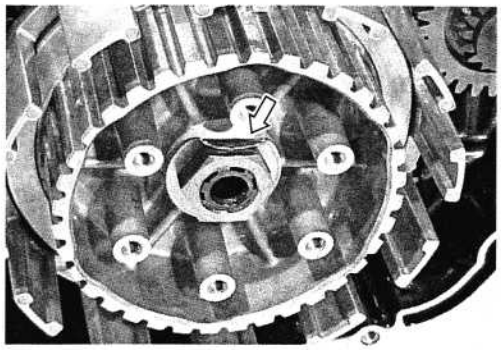

- Hold the clutch sleeve hub with the special tool.

TOOL 09920-53740: Clutch sleeve hub holder

- Remove the clutch sleeve hub nut.

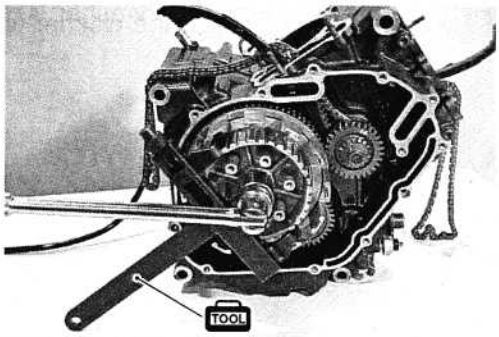

- Remove the lock washer ⑤.
- Remove the clutch sleeve hub ⑥.

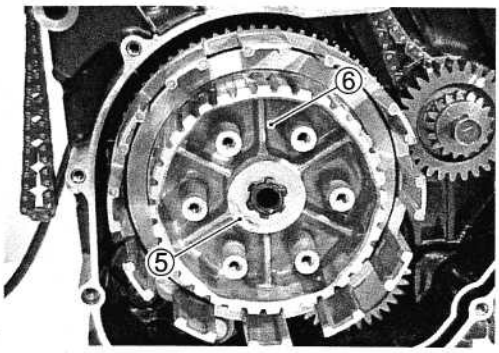

- Remove the thrust washer ①.
- Remove the primary driven gear assembly ②.

NOTE:
Refer to the page 3-76 for the primary driven gear assembly servicing.

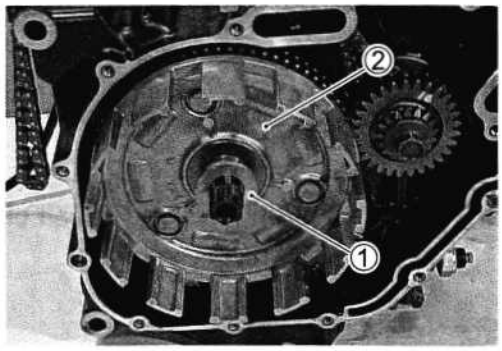

- Remove the spacer ③ and the washer ④.

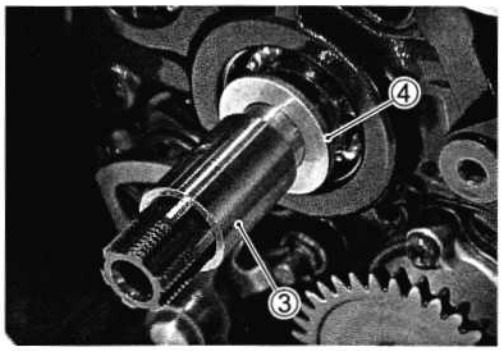

OIL PUMP

- Remove the circlip ①.
- Remove the oil pump driven gear ②.

NOTE:
Do not drop the circlip ①, the pin ③ and the washer ④ into the crankcase.

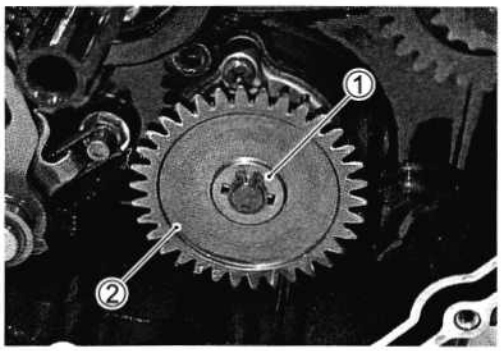

- Remove the pin ③ and the washer ④.

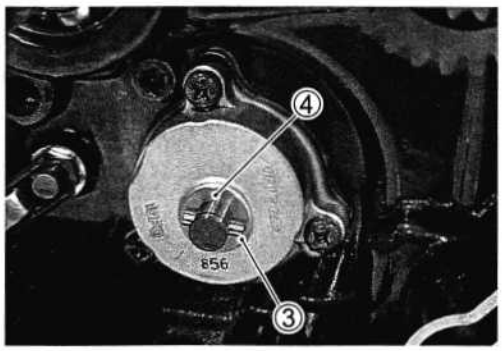

- Remove the oil pump ⑤.

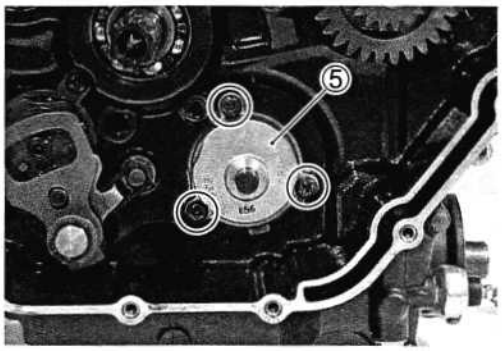

GEARSHIFT SYSTEM

- Remove the circlip ① and the washer ②.

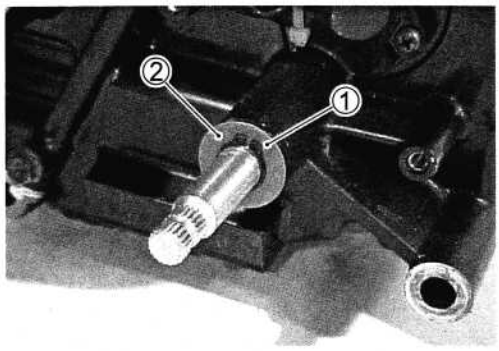

- Remove the gearshift shaft assembly ③ and the washer ④.

NOTE:
Refer to the page 3-77 for the gearshift shaft servicing.

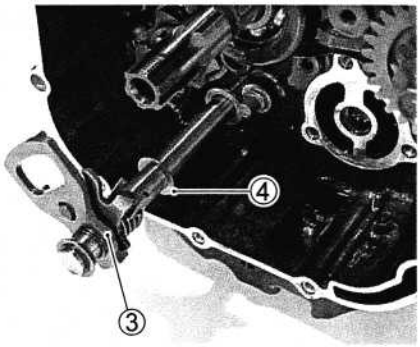

- Remove the gearshift cam plate bolt ⑤.
- Remove the gearshift cam plate ⑥.

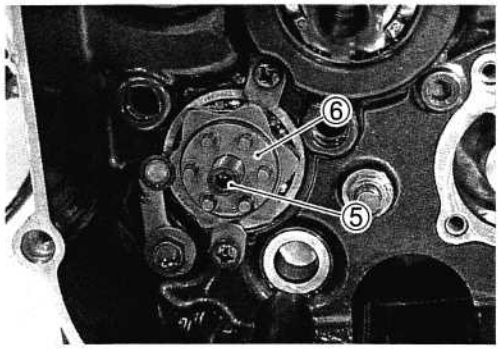

- Remove the following items.

⑦ Gearshift cam stopper
⑧ Gearshift cam stopper bolt
⑨ Gearshift cam stopper spring
⑩ Washer

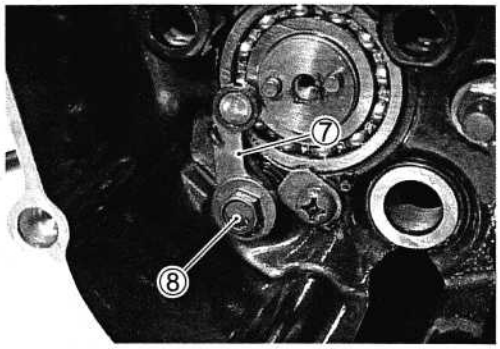

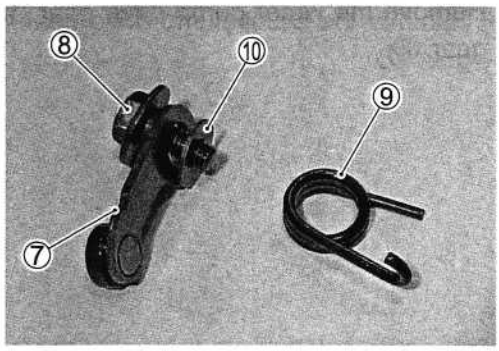

OIL PIPE

- Remove the oil pipe stopper ①.

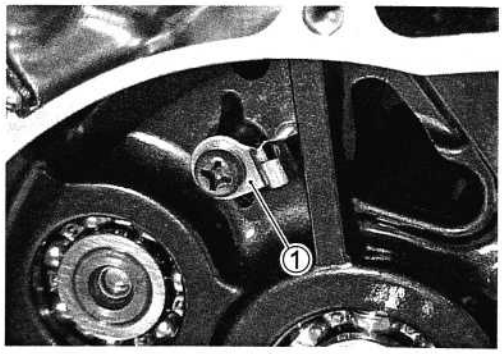

- Remove the oil pipe ②.

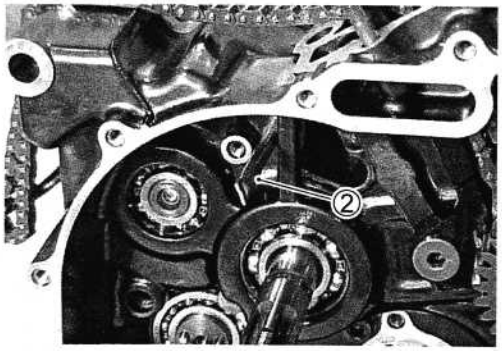

PRIMARY DRIVE GEAR

- Hold the generator rotor (crankshaft) with the special tool.

TOOL 09930-44530: Rotor holder

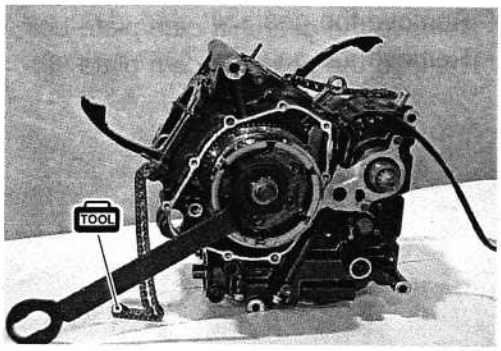

- Remove the primary drive gear bolt.

⚠ CAUTION

This bolt has left-hand thread. Turning it counterclockwise may cause damage.

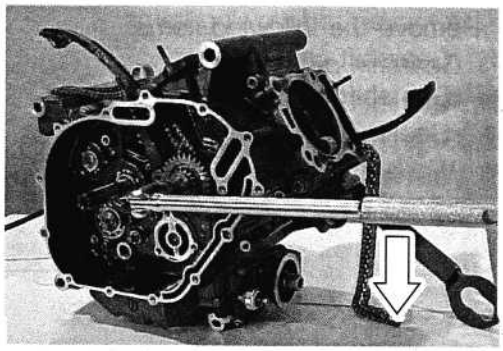

- Remove the water pump drive gear ① and the primary drive gear ②.

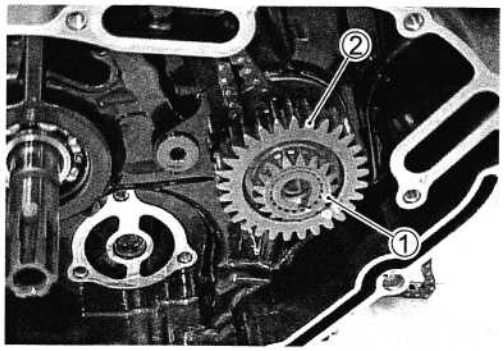

NO.2 (REAR) CAM CHAIN

- Remove the cam chain tensioner ①.

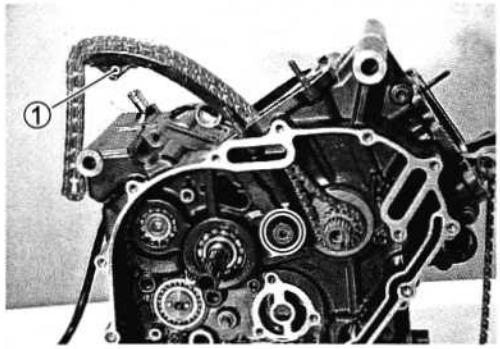

① Cam chain tensioner
② Cam chain tensioner bolt
③ Washer

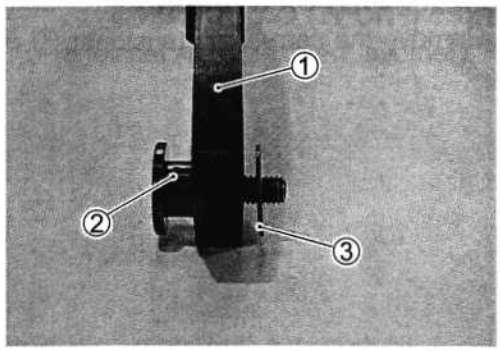

- Remove the No.2 (Rear) cam chain ④ and the cam chain drive sprocket ⑤.

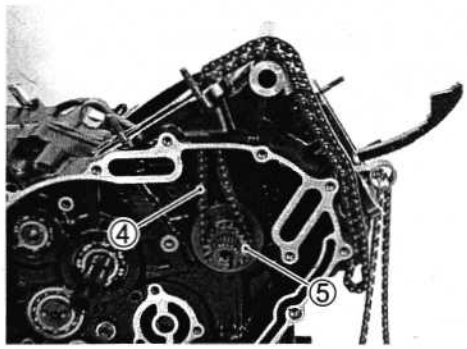

GENERATOR ROTOR

- Hold the generator rotor with the special tool.

TOOL 09930-44530: Rotor holder

- Remove the generator rotor bolt ① and the washer.

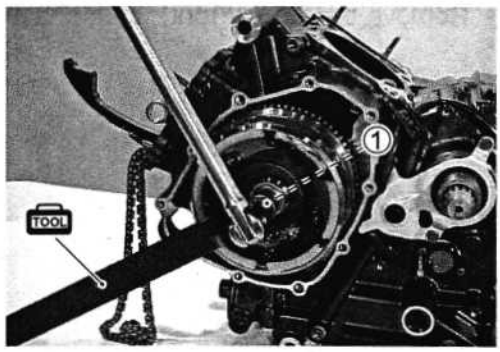

- Remove the generator rotor ② with the special tool.

TOOL 09930-30450: Rotor remover

NOTE:
Refer to the page 3-84 for the starter clutch removal.

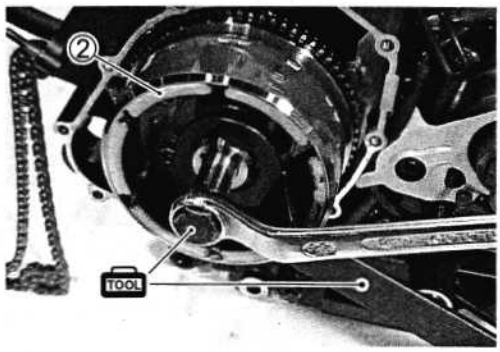

- Remove the key ①.
- Remove the starter driven gear ②.

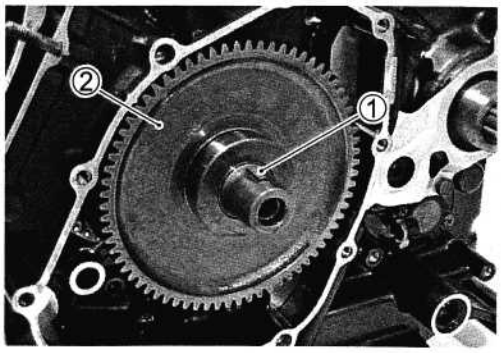

NO.1 (FRONT) CAM CHAIN

- Remove the cam chain tensioner ①.

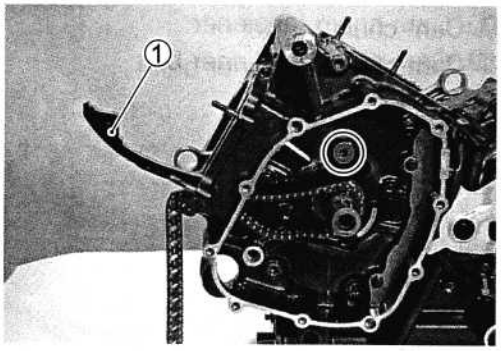

① Cam chain tensioner
② Cam chain tensioner bolt
③ Washer

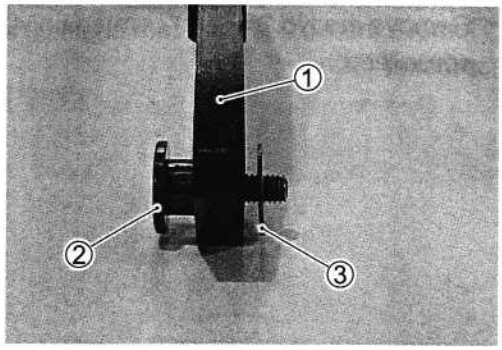

- Remove the No.1 (Front) cam chain ④.

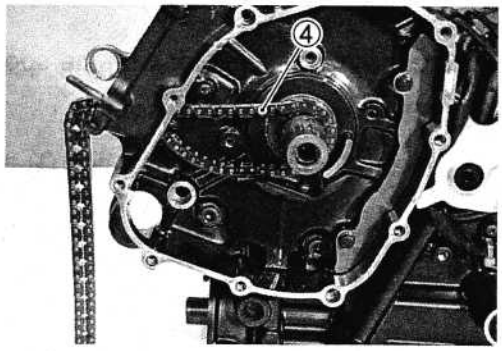

NEUTRAL INDICATOR LIGHT SWITCH

- Remove the driveshaft oil seal retainer ①.

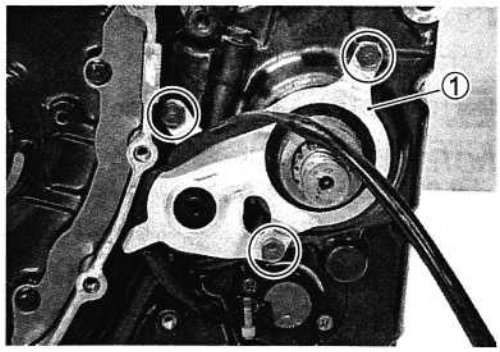

- Remove the neutral indicator light switch ②.

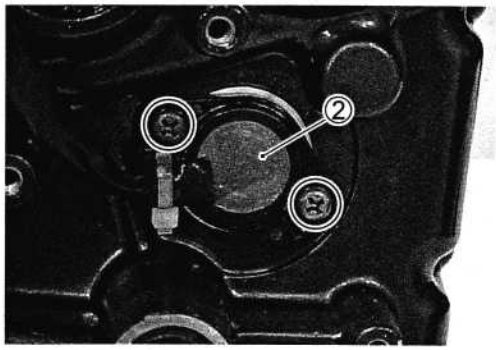

- Remove the O-ring ③.
- Remove the switch contacts ④ and the springs ⑤.

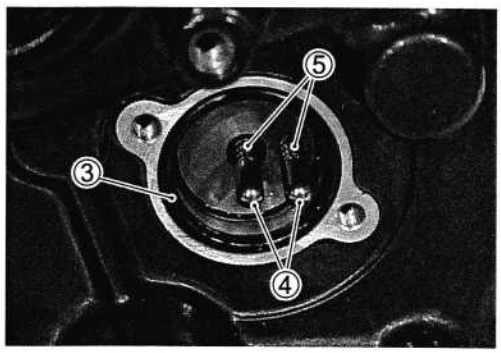

CRANKCASE

- Remove the crankcase bolts.

NOTE:
Loosen the crankcase bolt diagonally and the smaller sizes first.

- Remove the oil prate ⑥.

NOTE:
The oil plate ⑥ has been installed until the following engine.

Engine serial number: Until P503-102260
Until P505-100113

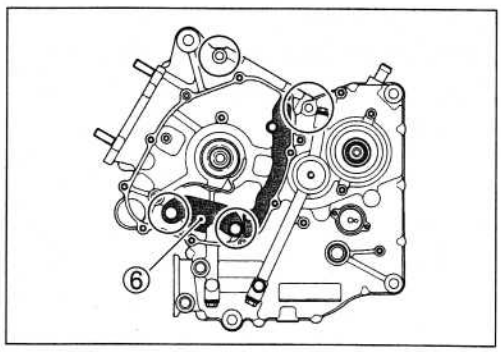

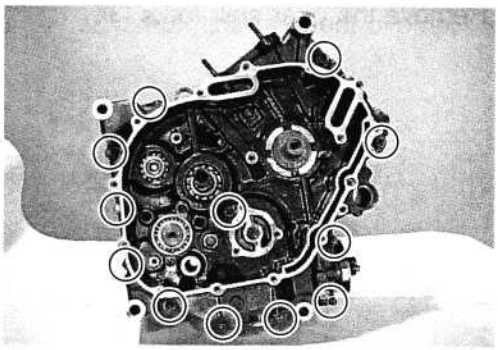

- Separate the crankcase into 2 parts, right and left with the crankcase separating tool.

TOOL 09920-13120: Crankcase separating tool

NOTE:

* *Fit the crankcase separating tool, so that the tool arms are in parallel with the side of crankcase.*
* *The crankshaft and transmission components should remain in the left crankcase half.*

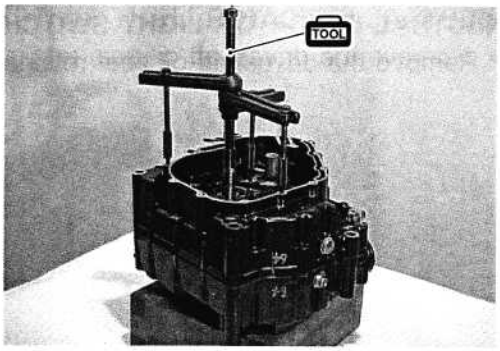

- Remove the O-rings ① and the dowel pins ②.

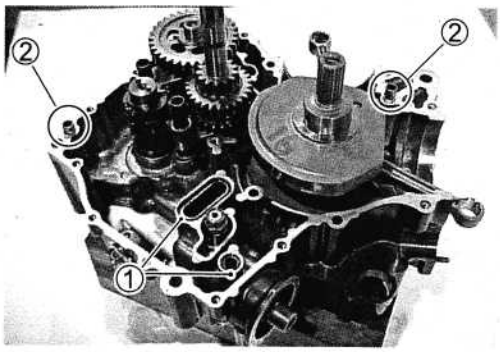

CRANKSHAFT

- Remove the crankshaft ① and the thrust washer ②.

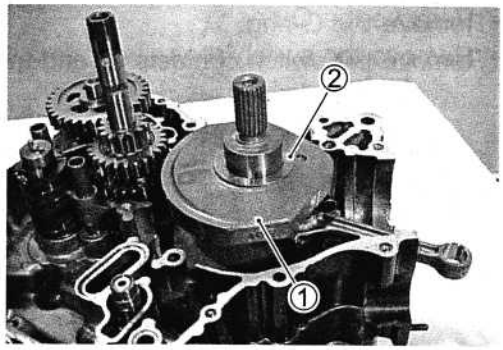

TRANSMISSION

- Remove the gearshift fork shafts ①.
- Remove the gearshift cam ②.

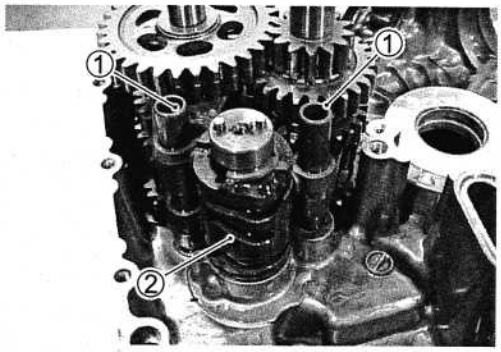

- Remove the gear shift forks ③.

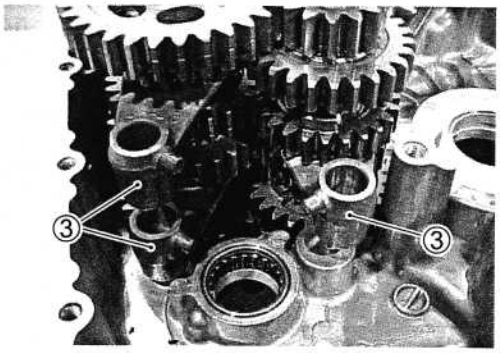

- Remove the driveshaft assembly ① and the countershaft assembly ②.

NOTE:
Refer to the page 3-78 for the driveshaft and the countershaft servicing.

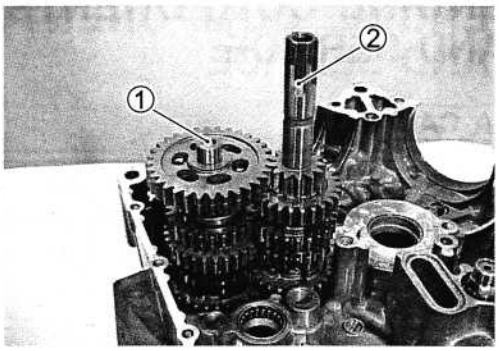

- Remove the engine sprocket spacer ③ and the O-ring ④.

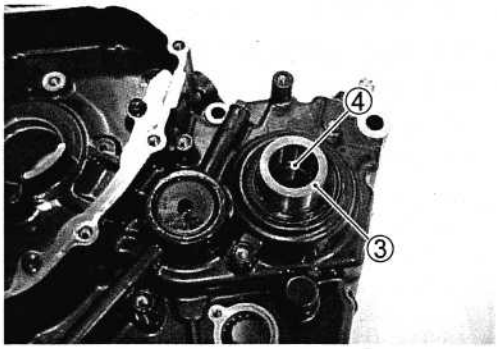

ENGINE COMPONENTS INSPECTION AND SERVICE

⚠ CAUTION

Identify the position of each removed part. Organize the parts in their respective groups (i.e., intake, exhaust, No.1 or No.2) so that they can be installed in their original locations.

CAMSHAFT

CAMSHAFT IDENTIFICATION

- The camshafts can be identified by the embossed letters Ⓐ and the cords Ⓑ stamped on the camshaft ends.

	Letter Ⓐ	Cord Ⓑ
① No.1 (Front) intake camshaft	INF	A
② No.1 (Front) exhaust camshaft	EXF	B
③ No.2 (Rear) intake camshaft	INR	C
④ No.2 (Rear) exhaust camshaft	EXR	D

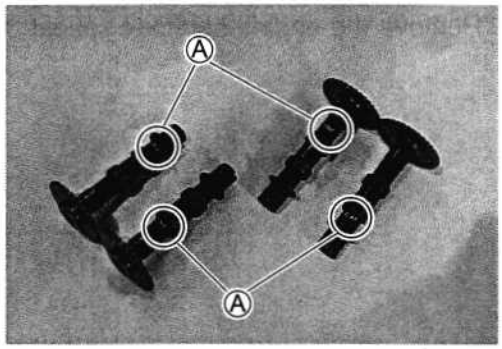

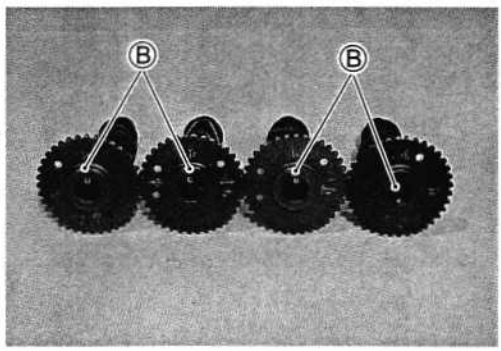

CAM WEAR

- Check the camshaft for wear or damage.
- Measure the cam height Ⓗ with a micrometer.

TOOL 09900-20202: Micrometer (25 – 50 mm)

DATA Cam height Ⓗ

Service Limit: (Intake): 35.18 mm (1.385 in)
(Exhaust): 33.18 mm (1.306 in)

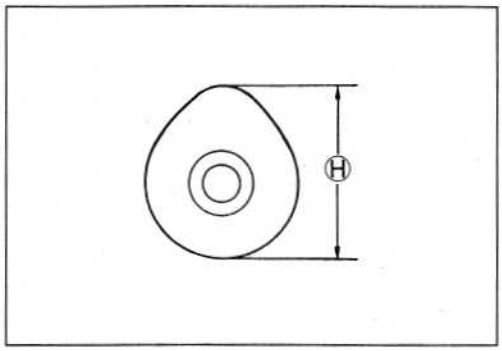

CAMSHAFT JOURNAL WEAR

- Determine whether or not each journal is worn down to the limit by measuring the oil clearance with the camshaft installed in place.
- Use the plastigauge to read the clearance at the widest portion, which is specified as follows:

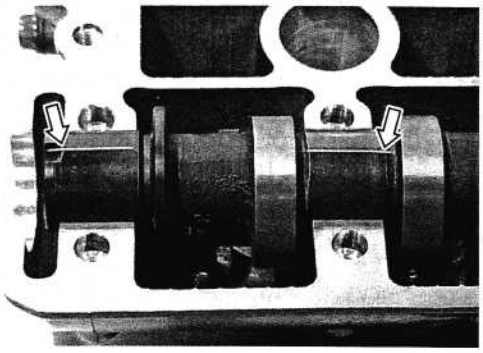

DATA Camshaft journal oil clearance
Service Limit: (IN & EX): 0.150 mm (0.0059 in)

TOOL 09900-22301: Plastigauge
09900-22302: Plastigauge

NOTE:
Install camshaft journal holder to their original positions.
(☞ 3-110, 3-114)

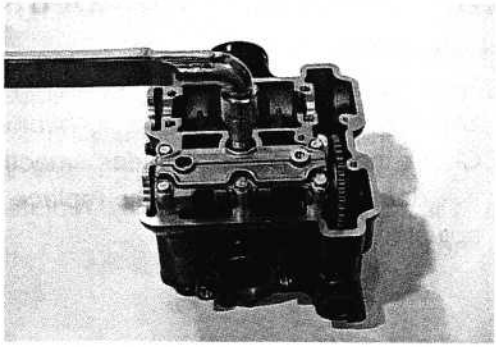

- Tighten the camshaft journal holder bolts evenly and diagonally to the specified torque.

Camshaft journal holder bolt: 10 N·m
(1.0 kgf·m, 7.0 lb-ft)

NOTE:
Do not rotate the camshaft with the plastigauge in place.

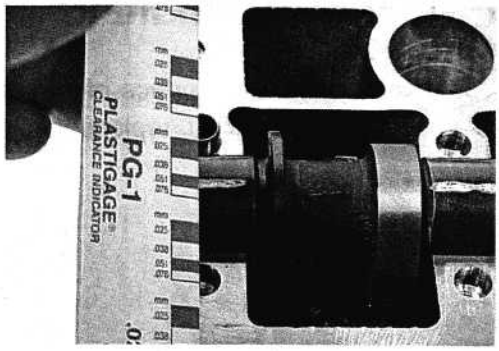

- Remove the camshaft holders, and read the width of the compressed plastigauge with envelope scale.
- This measurement should be taken at the widest part.

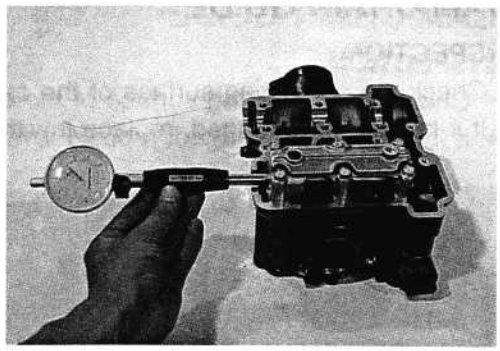

- If the camshaft journal oil clearance measured exceeds the limit, measure the inside diameter of the camshaft journal holder and outside diameter of the camshaft journal.
- Replace the camshaft or the cylinder head depending upon which one exceeds the specification.

DATA Journal holder I.D.
Standard (IN & EX): 22.012 – 22.025 mm
(0.8666 – 0.8671 in)

TOOL 09900-20602: Dial gauge (1/1000, 1 mm)
09900-22403: Small bore gauge (18 – 35 mm)

DATA Camshaft journal O.D.
Standard (IN & EX): 21.959 – 21.980 mm
(0.8645 – 0.8654 in)

TOOL 09900-20205: Micrometer (0 – 25 mm)

CAMSHAFT RUNOUT

- Measure the runout using the dial gauge.
- Replace the camshaft if the runout exceeds the limit.

TOOL 09900-20606: Dial gauge (1/100 mm)
09900-20701: Magnetic stand
09900-21304: V-block set (100 mm)

DATA Camshaft runout
Service Limit (IN & EX): 0.1 mm (0.004 in)

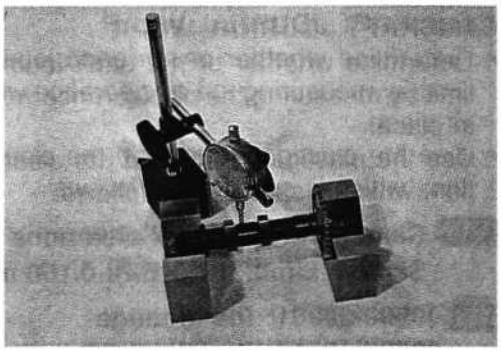

CAM CHAIN TENSION ADJUSTER

INSPECTION

- Remove the cam chain tension adjuster bolt.
- Shorten the push rod with a screwdriver.
- Check that the push rod slides smoothly when releasing it.
- If it does not slide smoothly, replace the cam chain tension adjuster with a new one.

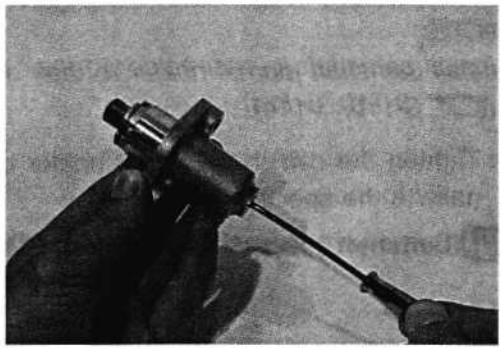

CAM CHAIN TENSIONER

INSPECTION

- Check the contacting surface of the cam chain tensioner.
- If it is worn or damaged, replace it with a new one.

CAM CHAIN GUIDE

INSPECTION

- Check the contacting surface of the cam chain guide.
- If it is worn or damaged, replace it with a new one.

CYLINDER HEAD AND VALVE

VALVE AND VALVE SPRING DISASSEMBLY

- Remove the tappets ① and shims ② by fingers or magnetic hand.

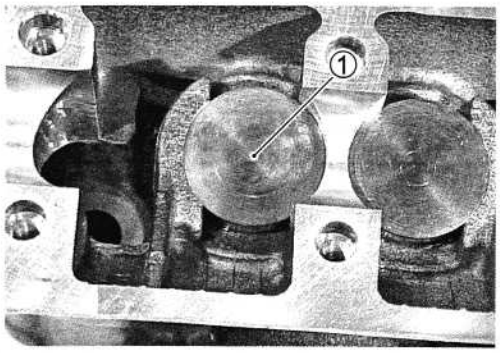

▲ CAUTION

Identify the position of each removed parts.

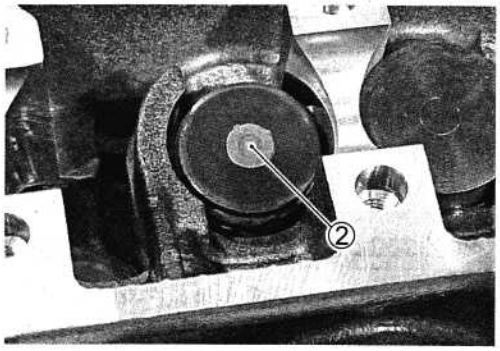

- Using special tools, compress the valve springs and remove the two cotter halves ③ from valve stem.

TOOL 09916-14510: Valve lifter
09916-14521: Valve lifter attachment
09916-84511: Tweezers

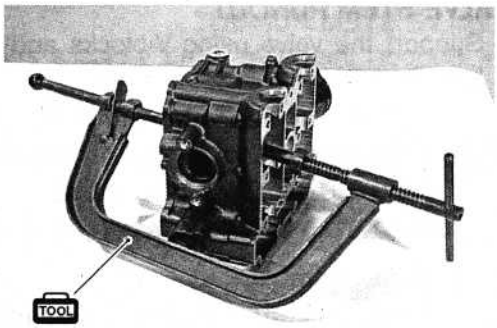

- Remove the valve spring retainer ④ and valve springs ⑤.

▲ CAUTION

Be careful not to damage the tappet sliding surface with the special tool.

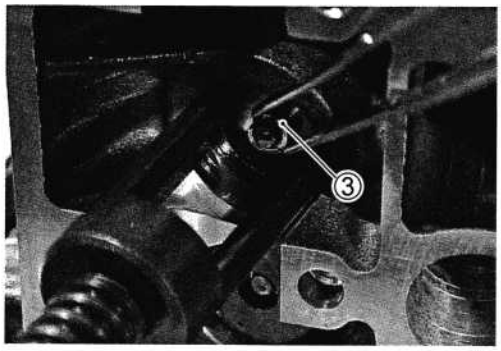

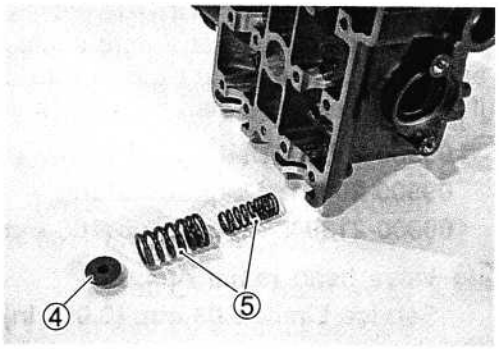

- Pull out the valve from the other side.

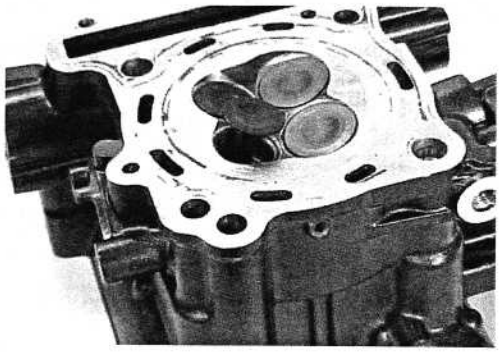

- Remove the oil seals ① and the spring seats ②.

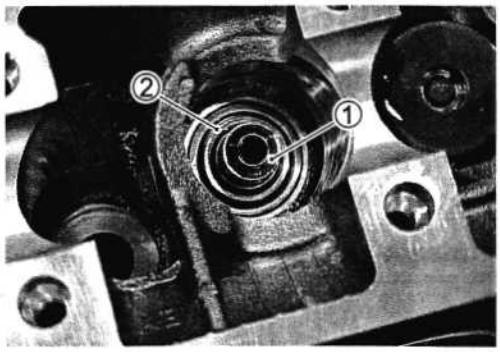

▲ CAUTION

Do not reuse the removed oil seals.

CYLINDER HEAD DISTORTION

- Decarbonize the combustion chambers.
- Check the gasketed surface of the cylinder head for distortion with a straightedge and thickness gauge, taking a clearance reading at several places indicated.
- If the largest reading at any position of the straightedge exceeds the limit, replace the cylinder head.

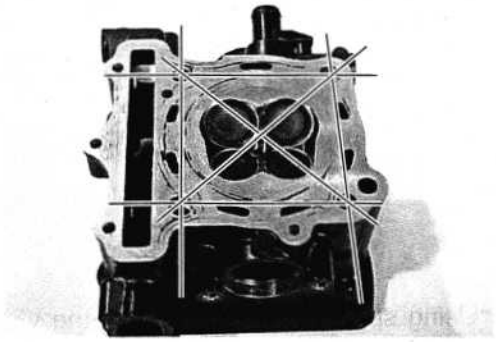

TOOL 09900-20803: Thickness gauge

DATA Cylinder head distortion
Standard: 0.05 mm (0.002 in)

VALVE STEM RUNOUT

- Support the valve using V-blocks and check its runout using the dial gauge as shown.
- If the runout exceeds the service limit, replace the valve.

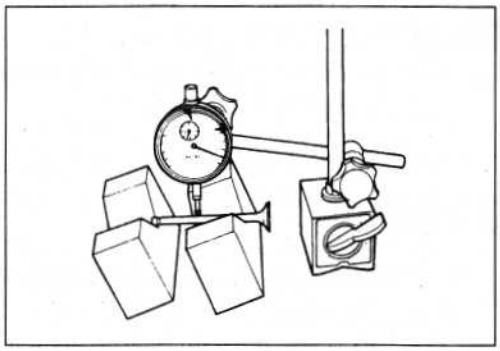

TOOL 09900-20606: Dial gauge (1/100 mm)
09900-20701: Magnetic stand
09900-21304: V-block set (100 mm)

DATA Valve stem runout
Service Limit: 0.05 mm (0.002 in)

VALVE HEAD RADIAL RUNOUT

- Place the dial gauge at a right angle to the valve head face and measure the valve head radial runout.
- If it measures more than the service limit, replace the valve.

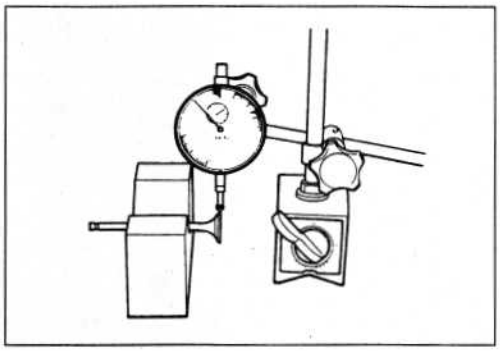

TOOL 09900-20606: Dial gauge (1/100 mm)
09900-20701: Magnetic stand
09900-21304: V-block set (100 mm)

DATA Valve head radial runout
Service Limit: 0.03 mm (0.001 in)

VALVE FACE WEAR

- Visually inspect each valve face for wear. Replace any valve with an abnormally worn face. The thickness of the valve face decreases as the face wears. Measure the valve face Ⓣ. If it is out of specification, replace the valve with a new one.

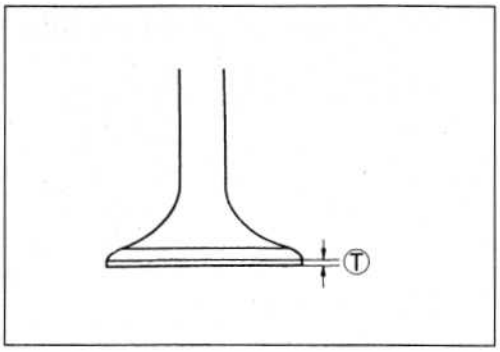

TOOL 09900-20102: Vernier calipers

DATA Valve head thickness Ⓣ
Service Limit: 0.5 mm (0.02 in)

VALVE STEM DEFLECTION

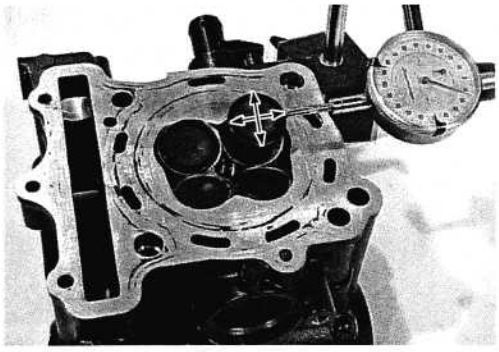

- Lift the valve about 10 mm (0.39 in) from the valve seat.
- Measure the valve stem deflection in two directions, "X" and "Y", perpendicular to each other, by positioning the dial gauge as shown.
- If the deflection measured exceeds the limit, then determine whether the valve or the guide should be replaced with a new one.

TOOL 09900-20606: Dial gauge (1/100 mm)
09900-20701: Magnetic stand

DATA Valve stem deflection (IN & EX)
Service Limit: 0.35 mm (0.014 in)

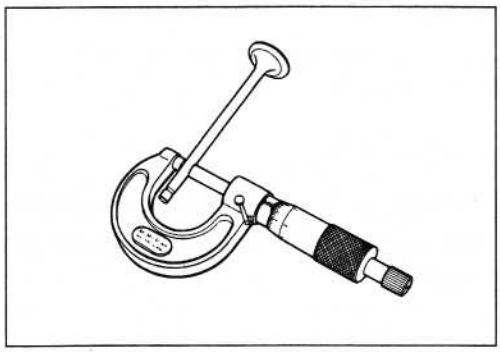

VALVE STEM WEAR

- If the valve stem is worn down to the limit, as measured with a micrometer, where the clearance is found to be in excess of the limit indicated, replace the valve.
- If the stem is within the limit, then replace the guide.
- After replacing valve or guide, be sure to recheck the clearance.

TOOL 09900-20205: Micrometer (0 – 25 mm)

DATA Valve stem O.D.
Standard(IN): 4.465 – 4.480 mm (0.1758 – 0.1764 in)
(EX): 4.455 – 4.470 mm (0.1754 – 0.1760 in)

NOTE:
If valve guides have to be removed for replacement after inspecting related parts, carry out the steps shown in valve guide servicing.

VALVE GUIDE SERVICING

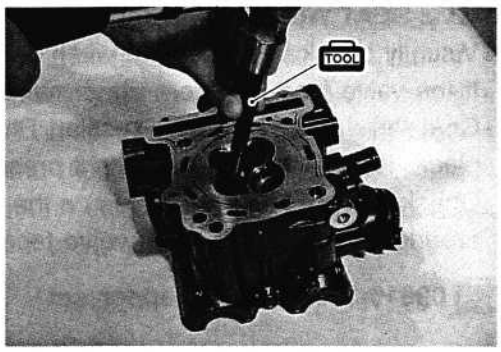

- Using the valve guide remover, drive the valve guide out toward the intake or exhaust camshaft side.

TOOL 09916-43210: Valve guide remover/installer

NOTE:
* *Discard the removed valve guide subassemblies.*
* *Only oversized valve guides are available as replacement parts. (Part No. 11115-18D72)*

- Re-finish the valve guide holes in cylinder head with the reamer and handle.

TOOL 09916-34580: Valve guide reamer
09916-34542: Reamer handle

⚠ CAUTION

When refinishing or removing the reamer from the valve guide hole, always turn it clockwise.

- Apply engine oil to the valve guide hole.

- Drive the valve guide into the hole using the valve guide installer ① and attachment ②.

TOOL 09916-43210: Valve guide installer/remover ①
09916-53330: Attachment ②

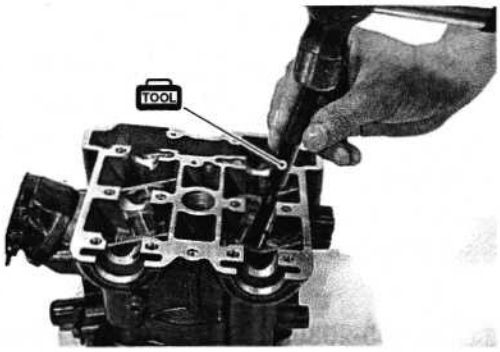

NOTE:
Install the valve guide until the attachment contacts with the cylinder head ③.

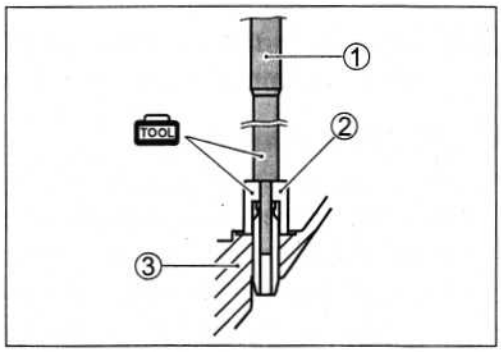

⚠ CAUTION

Failure to oil the valve guide hole before driving the new guide into place may result in a damaged guide or head.

- After installing the valve guides, re-finish their guiding bores using the reamer.
- Clean and oil the guides after reaming.

TOOL 09916-34570: Valve guide reamer
09916-34542: Valve guide reamer handle

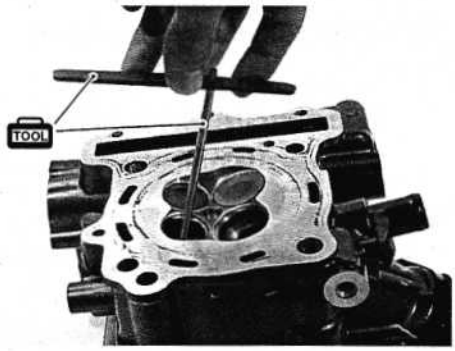

NOTE:
Insert the reamer from the combustion chamber and always turn the reamer handle clockwise.

VALVE SEAT WIDTH INSPECTION

- Visually check for valve seat width on each valve face.
- If the valve face has worn abnormally, replace the valve.
- Coat the valve seat with Prussian Blue and set the valve in place. Rotate the valve with light pressure.
- Check that the transferred blue on the valve face is uniform all around and in center of the valve face.

TOOL 09916-10911: Valve lapper set

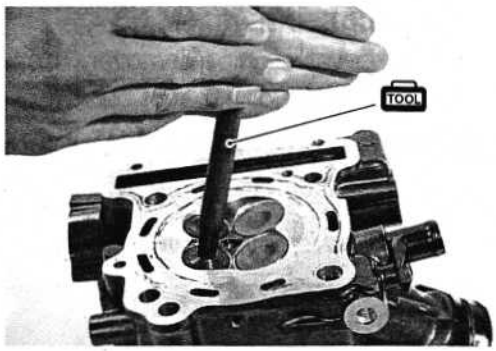

- If the seat width Ⓦ measured exceeds the standard value, or seat width is not uniform reface the seat using the seat cutter.

DATA Valve seat width Ⓦ
Standard: 0.9 – 1.1 mm (0.035 – 0.043 in)

If the valve seat is out of specification, re-cut the seat.

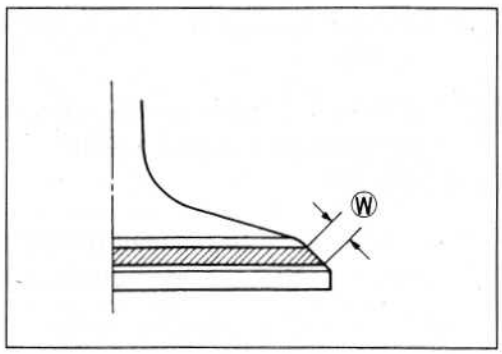

VALVE SEAT SERVICING

- The valve seats for both the intake and exhaust valves are machined to four different angles. The seat contact surface is cut at 45°.

	INTAKE	EXHAUST
15°		N-121
30°	N-126	
45°	N-122	N-122
60°	N-111	N-111

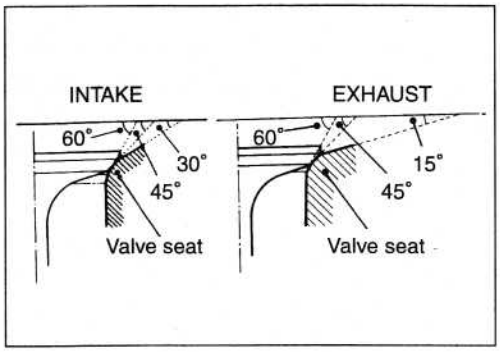

TOOL 09916-21111: Valve seat cutter set
09916-20630: Valve seat cutter (N-126)
09916-20640: Solid pilot (N-100-4.5)

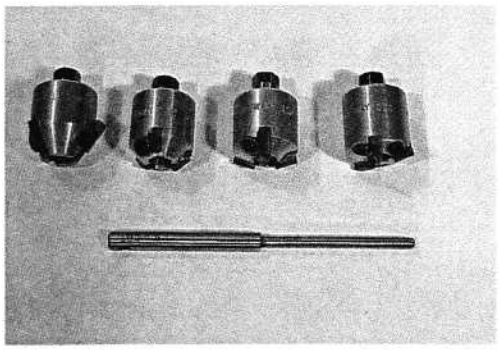

NOTE:

* *The valve seat cutters (N-121), (N-122) and (N-111) are included in the valve seat cutter set (09916-21111).*

* *Use the solid pilot (N-100-4.5) along with the valve seat cutter.*

▲ CAUTION

The valve seal contact area must be inspected after each cut.

- When installing the solid pilot ①, rotate it slightly. Seat the pilot snugly. Install the 45° cutter, attachment and T-handle.

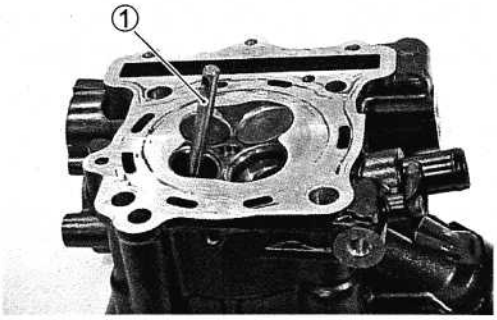

INITIAL SEAT CUT

- Using the 45° cutter, descale and clean up the seat. Rotate the cutter one or two turns.
- Measure the valve seat width Ⓦ after every cut.

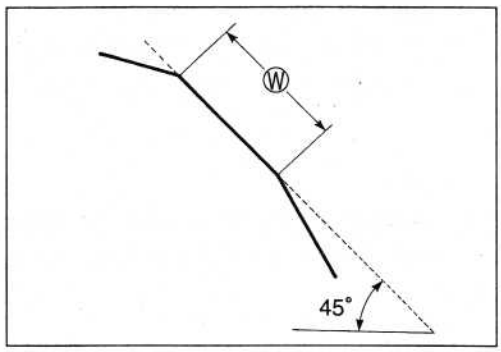

- If the valve seat is pitted or burned, use the 45° cutter to condition the seat some more.

NOTE:

Cut only the minimum amount necessary from the seat to prevent the possibility of the valve stem becoming too close to the rocker arm for correct valve contact angle.

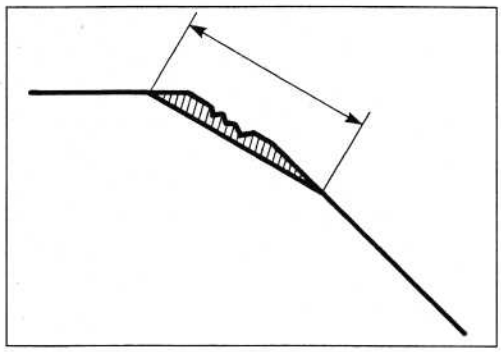

TOP NARROWING CUT

- If the contact area Ⓦ is too high on the valve, or if it is too wide, use the 15° (for the exhaust side) and the 30° (for the intake side) to lower and narrow the contact area.

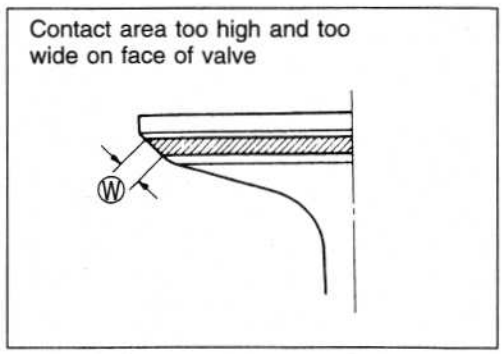

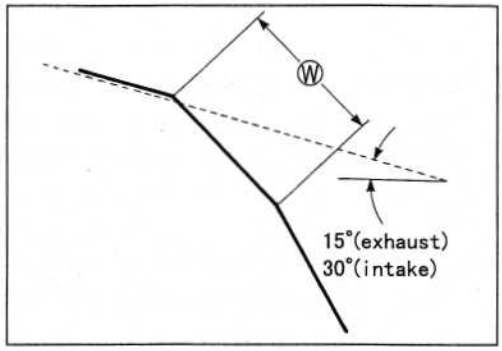

BOTTOM NARROWING CUT

- If the contact area Ⓦ is too wide or too low, use the 60° cutter to narrow and raise the contact area.

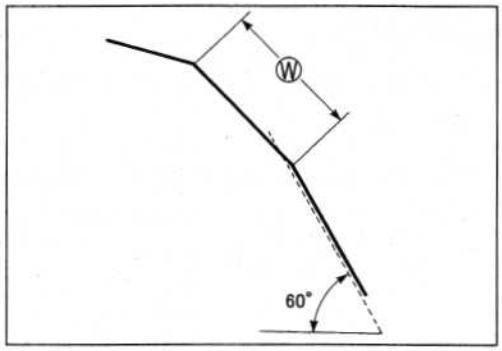

FINAL SEAT CUT

- If the contact area Ⓦ is too low or too narrow, use the 45° cutter to raise and widen the contact area.

NOTE:
After cutting the 15°, 30° and 60° angles, it is possible that the valve seat (45°) is too narrow. If so, re-cut the valve seat to the correct width.

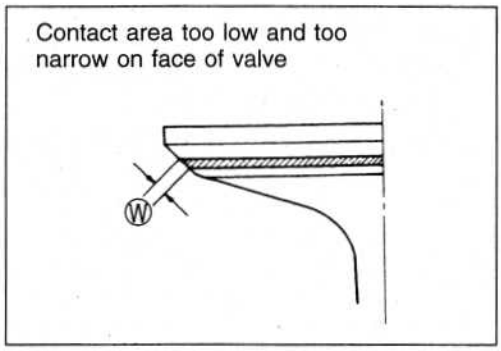

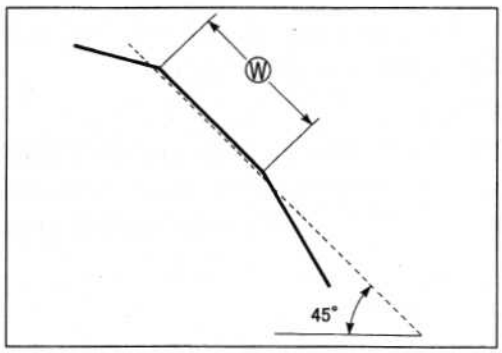

- After the desired seat position and width is achieved, use the 45° cutter very lightly to clean up any burrs caused by the previous cutting operations.

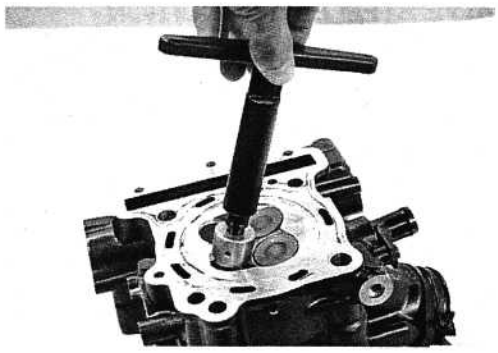

⚠ CAUTION

Do not use lapping compound after the final cut is made. The finished valve seat should have a velvety smooth finish but not a highly polished or shiny finish. This will provide a soft surface for the final seating of the valve which will occur during the first few seconds of engine operation.

NOTE:
After servicing the valve seats, be sure to check the tappet clearance after the cylinder head has been reinstalled. (☞ 2-8)

- Clean and assemble the head and valve components. Fill the intake and exhaust ports with gasoline to check for leaks.
- If any leaks occur, inspect the valve seat and face for burrs or other things that could prevent the valve from sealing.

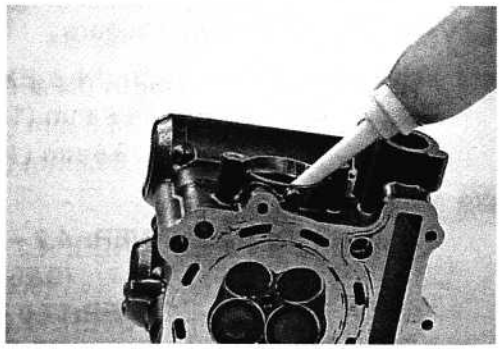

⚠ WARNING

Always use extreme caution when handling gasoline.

VALVE STEM END CONDITION

- Check the valve stem end face for pitting and wear.

VALVE SPRING

The force of the coil springs keeps the valve seat tight. Weakened springs result in reduced engine power output, and often account for the chattering noise coming from the valve mechanism.

Check the valve springs for proper strength by measuring their free length and also by the force required to compress them. If the spring length is less than the service limit, or if the force required to compress the spring does not fall within the range specified, replace both the inner and outer springs as a set.

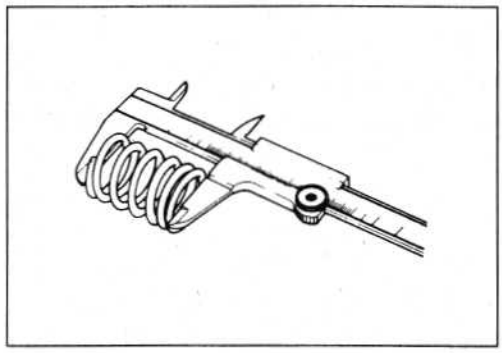

TOOL 09900-20102: Vernier calipers

DATA Valve spring free length (IN & EX)
Service limit: INNER: 36.8 mm (1.45 in)
OUTER: 39.8mm (1.57 in)

DATA Valve spring tension
Standard: (IN & EX) INNER: 4.2 – 4.8 kgf/ 29.9 mm
(9.26 – 10.58 lbs/1.18 in)
OUTER: 17.0 – 19.6 kgf/33.4 mm
(37.48 – 43.21 lbs/1.31 in)

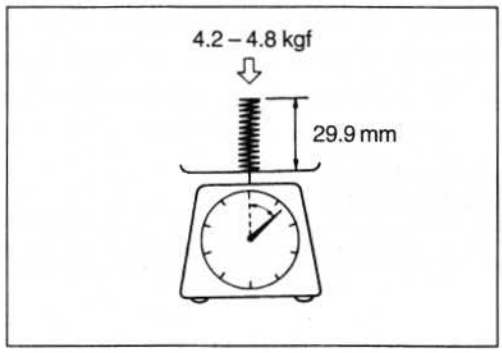

VALVE AND VALVE SPRING REASSEMBLY

- Install the valve spring seats ①.
- Apply oil and Moly paste to each oil seal ②, and press-fit them into position with the valve guide installer.

TOOL 09916-43210: Valve guide remover/installer

M 99000-25140: SUZUKI MOLY PASTE

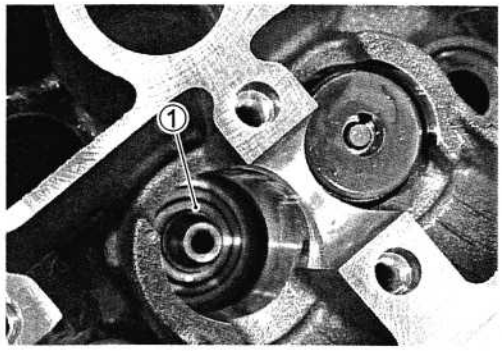

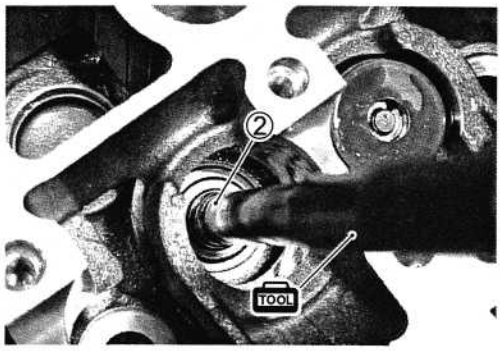

⚠ CAUTION

Do not reuse the removed oil seals.

- Insert the valves, with their stems coated with high quality molybdenum disulfide lubricant (SUZUKI MOLY PASTE) all around and along the full stem length without any break.

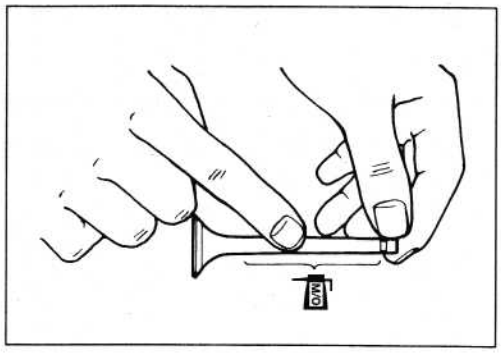

⚠ CAUTION

When inserting each valve, take care not to damage the lip of the oil seal.

M 99000-25140: SUZUKI MOLY PASTE

- Install the valve springs with the small-pitch portion Ⓐ facing cylinder head.

Ⓑ: Large-pitch portion

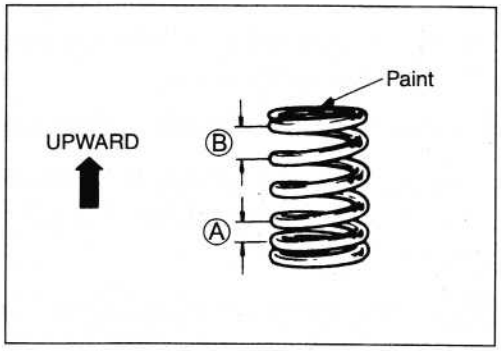

- Put on the valve spring retainer ①, and using the valve lifter, press down the springs, fit the cotter halves to the stem end, and release the lifter to allow the cotter ② to wedge in between retainer and stem. Be sure that the rounded lip Ⓐ of the cotter fits snugly into the groove Ⓑ in the stem end.

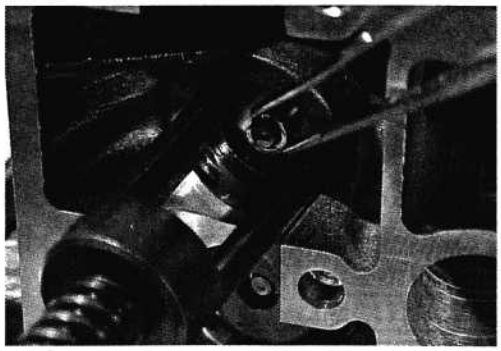

TOOL 09916-14510: Valve lifter
09916-14521: Valve lifter attachment
09916-84511: Tweezers

⚠ CAUTION

Be sure to restore each spring and valve to their original positions.

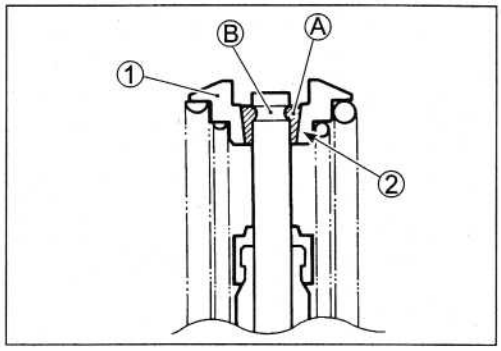

- Install the tappet shim and the tappet to their original position.

NOTE:
** Apply engine oil to the shim and tappet before fitting them.*
** When seating the tappet shim, be sure the figure printed surface faces the tappet.*

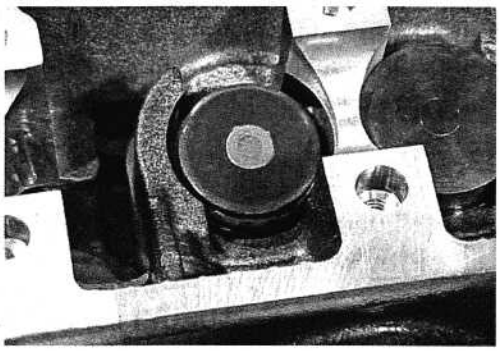

INTAKE PIPE

- Install the intake pipe as following procedure.
- Apply grease to the O-ring.

99000-25030: SUZUKI SUPER GREASE "A"

- Make sure that the "UP" mark Ⓐ comes upward.
- Apply a small quantity of THREAD LOCK "1342" to the screws and tighten it.

99000-32050: THREAD LOCK "1342"

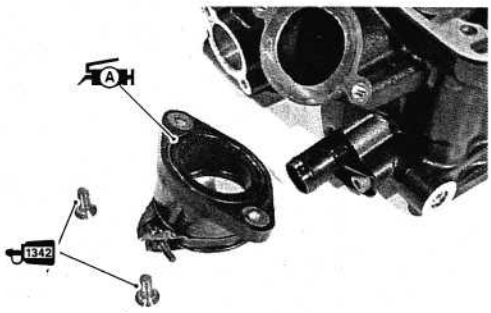

⚠ CAUTION

Use the new O-ring to prevent air from sucking through the joint.

NOTE:
The intake pipe can be identified by the mark Ⓑ.
F: No.1 (Front) intake pipe
R: No.2 (Rear) intake pipe

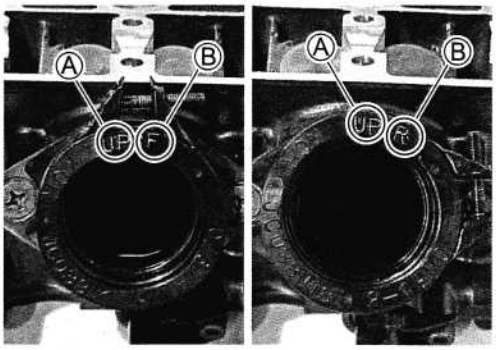

EXHAUST PIPE

- When installing the rear exhaust pipe, tighten its bolts to the specified torque.

Exhaust pipe bolt: 23 N·m (2.3 kgf·m, 16.5 lb-ft)

▲ CAUTION

Use the new gasket to prevent exhaust gas leakage.

WATER UNION

- Install the O-ring to the water union.

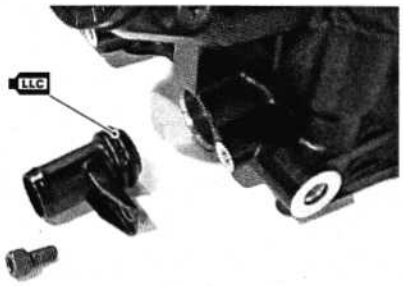

▲ CAUTION

Replace the O-ring with a new one.

- When installing the water union, apply engine coolant to the O-ring.

CYLINDER

CYLINDER DISTORTION

- Check the gasketed surface of the cylinder for distortion with a straightedge and thickness gauge, taking a clearance reading at several places as indicated.
- If the largest reading at any position of the straightedge exceeds the limit, replace the cylinder.

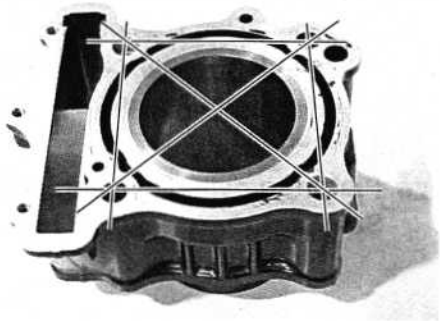

TOOL 09900-20803: Thickness gauge

DATA Cylinder distortion
Service Limit: 0.05 mm (0.002 in)

CYLINDER BORE

- Inspect the cylinder wall for any scratches, nicks or other damage.
- Measure the cylinder bore diameter at six places.

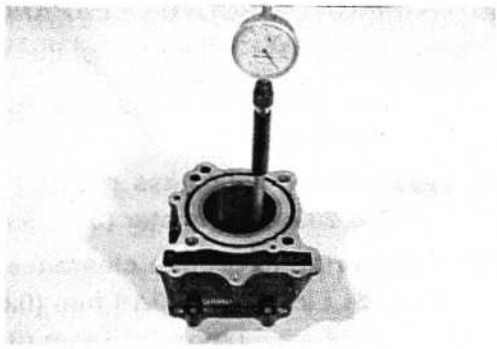

DATA Cylinder bore
Standard: 81.000 – 81.015 mm (3.1890 – 3.1896 in)

TOOL 09900-20508: Cylinder gauge set

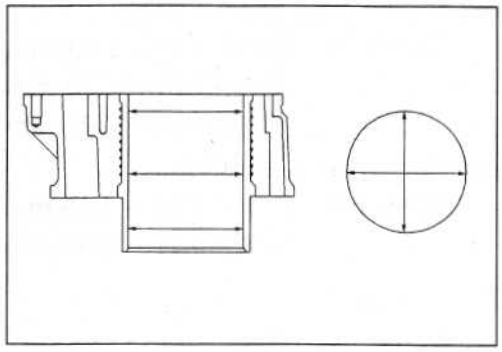

PISTON AND PISTON RING

PISTON DIAMETER

- Using a micrometer, measure the piston outside diameter at 20 mm (0.79 in) Ⓐ from the piston skirt end.
- If the measurement is less than the limit, replace the piston.

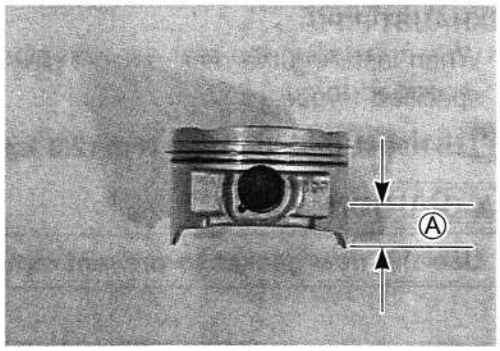

DATA Piston diameter
Service Limit: 80.88 mm (3.184 in)
at 20 mm (0.79 in) from the skirt end

TOOL 09900-20204: Micrometer (75 – 100 mm)

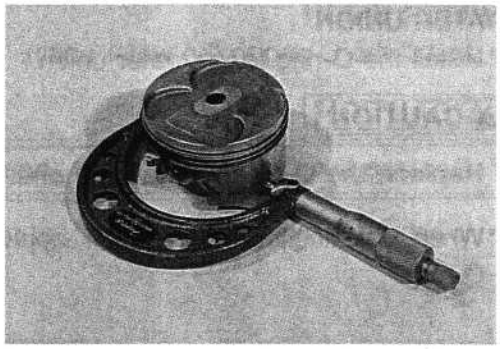

PISTON-TO CYLINDER CLEARANCE

- Subtract the piston diameter from the cylinder bore diameter.
- If the piston-to-cylinder clearance exceeds the service limit, rebore the cylinder and use an oversize piston or replace both the cylinder and the piston.

DATA Piston-to-cylinder clearance
Standard: 0.055 – 0.065 mm (0.0022 – 0.0026 in)

PISTON-RING-TO-GROOVE CLEARANCE

- Measure the side clearances of the 1st and 2nd piston rings using the thickness gauge.
- If any of the clearances exceed the limit, replace both the piston and piston rings.

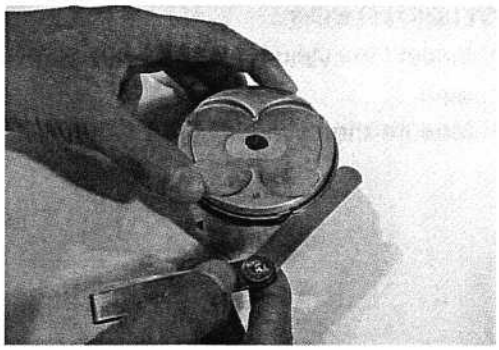

TOOL 09900-20803: Thickness gauge
09900-20205: Micrometer (0 – 25 mm)

DATA Piston-ring-to-groove clearance
Service Limit (1st): 0.18 mm (0.0071 in)
(2nd): 0.15 mm (0.0059 in)

DATA Piston ring groove width
Standard (1st): 1.21 – 1.23 mm (0.0476 – 0.0484 in)
(2nd): 1.01 – 1.03 mm (0.0398 – 0.0406 in)
(Oil): 2.01 – 2.03 mm (0.0791 – 0.0799 in)

DATA Piston ring thickness
Standard (1st): 1.17 – 1.19 mm (0.0461 – 0.0469 in)
(2nd): 0.97 – 0.99 mm (0.0382 – 0.0390 in)

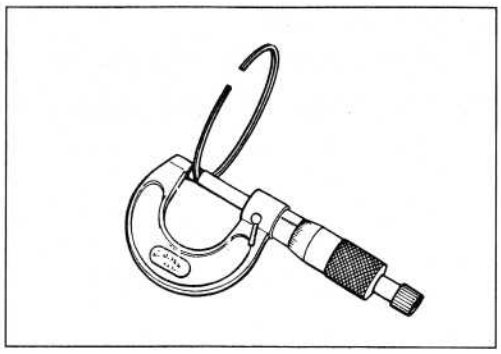

PISTON RING FREE END GAP AND PISTON RING END GAP

- Measure the piston ring free end gap using vernier calipers.
- Next, fit the piston ring squarely into the cylinder and measure the piston ring end gap using the thickness gauge.
- If any of the measurements exceed the service limit, replace the piston ring with a new one.

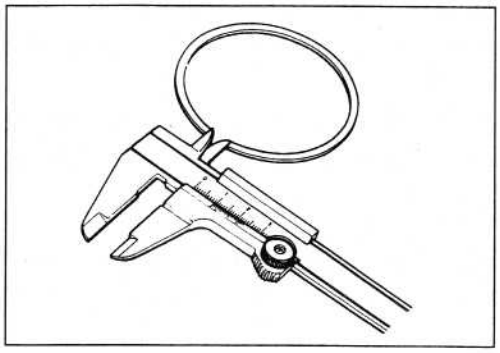

TOOL 09900-20102: Vernier calipers

DATA Piston ring free end gap
Service Limit (1st): 7.9 mm (0.31 in)
(2nd): 8.4 mm (0.33 in)

TOOL 09900-20803: Thickness gauge

DATA Piston ring end gap
Service Limit (1st): 0.70 mm (0.028 in)
(2nd): 0.70 mm (0.028 in)

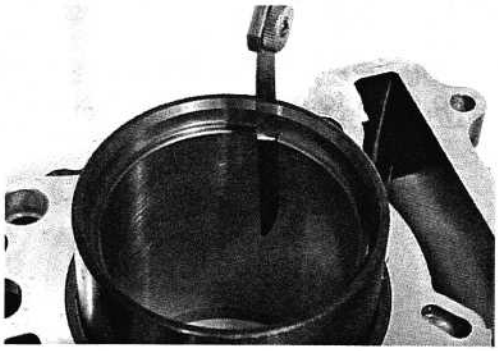

OVERSIZE PISTON RING

- The following two types of oversize piston rings are used.
- They bear the following identification numbers.

SIZE	1st	2nd
STD	NIL	NIL
0.5 mm O.S.	N50	N50
1.0 mm O.S.	N100	N100

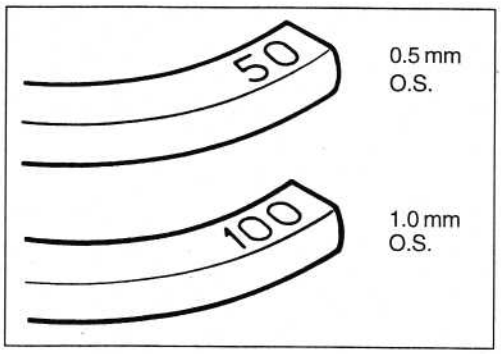

OVERSIZE OIL RING

- The following two types of oversize oil rings are available as optional parts.
- They bear the following identification marks.

SIZE	COLOR
STD	NIL
0.5 mm O.S.	BLUE
1.0 mm O.S.	YELLOW

- Measure the outside diameter to identify the size.

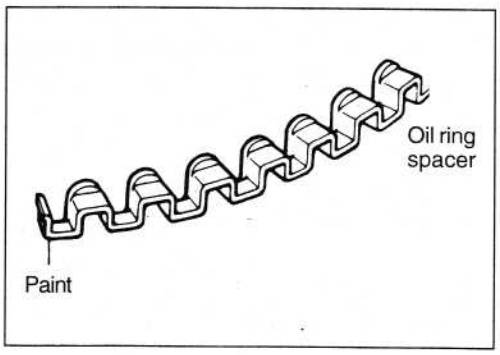

PISTON RING REASSEMBLY

- Install the piston rings in the order of oil ring, 2nd ring and 1st ring.
- The first member to go into the oil ring groove is a spacer ①. After placing the spacer, fit the two side rails ②.

NOTE:
Side designations, top and bottom, are not applied to the spacer and side rails: you can position each either way.

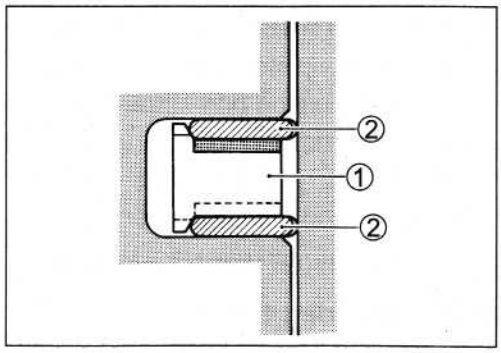

⚠ CAUTION

When installing the spacer, be careful not to allow its two ends to overlap in the groove.

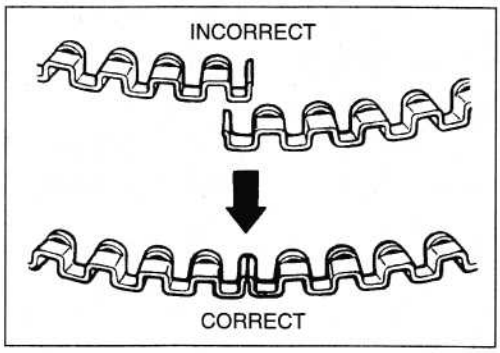

- Install the 2nd ring ③ and the 1st ring ④.

NOTE;
1st ring and 2nd ring differ in shape.

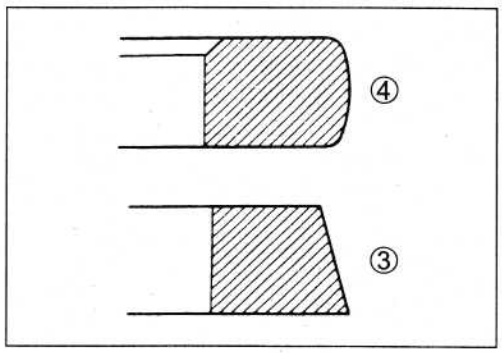

- 1st ring and 2nd ring have letters "R" and "RN" marked on the side. Be sure to bring the marked side to the top when fitting them to the piston.

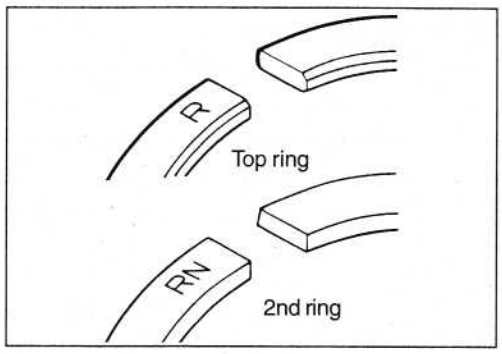

- Position the gaps of the three rings as shown. Before inserting each piston into the cylinder, check that the gaps are so located.

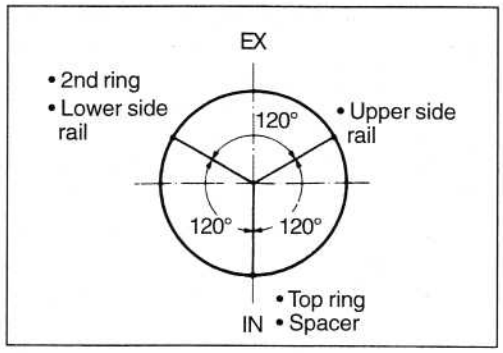

PISTON PINS AND PIN BORE

- Measure the piston pin bore inside diameter using the small bore gauge.
- If the measurement is out of specifications replace the piston.

TOOL 09900-20602: Dial gauge (1/1000 mm)
09900-22403: Small bore gauge (18 – 35 mm)

DATA Piston pin bore I.D.
Service Limit: 20.030 mm (0.7886 in)

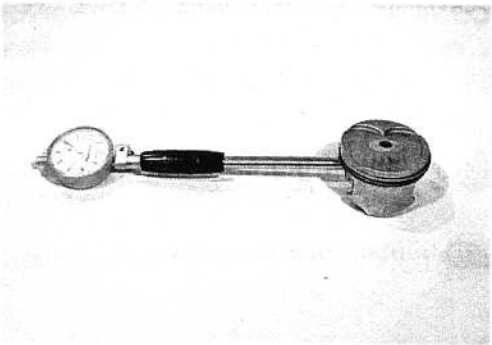

- Measure the piston pin outside diameter at three positions using the micrometer.
- If any of the measurements are out of specification, replace the piston pin.

TOOL 09900-20205: Micrometer (0 – 25 mm)

DATA Piston pin O.D.
Service Limit: 19.980 mm (0.7866 in)

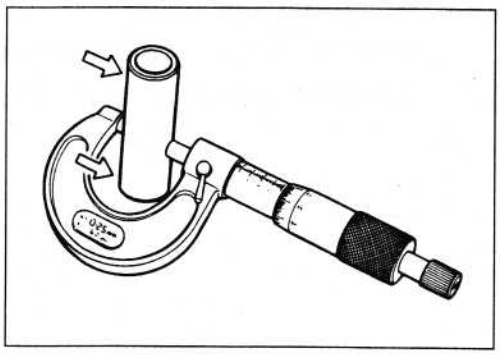

CONROD AND CRANKSHAFT

CONROD SMALL END I.D.

- Using a small bore gauge, measure the inside diameter of the conrod small end.

TOOL 09900-20602: Dial gauge (1/1000 mm, 1 mm)
09900-22403: Small bore gauge (18 – 35 mm)

DATA Conrod small end I.D.
Service Limit: 20.040 mm (0.7890 in)

- If the inside diameter of the conrod small end exceeds the limit, replace the conrod.

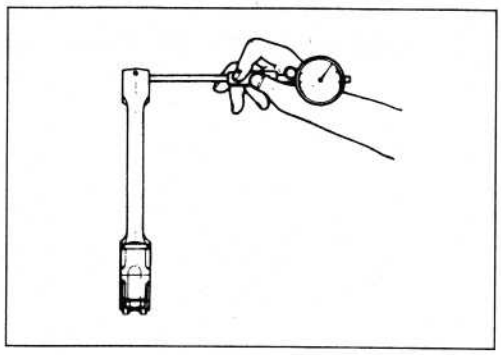

CONROD BIG END SIDE CLEARANCE

- Check the conrod side clearance by using a thickness gauge.
- If the clearance exceeds the limit, replace conrod or crankshaft.

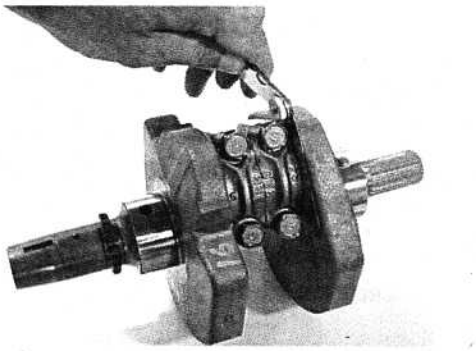

DATA Conrod big end side clearance
Service Limit: 0.50 mm (0.020 in)

TOOL 09900-20803: Thickness gauge

DATA Conrod big end width
Standard: 20.95 – 21.00 mm (0.825 – 0.827 in)

TOOL 09900-20205: Micrometer (0 – 25 mm)

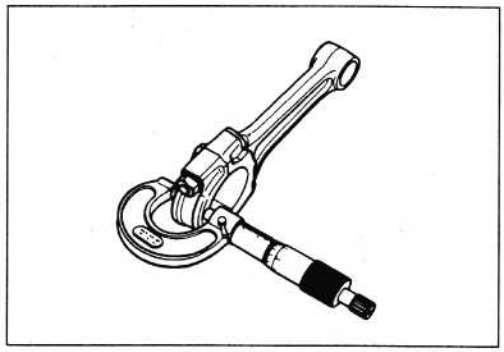

DATA Crank pin width
Standard: 42.17 – 42.22 mm (1.660 – 1.662 in)

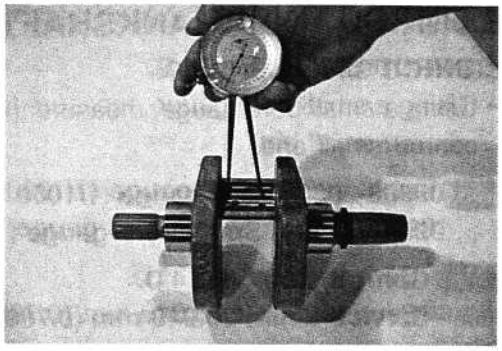

CONROD REMOVAL AND BEARING INSPECTION

- Loosen the bearing cap bolts, and tap the bearing cap bolt lightly with plastic hammer to remove the bearing cap.

- Remove the conrods, and mark them to identify the cylinder position.
- Inspect the bearing surfaces for any sign of fusion, pitting, burn, or flaws. If any, replace them with a specified set of bearings.

CONROD-CRANK PIN BEARING SELECTION

- Place the plastigauge axially along the crank pin, avoiding the oil hole, as shown.

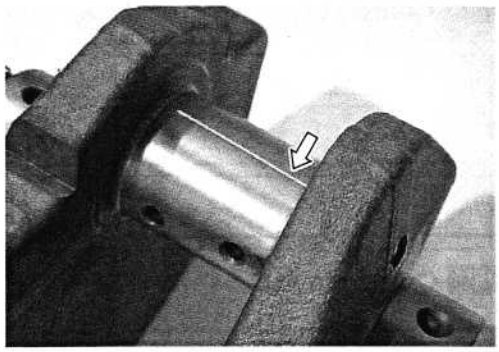

TOOL 09900-22301: Plastigauge

- Tighten the conrod cap bolts to the specified torque, in two stages. (☞ 3-61)

▲ CAUTION

> *** Apply engine oil to the conrod cap bolt.**
> *** Never rotate the crankshaft or conrod when a piece of plastigauge is installed.**

- Remove the bearing caps and measure the width of the compressed plastigauge using the envelope scale. This measurement should be taken at the widest part of the compressed plastigauge.

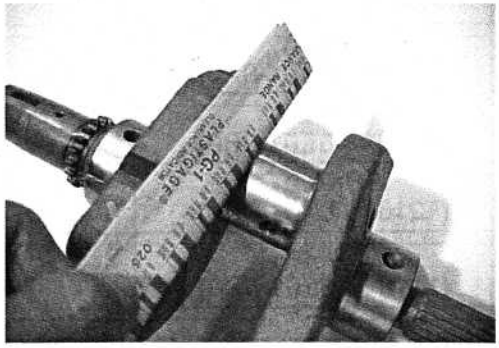

DATA Conrod big end oil clearance
Standard: 0.032 – 0.056 mm (0.0013 – 0.0022 in)
Service Limit: 0.080 mm (0.0031 in)

- If the oil clearance exceeds the service limit, select the specified bearings from the bearing selection table.
- Check the corresponding conrod I.D. code numbers ("1" or "2") Ⓐ.

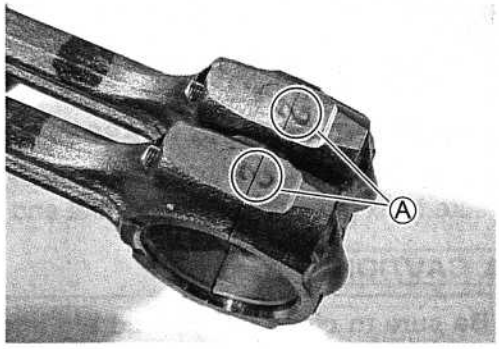

- Check the corresponding crank pin O.D. code numbers ("1" , "2" or "3") Ⓑ.

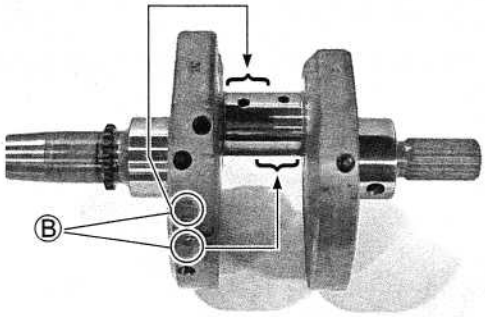

Bearing selection table

		Crank pin O.D. Ⓑ		
	Code	1	2	3
Conrod I.D. Ⓐ	1	Green	Black	Brown
	2	Black	Brown	Yellow

DATA Conrod I.D.

Code	I.D. specification
1	41.000 – 41.008 mm (1.6142 – 1.6145 in)
2	41.008 – 41.016 mm (1.6145 – 1.6148 in)

DATA Crank pin O.D.

Code	O.D. specification
1	37.992 – 38.000 mm (1.4957 – 1.4961 in)
2	37.984 – 37.992 mm (1.4954 – 1.4957 in)
3	37.976 – 37.984 mm (1.4951 – 1.4954 in)

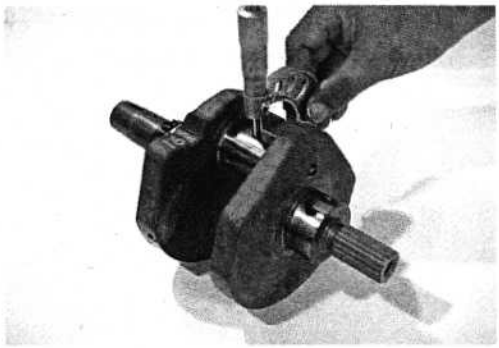

TOOL 09900-20202: Micrometer (25 – 50 mm)

DATA Bearing thickness

Color (Part No.)	Thickness
Green (12164-46E01-0A0)	1.480 – 1.484 mm (0.0583 – 0.0584 in)
Black (12164-46E01-0B0)	1.484 – 1.488 mm (0.0584 – 0.0586 in)
Brown (12164-46E01-0C0)	1.488 – 1.492 mm (0.0586 – 0.0587 in)
Yellow (12164-46E01-0D0)	1.492 – 1.496 mm (0.0587 – 0.0589 in)

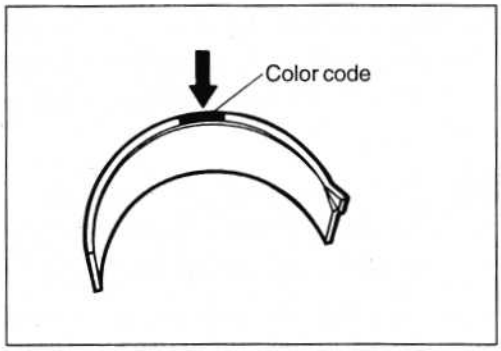

▲ CAUTION

The bearings must be replaced as a set.

CONROD AND BEARING REASSEMBLY

- When fitting the bearings to the bearing cap and conrod, be sure to fix the stopper part Ⓐ first and press in the other end.

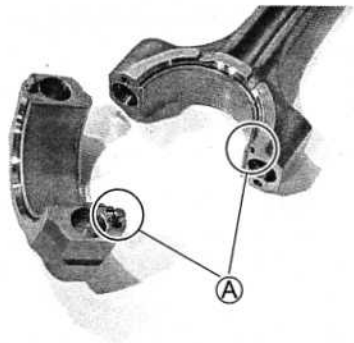

▲ CAUTION

Be sure to clean the conrod big end.

- Apply engine oil and SUZUKI MOLY PASTE to the crank pin and bearing surface.

99000-25140: SUZUKI MOLY PASTE

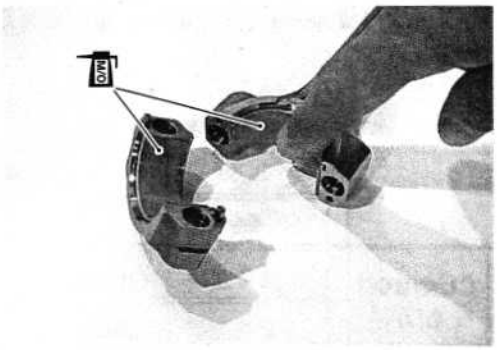

- When fitting the conrods on the crankshaft, make sure that I.D. codes Ⓐ of the conrods face each cylinder intake valve sides.

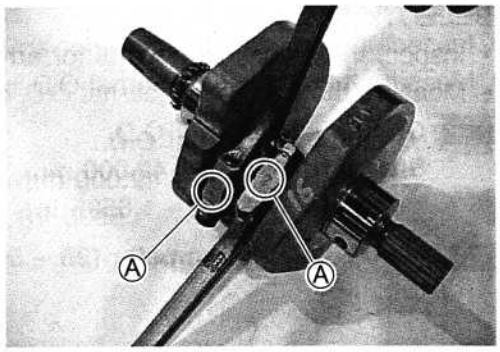

- Apply engine oil and SUZUKI MOLY PASTE to the bearing cap bolts.

99000-25140: SUZUKI MOLY PASTE

- Tighten the bearing cap bolt as following two steps.

Conrod bearing cap bolt
(Initial): 35 N·m (3.5 kgf·m, 25.5 lb-ft)
(Final): 67 N·m (6.7 kgf·m, 48.5 lb-ft)

- Apply engine oil to the conrod big end side surfaces.
- Check the conrod movement for smooth turning.

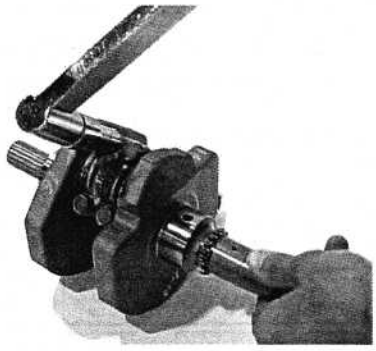

CRANKSHAFT JOURNAL BEARING

INSPECTION

- Inspect the crankshaft journal bearings for any damage.
- If any, replace them with a specified set of bearings.

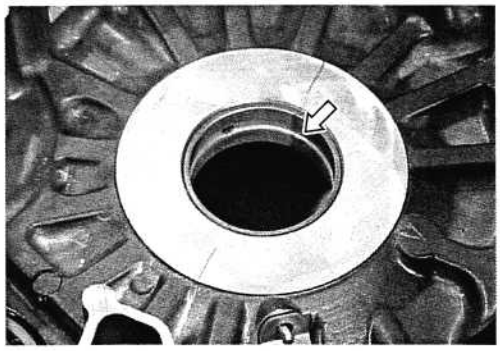

SELECTION

- Inspect the crankshaft journal for any damage.
- Measure the crankshaft journal O.D. by using the special tool.

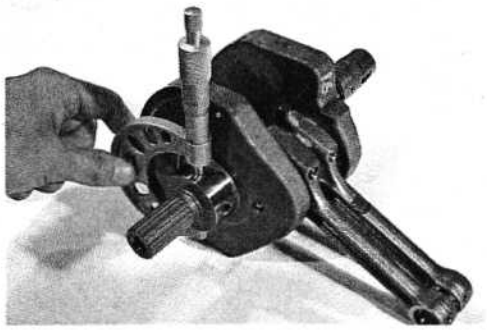

DATA Crankshaft journal O.D.
Standard: 41.985 – 42.000 mm
(1.6529 – 1.6535 in)

TOOL 09900-20202: Micrometer (25 – 50 mm)

- Select the specified bearings from the crankcase bore I.D. code. The crankcase bore I.D. code Ⓐ "A", "B" or "C", is stamped on the inside of each crankcase half.

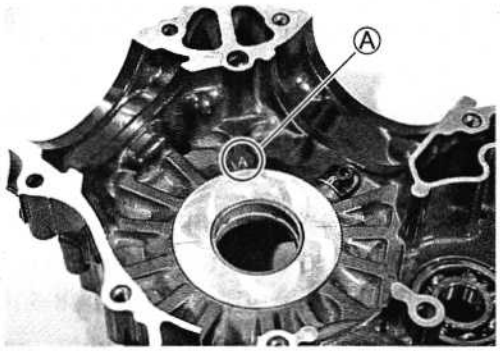

Bearing selection table

	Crankcase I.D. Ⓐ		
	A	B	C
Bearing color	Green	Black	Brown

DATA Crank shaft journal I.D.

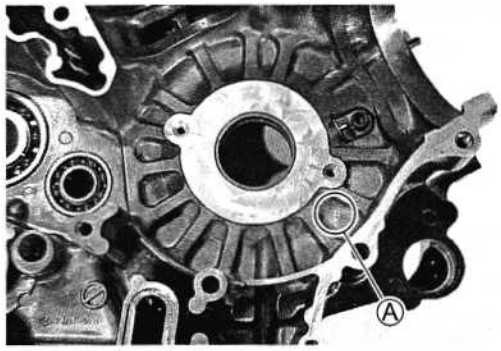

I.D. code Ⓐ	I.D. specification
A	46.000 – 46.006 mm (1.8110 – 1.8113 in)
B	46.0061 – 46.012 mm (1.8113 – 1.8115 in)
C	46.0121 – 46.018 mm (1.8115 – 1.8117 in)

DATA Bearing thickness

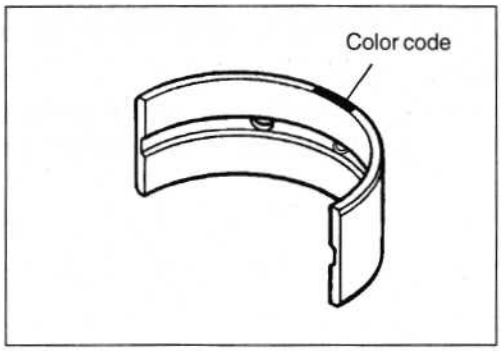

Color (Part No.)	Thickness
Green (12229-19F10-0A0)	1.993 – 1.996 mm (0.0785 – 0.0786 in)
Black (12229-19F10-0B0)	1.996 – 1.999 mm (0.0786 – 0.0787 in)
Brown (12229-19F10-0C0)	1.999 – 2.002 mm (0.0787 – 0.0788 in)

▲ CAUTION

Bearing must be replaced as a set.

REPLACEMENT

- Use the special tool to replace the crankshaft journal bearings. The replacement procedure is as follows.

TOOL 09913-60220: Journal bearing remover/installer

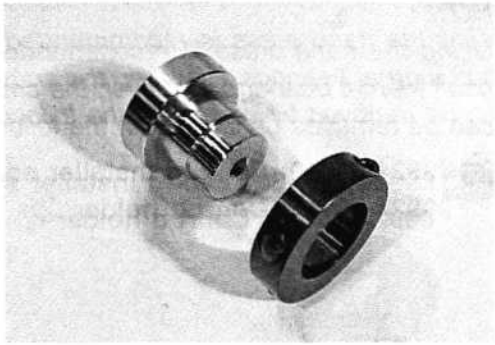

REMOVAL

- Remove the left side journal bearing retainer.

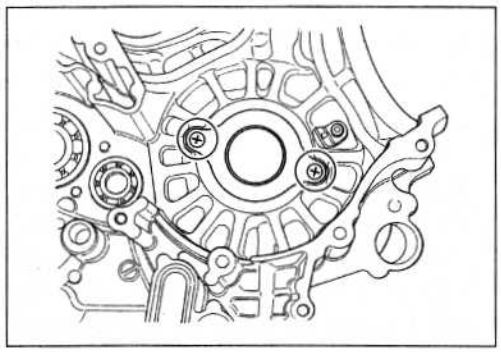

- Set the special tool as shown to remove the crankshaft journal bearings.

NOTE:
Remove the crankshaft journal bearings in only one direction, from inside to outside of each crankcase half.

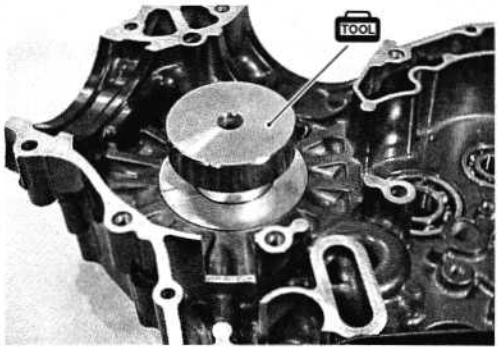

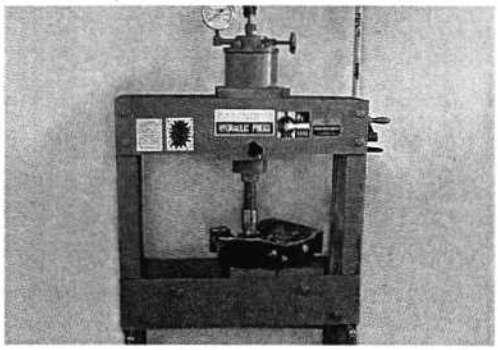

- Gradually press out the bearing with the special tool by using the hand-press.

⚠ CAUTION

The removed bearings must be replaced with new ones.

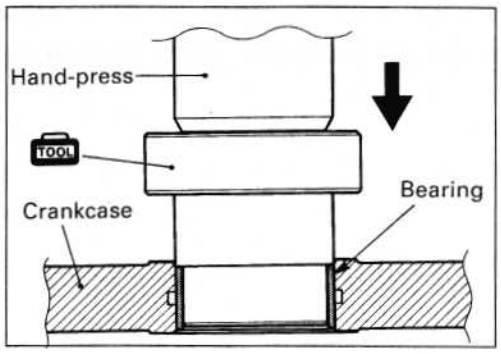

NOTE:
Using the hand-press is recommended to remove the crankshaft journal bearings. However, the crankshaft journal bearings can be removed by using with the following special tools.

TOOL 09924-84510: Bearing installer set ①
09924-20116: Conrod holder ②

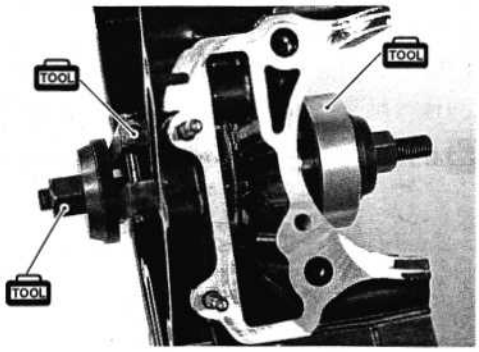

INSTALLATION

- Set the specified crankshaft journal bearings to the special tool.

▲ CAUTION

- **Before setting the bearing, apply enough engine oil to the special tool and bearings.**
- **When setting the bearing, align the bearing side with the engraved line Ⓐ and also the bearing edge with the mating surface of the special tool.**

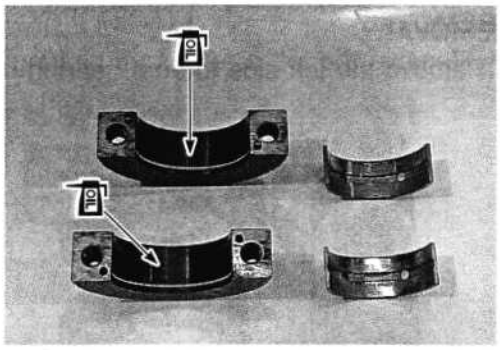

NOTE:
The upper and lower bearings are same.

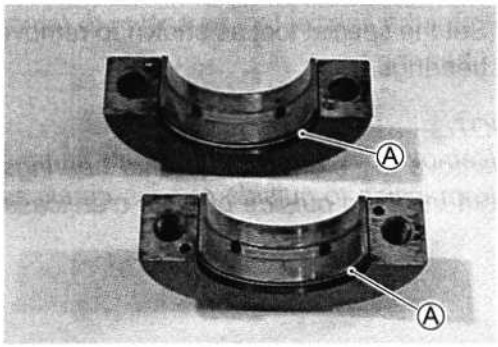

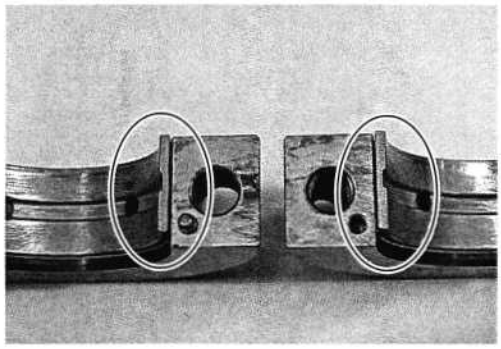

- Tighten the special tool bolt to the specified torque.

Special tool bolt: 23 N·m (2.3 kgf·m, 16.5 lb-ft)

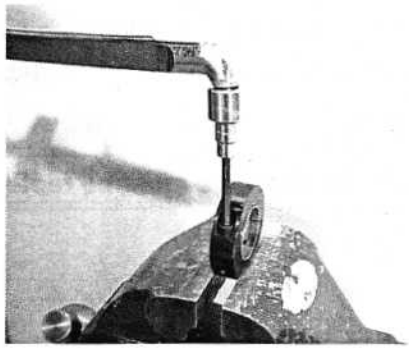

⚠ CAUTION

Before installing the bearings, lightly shave off the sharp edge part of the crankcase chamfer by using an oil-stone and wash the crankcase bore with enough engine oil.

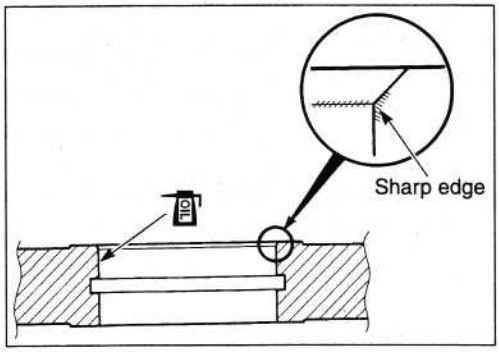

- Set the bearings installed in the special tool to the crankcase half as shown.

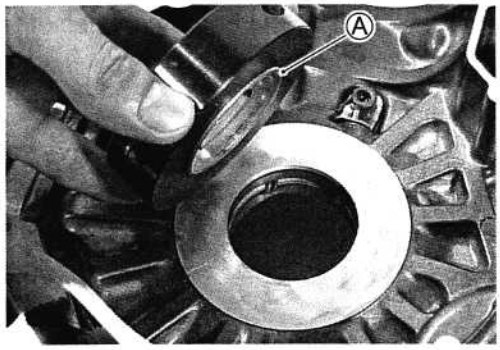

⚠ CAUTION

- *** Be sure the bearing protruded side Ⓐ faces the crankcase bore.**
- *** Align the bearing edges, special tool mating surface, with the line mark on the crankcase.**

NOTE:
Install the bearing from inside to outside of each crankcase halves.

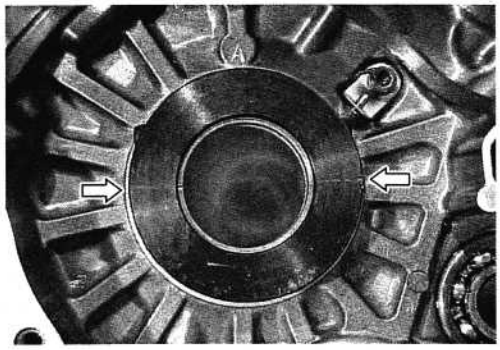

- Apply enough engine oil to the special tool and the bearings and then set the special tool carefully.
- Gradually press in the bearing into the main journal bore by using the hand-press until the special tool ① stops the special tool ②.

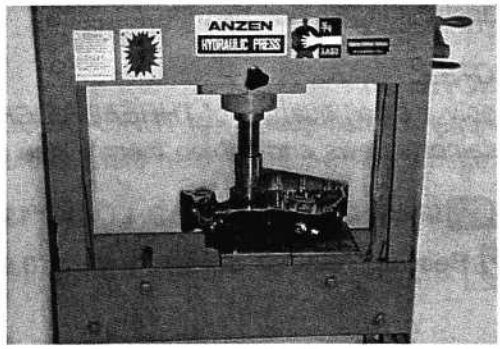

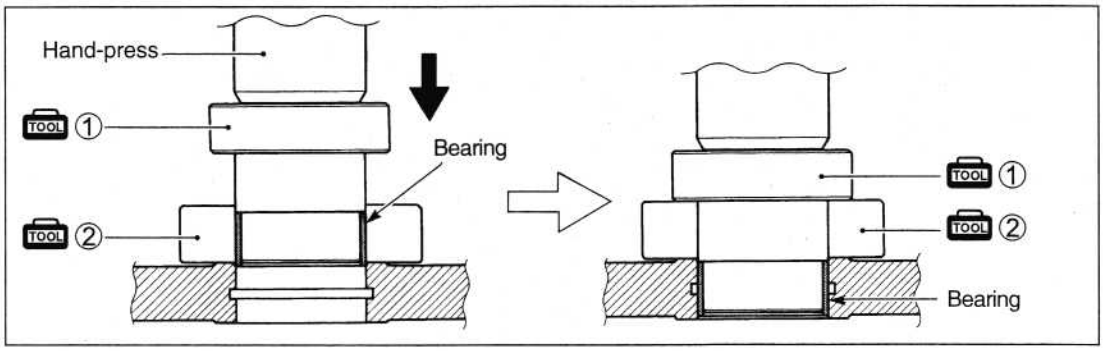

NOTE:
Using the hand-press is recommended to install the crankshaft journal bearings. However, the crankshaft journal bearings can be installed by using the following special tools.

TOOL 09924-84510: Bearing installer set ①
09924-20116: Conrod holder ②

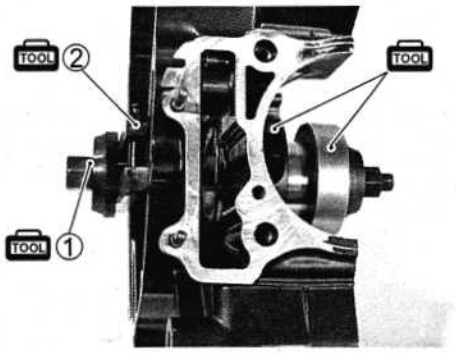

- After installing the bearings, check the bearing surface for any scratch or damage.

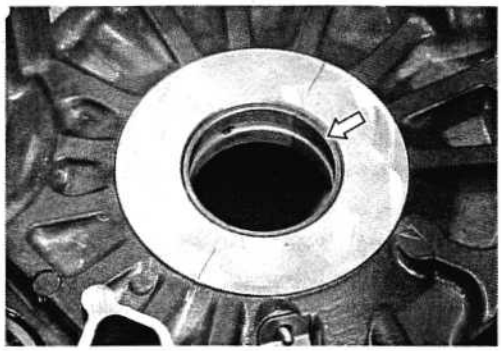

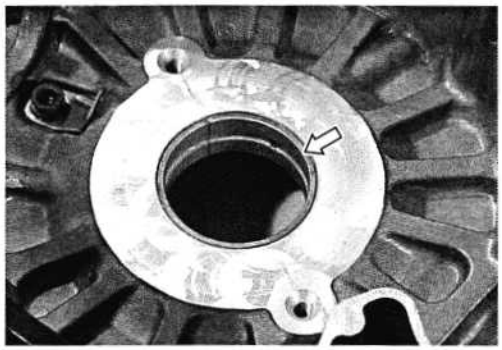

- Install the left side bearing retainer.

NOTE:
Apply a small quantity of THREAD LOCK "1342" to the bearing retainer screws and tighten them to the specified torque.

1342 99000-32050: THREAD LOCK "1342"

Bearing retainer screw: 8 N·m (0.8 kgf·m, 6.0 lb-ft)

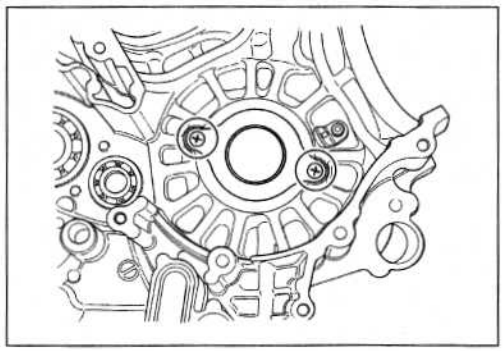

CRANKSHAFT THRUST BEARING

INSPECTION

- Install the crankshaft into the left crankcase half and position the thrust shim ① on the crankshaft.
- Install the right crankcase half and tighten the crankcase bolts temporally.

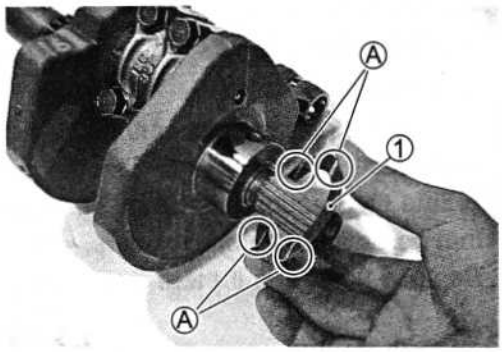

NOTE:

* *It is not necessary to apply SUZUKI BOND to the mating surface.*

* *The oil grooved face Ⓐ of thrust shim ① is faced to crankshaft web side.*

- Install the generator rotor with the key and tighten its bolt temporally. (☞ 3-92)
- Install the cam chain drive sprocket, primary drive gear and the water pump drive gear on the right end of the crankshaft and tighten primary drive gear bolt to the specified torque. (☞ 3-93)

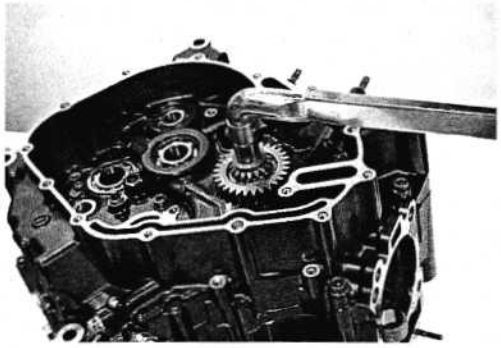

Primary drive gear bolt: 70 N·m (7.0 kgf·m, 50.5 lb-ft)

- Use a thickness gauge to measure the trust clearance at some places between right crankcase and thrust washer.

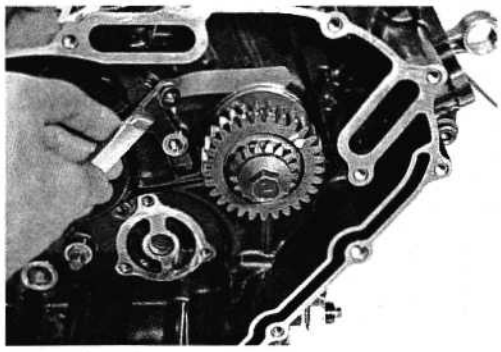

DATA Crankshaft thrust clearance
Standard: 0.050 – 0.110 mm (0.0020 – 0.0043 in)

TOOL 09900-20803: Thickness gauge

If the thrust clearance exceeds the standard range, adjust the thrust clearance by the following procedures.

REPLACEMENT

- Remove the thrust shim, and measure its thickness with a micrometer.
- Change the thrust shim with the other shim if the thrust clearance is incorrect.
- Perform the thrust clearance measurement described above once again checking to make sure it is within standard.

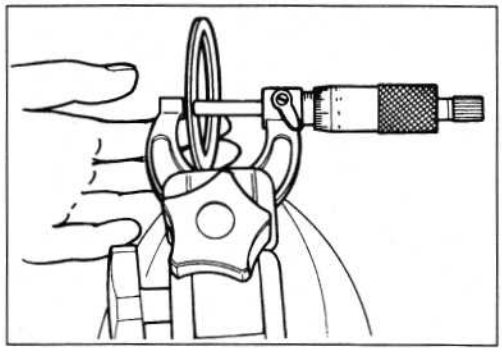

TOOL 09900-20205: Micrometer (0 – 25 mm)

Unit: mm (in)

Part number	Thrust shim thickness
12228-19F00-0A0	1.925 – 1.950 (0.0758 – 0.0768)
12228-19F00-0B0	1.950 – 1.975 (0.0768 – 0.0778)
12228-19F00-0C0	1.975 – 2.000 (0.0778 – 0.0787)
12228-19F00-0D0	2.000 – 2.025 (0.0787 – 0.0797)
12228-19F00-0E0	2.025 – 2.050 (0.0797 – 0.0807)
12228-19F00-0F0	2.050 – 2.075 (0.0807 – 0.0817)
12228-19F00-0G0	2.075 – 2.100 (0.0817 – 0.0827)
12228-19F00-0H0	2.100 – 2.125 (0.0827 – 0.0837)
12228-19F00-0I0	2.125 – 2.150 (0.0837 – 0.0846)
12228-19F00-0J0	2.150 – 2.175 (0.0846 – 0.0856)

CRANKCASE

BEARING AND OIL SEAL

Inspection

- Inspect the play of the bearings by hand while they are in the crankcase.
- Rotate the bearing inner race by hand to inspect it for abnormal noise and smooth rotation.
- Replace a bearing if there is anything unusual.

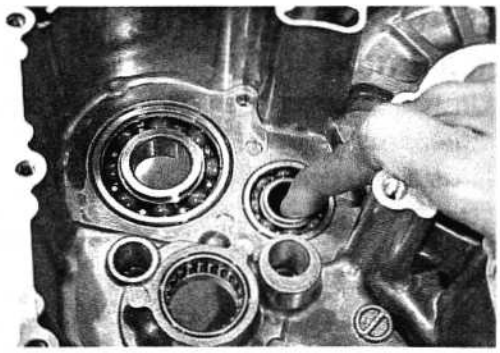

- Inspect the oil seal for any damage.

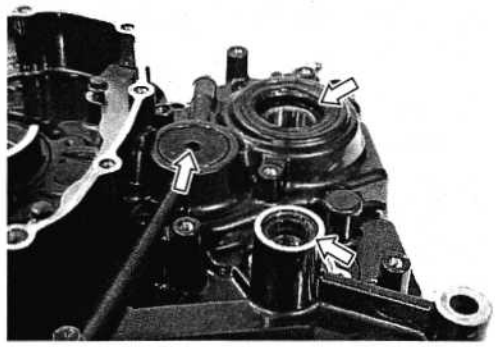

Removal

- Remove the oil seals using the special tool or a suitable bar.

TOOL 09913-50121: Oil seal remover

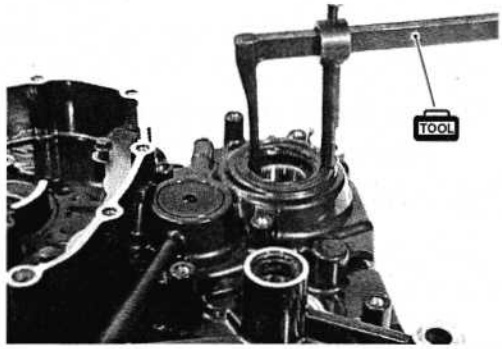

- Remove the bearing retainers.

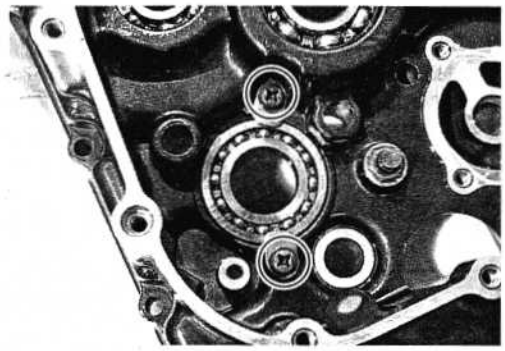

- Remove the crankcase bearings using the special tool.

TOOL 09921-20220: Bearing remover set

NOTE:
Select the suitable size attachment as following illustration.

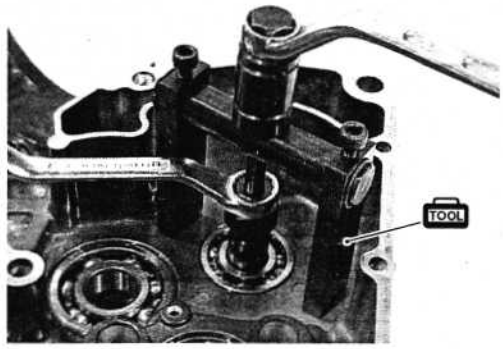

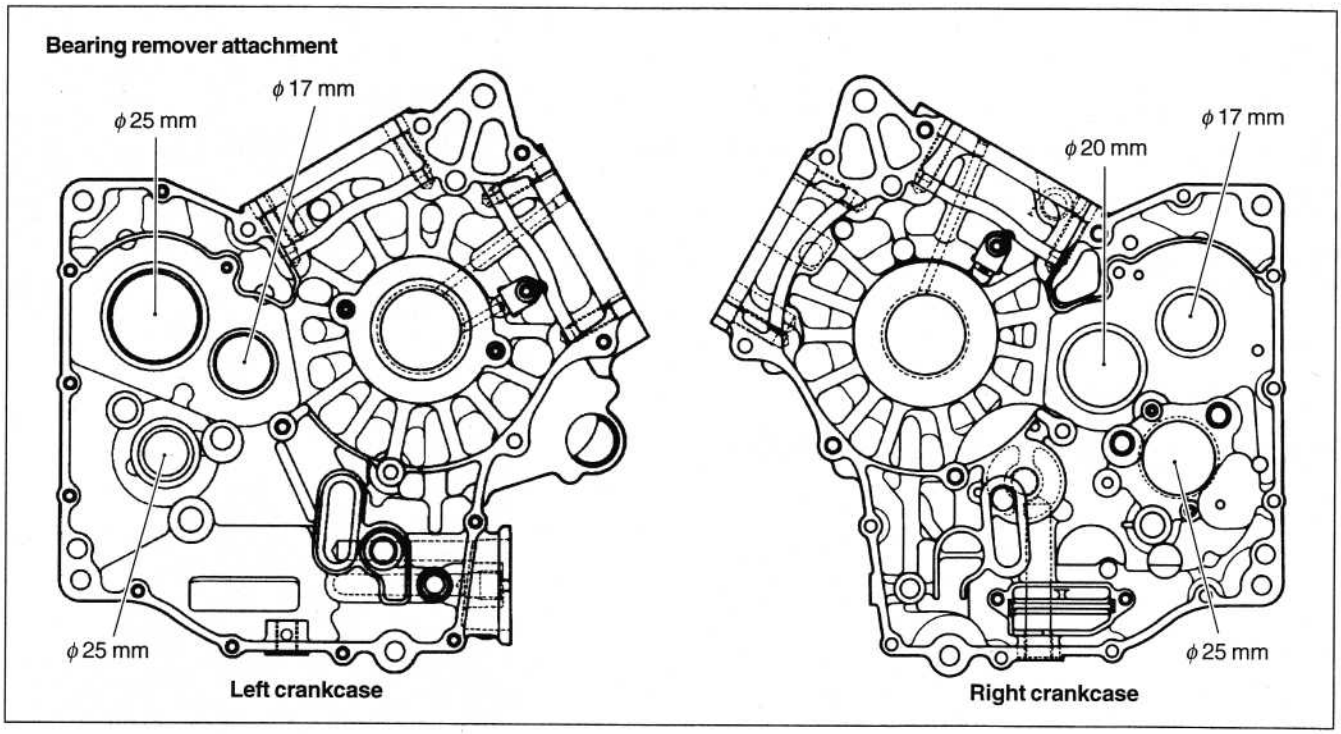

Installation

- Install the crankcase bearings and the oil seals using the special tool.

TOOL 09913-70210: Bearing installer set

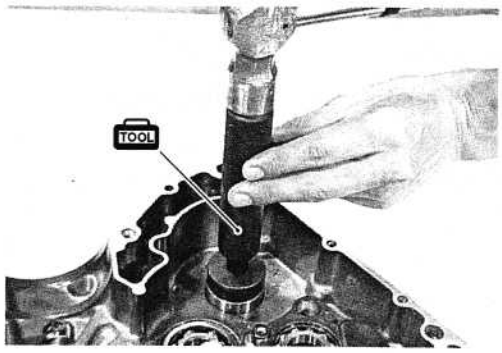

NOTE:

* *Select the suitable size attachment as following illustration.*
* *The sealed sides of the bearing ① and ② face outside.*

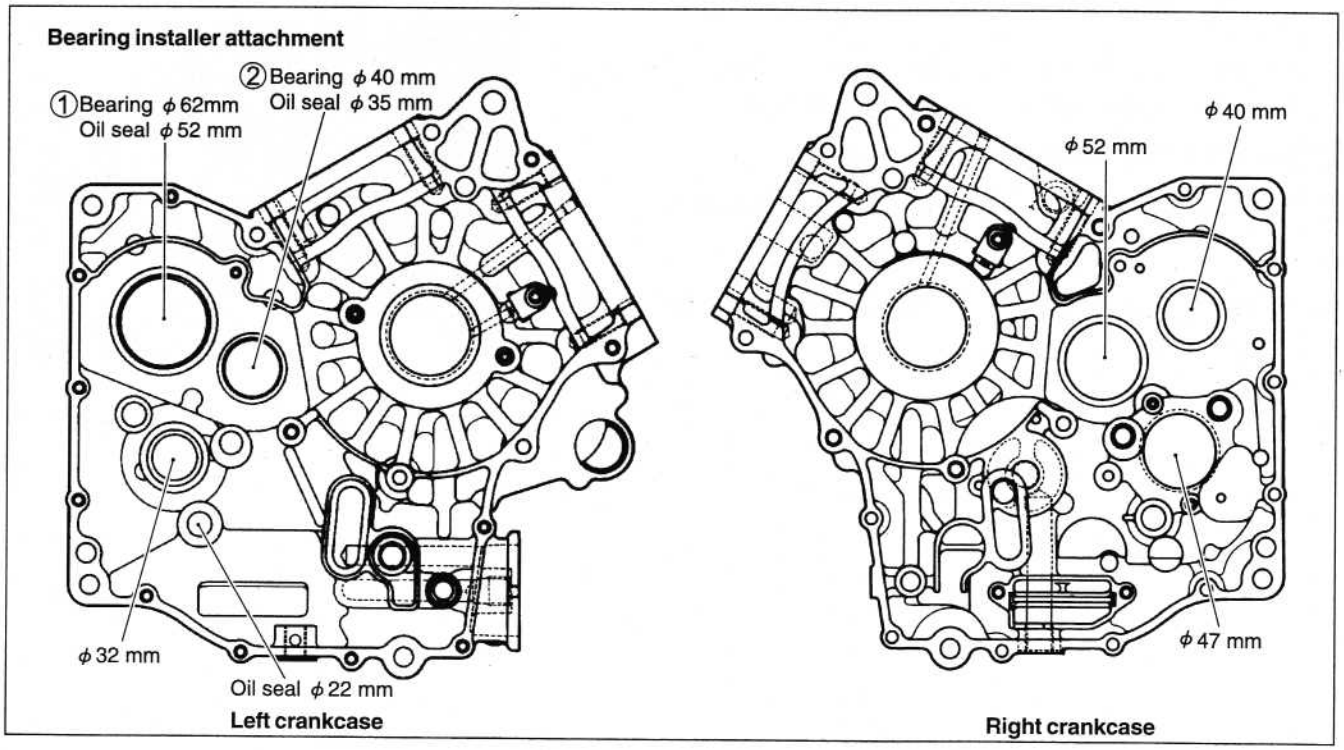

- Install the bearing retainers.

NOTE:
Apply a small quantity of THREAD LOCK "1342" to the bearing retainer screws and tighten them to the specified torque.

99000-32050: THREAD LOCK "1342"

Bearing retainer screw: 8 N·m (0.8 kgf·m, 6.0 lb-ft)

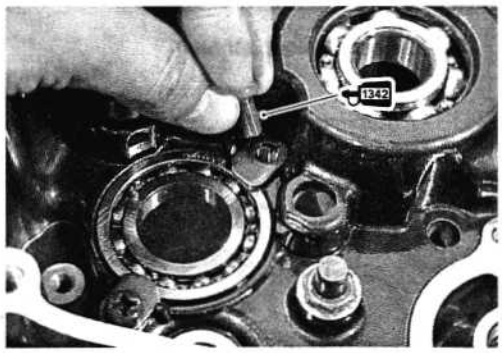

- Apply grease to the oil seal lip.

99000-25030: SUZUKI SUPER GREASE "A"

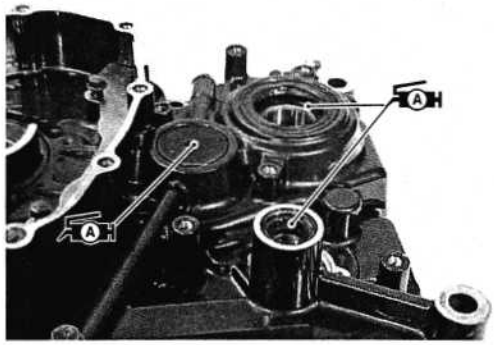

OIL PRESSURE SWITCH

Removal

- Remove the oil pressure switch ①.

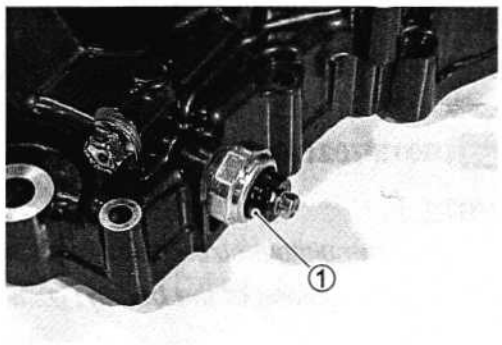

Inspection

(☞ 7-40)

Installation

- Apply SUZUKI BOND "1207B" to the thread part of the oil pressure switch ① and tighten it to the specified torque.

99104-31140: SUZUKI BOND "1207B"

Oil pressure switch: 14 N·m (1.4 kgf·m, 10.0 lb-ft)

NOTE:
Be careful not to apply SUZUKI BOND "1207B" to the hole of the thread end.

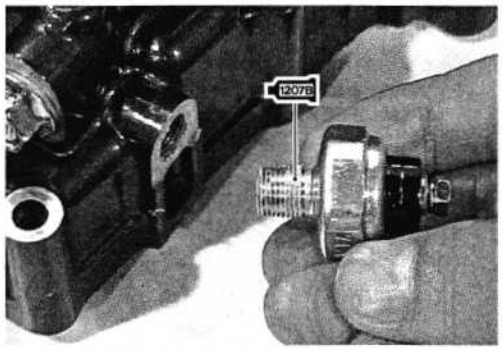

OIL PRESSURE REGULATOR

Inspection

- Remove the oil pressure regulator ①.

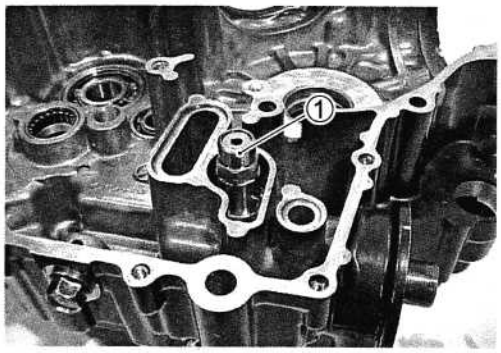

- Check the operation of the oil pressure regulator by pushing on the piston with a proper bar.
- If the piston does not operate, replace the oil pressure regulator with a new one.

- Tighten the oil pressure regulator to the specified torque.

Oil pressure regulator: 27 N·m (2.7 kgf·m, 19.5 lb-ft)

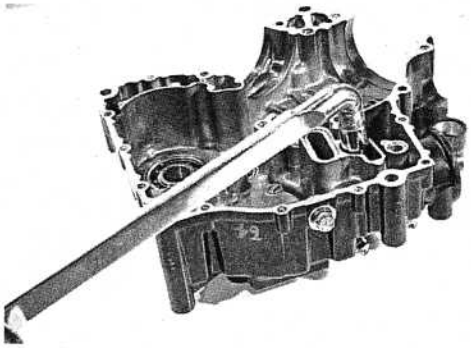

OIL STRAINER CLEANING

- Remove the oil strainer plate ①.

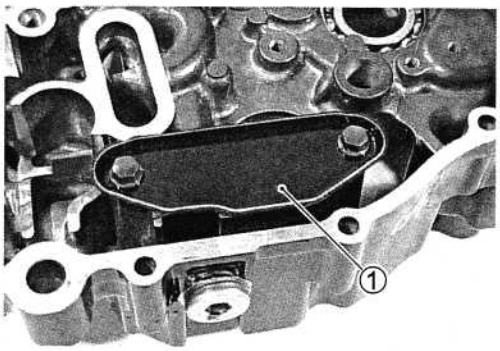

- Remove the oil strainer.

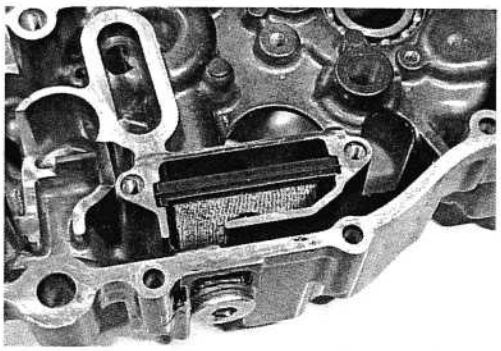

- Clean the oil strainer with a compressed air.

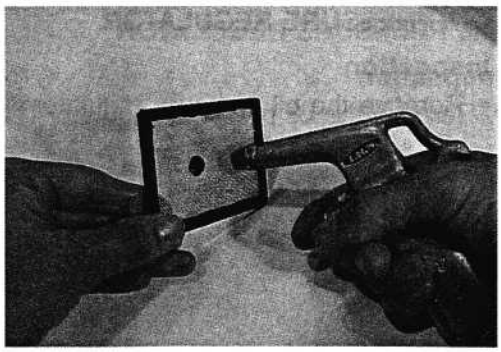

- Install the oil strainer ①.

NOTE:
The projection Ⓐ of the oil strainer ① faces to the bottom.

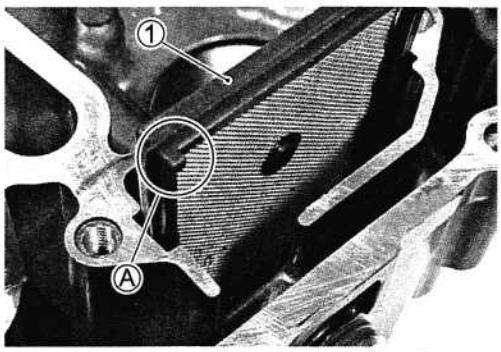

- Install the oil strainer plate.

NOTE:
Apply a small quantity of THREAD LOCK "1342" to the oil strainer plate screws and tighten them to the specified torque.

1342 99000-32050: THREAD LOCK "1342"

Oil strainer plate screw: 10 N·m (1.0 kgf·m, 7.0 lb-ft)

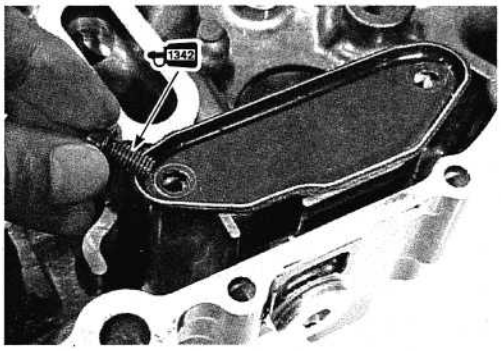

OIL PLATE

- When installing the oil plate, apply a small quantity of THREAD LOCK "1342" to its bolts and tighten them to the specified torque.

1342 99000-32050: THREAD LOCK "1342"

Oil plate bolt: 10 N·m (1.0 kgf·m, 7.0 lb-ft)

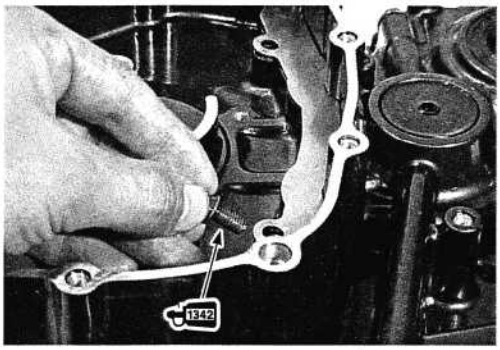

- Install the oil plate ① to the right crankcase half.

NOTE:
The oil plate ① has been installed to the fllowing engine.

Engine serial number : From P503-102261
: From P505-100114

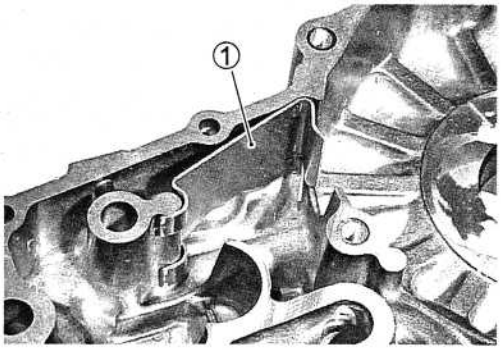

OIL JET

Removal

- Remove the piston cooling oil jets ① from left and right crankcase halves.

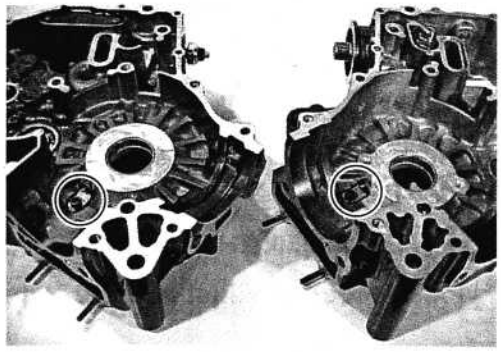

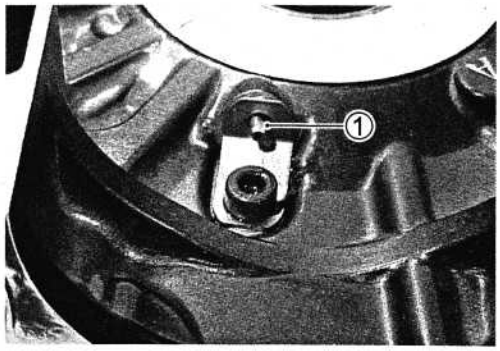

- Remove the oil jet ② from left crankcase half.

NOTE:
If it is difficult to remove the oil jet, use a sting.

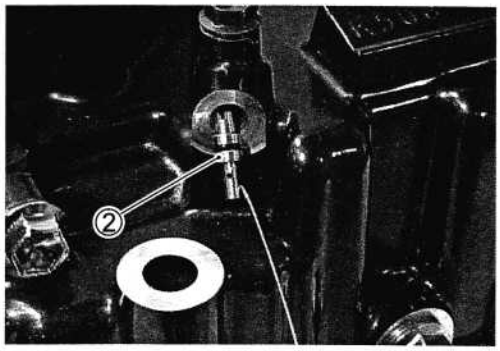

Inspection and cleaning

- Check the oil jets for clogging.
- If they are clogged, clean their oil passage with a proper wire and compressed air.

① Piston cooling oil jet
② Oil jet (#14) (For transmission)
③ Oil jet (#14) (For each cylinder head)

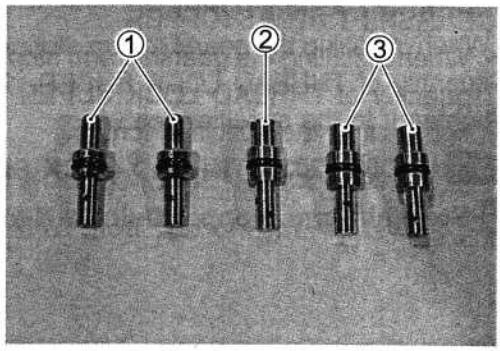

Installation

- Fit the new O-rings to each oil jets.

⚠ CAUTION

Use the new O-rings to prevent oil leakage.

NOTE:
Apply engine oil to the O-rings when installing the oil jets.

- Install the piston cooling oil jet to the left and right crankcase halves.

NOTE:
Apply a small quantity of THREAD LOCK "1342" to the bolts and tighten them to the specified torque.

1342 99000-32050: THREAD LOCK "1342"

Piston cooling oil jet bolt: 10 N·m (1.0 kgf·m, 7.0 lb-ft)

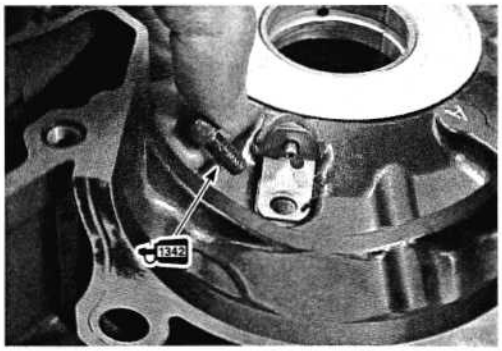

- Install the oil jet ① to the left crankcase half.

NOTE:
Install the oil jet into the oil hole fully.

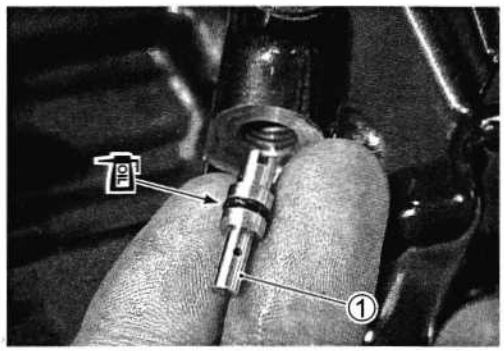

- Tighten the oil gallery plug ② to the specified torque.

Oil gallery plug (M8): 18 N·m (1.8 kgf·m, 13.0 lb-ft)

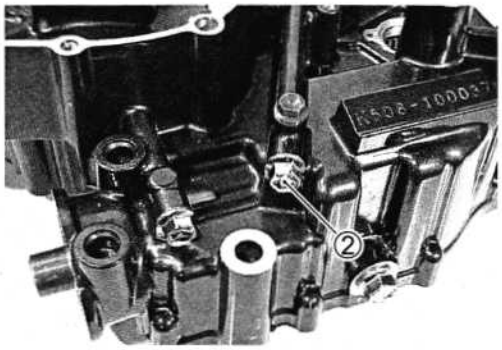

GEARSHIFT ARM STOPPER

- When installing the gearshift arm stopper bolt ①, apply a small quantity of THREAD LOCK SUPER "1303" to its thread and tighten it to the specified torque.

1303 99000-32030: THREAD LOCK SUPER "1303"

Gearshift arm stopper bolt: 23 N·m (2.3 kgf·m, 16.5 lb-ft)

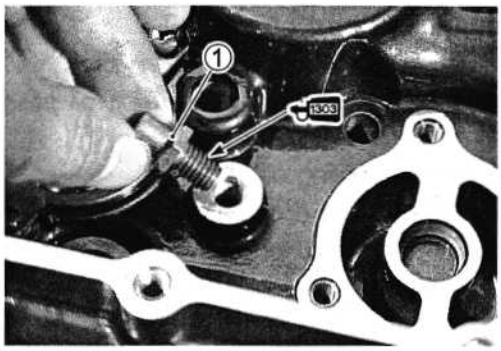

CLUTCH

CLUTCH DRIVE PLATES

NOTE:
Wipe off engine oil from the clutch drive plates with a clean rag.

- Measure the thickness of drive plates with a vernier calipers.
- If each drive plate is not within the standard range, replace it with a new one.

DATA Drive plate thickness
Standard (No.1): 2.92 – 3.08 mm (0.115 – 0.121 in)
(No.2): 3.42 – 3.58 mm (0.135 – 0.141 in)

TOOL 09900-20102: Vernier calipers

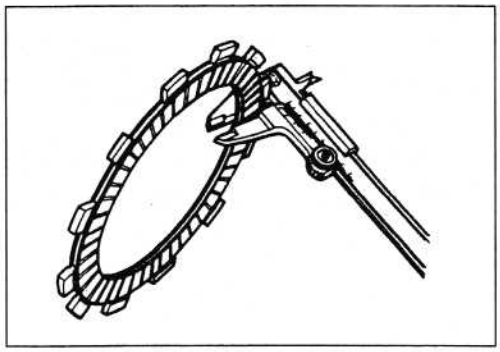
Measuring thickness

- Measure the claw width of drive plates with a vernier calipers.
- Replace the drive plates found to have worn down to the limit.

DATA Drive plate claw width (No.1 and No.2)
Service Limit: 15.1 mm (0.59 in)

TOOL 09900-20102: Vernier calipers

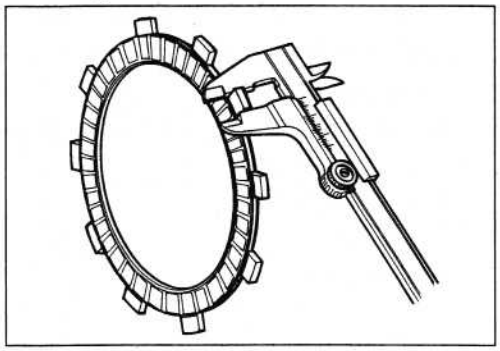
Measuring claw width

- Inspect the dampers of the No.2 clutch drive plate for any abnormality.

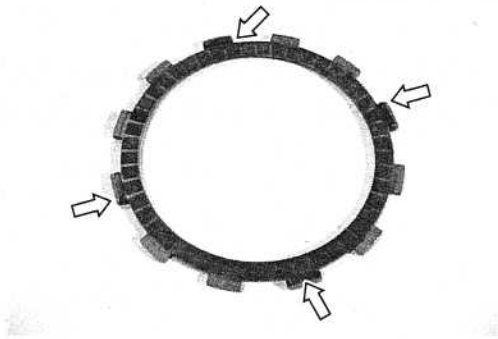

CLUTCH DRIVEN PLATES

NOTE:
Wipe off engine oil from the clutch driven plates with a clean rag.

- Measure each driven plate for distortion with a thickness gauge and surface plate.
- Replace driven plates which exceed the limit.

DATA Driven plate distortion (No.1 and No.2)
Service Limit: 0.10 mm (0.004 in)

TOOL 09900-20803: Thickness gauge

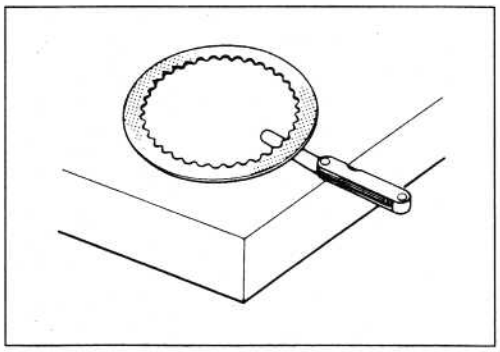
Measuring distortion

CLUTCH SPRING

Inspection

- Measure the free length of each coil spring with a vernier calipers, and compare the length with the specified limit.
- Replace all the springs if any spring is not within the limit.

DATA Clutch spring free length
Service Limit: 56.0 mm (2.20 in)

TOOL 09900-20102: Vernier calipers

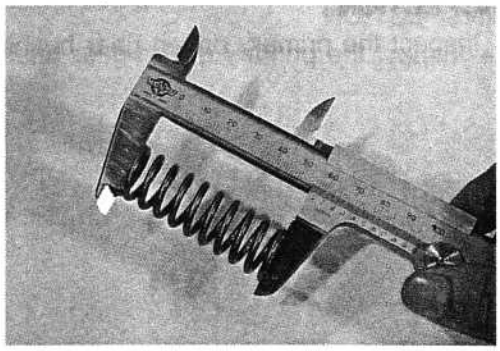

CLUTCH BEARING INSPECTION

- Inspect the clutch release bearing for any abnormality, particularly cracks, to decide whether it can be reused or should be replaced.
- Smooth engagement and disengagement of the clutch depends on the condition of this bearing.

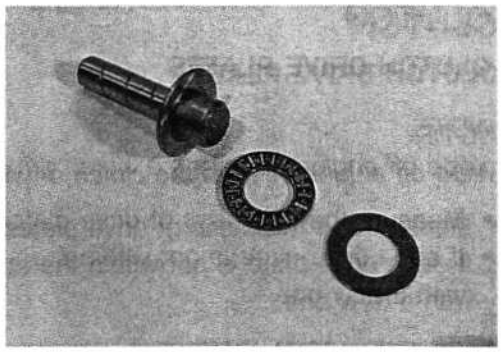

PRIMARY DRIVEN GEAR ASSEMBLY

DISASSEMBLY

- Remove the circlip ①.
- Remove the oil pump drive gear ② and the pin ③.

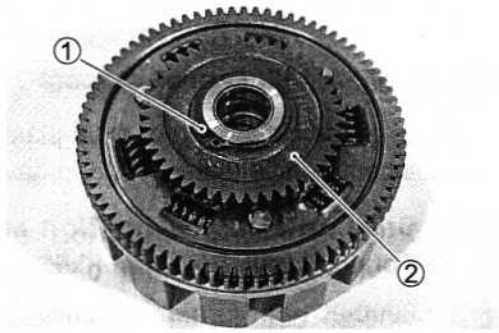

REASSEMBLY

- Install the pin ③.
- Align the oil pump drive gear slot Ⓐ with the pin ③.
- Face the letter Ⓑ of the oil pump drive gear to outside.

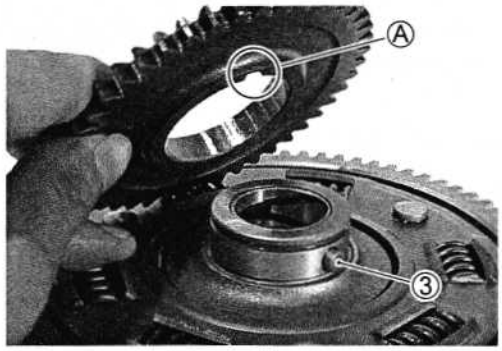

- Install the circlip.

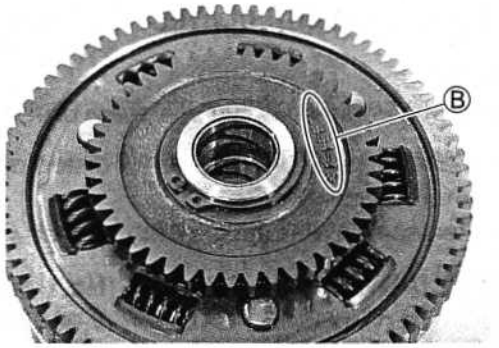

INSPECTION

- Inspect the primary driven gear bushing for any damage.

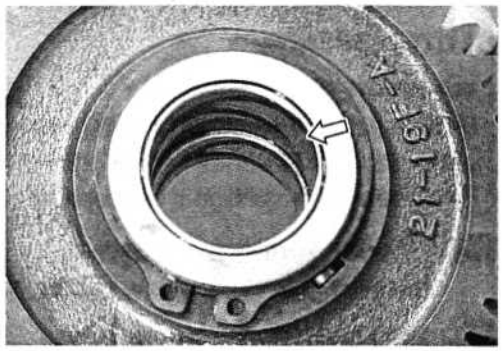

GEARSHIFT SHAFT/GEARSHIFT ARM

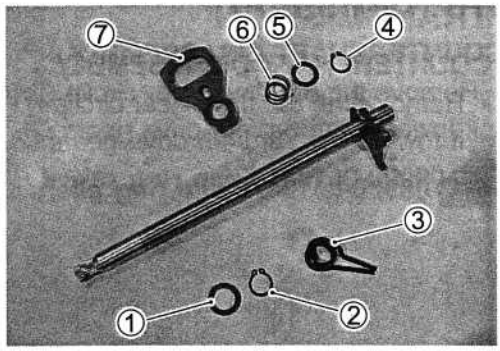

DISASSEMBLY

- Remove the following parts from the gearshift shaft/gearshift arm.

① Washer
② Circlip
③ Gearshift shaft return spring
④ Circlip
⑤ Washer
⑥ Plate return spring
⑦ Gearshift cam drive plate

TOOL 09900-06107: Snap ring pliers

INSPECTION

- Check the gearshift shaft/gearshift arm for wear or bend.
- Check the return springs for damage or fatigue.

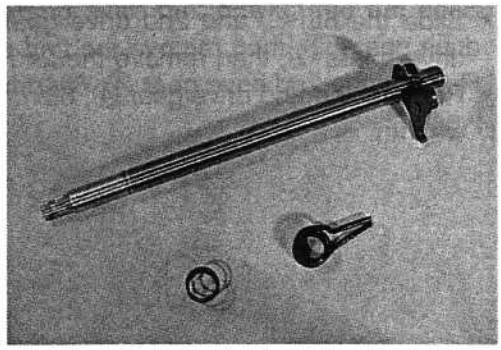

REASSEMBLY

- Install the following parts to the gearshift shaft/gearshift arm as shown in the right illustration.

① Washer
② Circlip
③ Gearshift shaft return spring
④ Circlip
⑤ Washer
⑥ Plate return spring
⑦ Gearshift cam drive plate

TOOL 09900-06107: Snap ring pliers

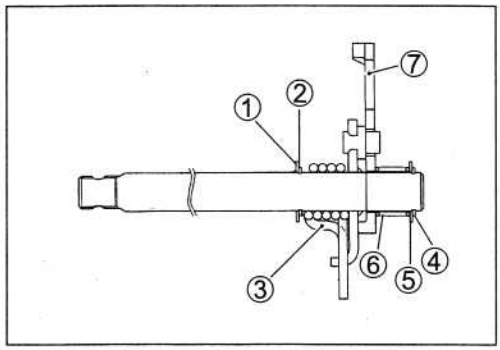

NOTE:
When installing the gearshift shaft return spring ③, position the stopper Ⓑ of the gearshift arm between the shaft return spring ends Ⓐ.

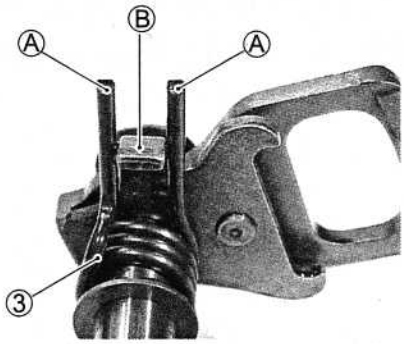

TRANSMISSION

COUNTERSHAFT DISASSEMBLY

- Remove the 6th drive gear circlip ① from its groove and slide it towards the 3rd/4th drive gears ②.

TOOL 09900-06104: Snap ring pliers

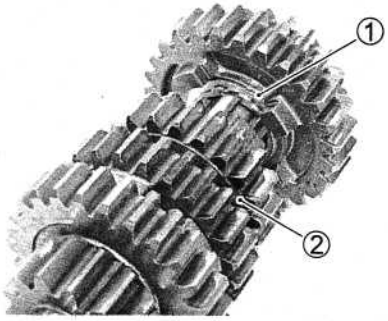

- Slide the 6th ③ and 2nd drive gears ④ toward the 3rd/4th drive gears ②, then remove the 2nd drive gear circlip ⑤.
- Remove the 2nd drive gear ④, 6th drive gear ③, bushing and washer.

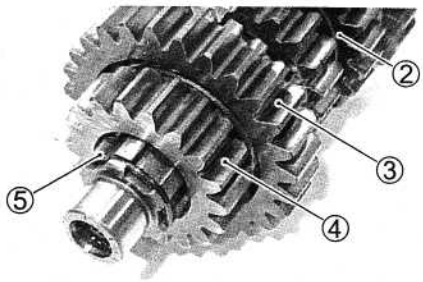

- Remove the circlip ① and 3rd/4th drive gears ②.

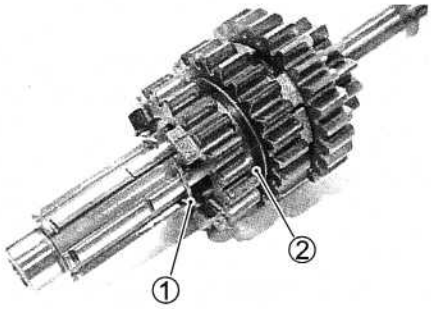

- Remove the circlip ⑤, washer ⑥ and 5th drive gear ⑦.

TOOL 09900-06104: Snap ring pliers

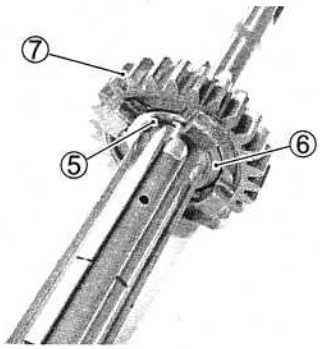

- Remove the 5th drive gear bushing ⑧.

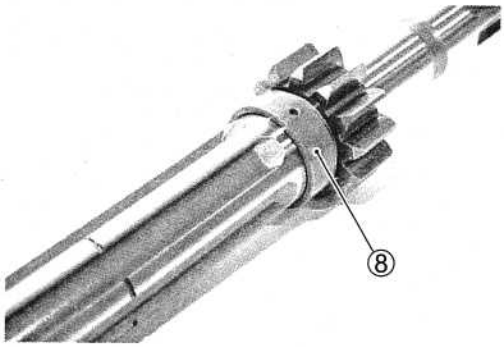

DRIVESHAFT DISASSEMBLY

- Remove the washer ① and 1st driven gear ②.

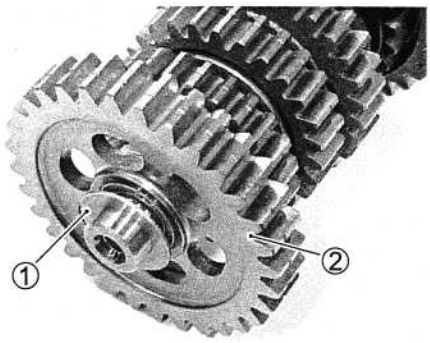

- Remove the 1st driven gear bushing ③, washer ④ and 5th driven gear ⑤.

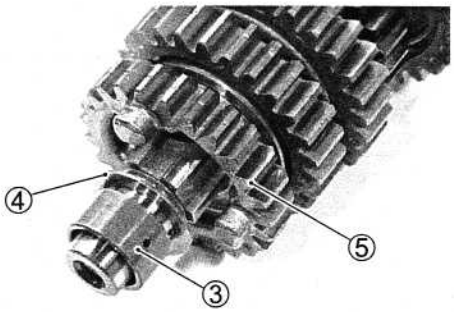

- Remove the circlip ⑥, washer ⑦ and 4th driven gear ⑧.

TOOL 09900-06104: Snap ring pliers

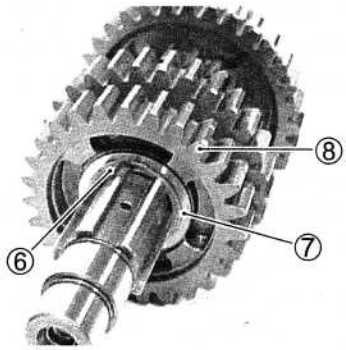

- Remove the 4th driven gear bushing ⑨, lock washers ⑩ and 3rd driven gear ⑪.

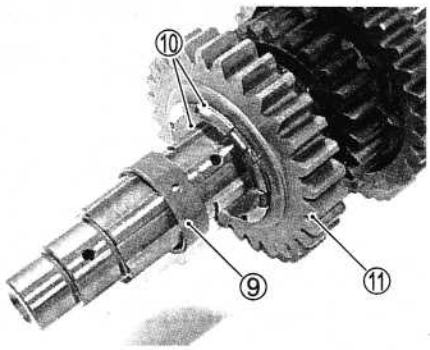

- Remove the 3rd driven gear bushing ⑫ and washer ⑬.

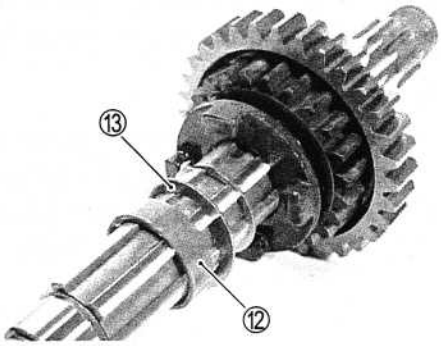

- Remove the circlip ① and 6th driven gear ②.

TOOL 09900-06104: Snap ring pliers

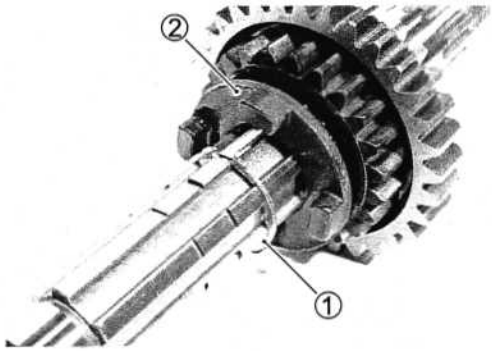

- Remove the circlip ③ and 2nd driven gear bushing ④.

TOOL 09900-06104: Snap ring pliers

- Remove the 2nd driven gear ⑤.

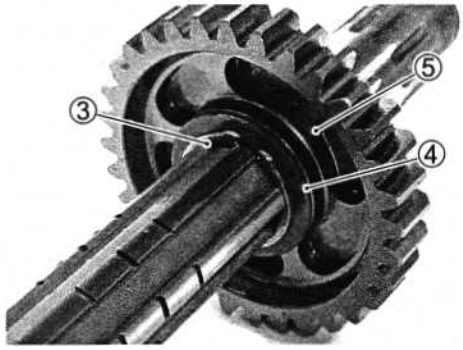

REASSEMBLY

Assemble the countershaft and driveshaft in the reverse order of disassembly. Pay attention to the following points:

NOTE:

* *Rotate the bushings by hand to inspect for smooth rotation. Replace the bushings if there is anything unusual.*
* *Before installing the gears, lightly coat moly paste or engine oil to the driveshaft and countershaft.*
* *Before installing the O-ring, apply grease to it.*

M 99000-25140: SUZUKI MOLY PASTE

A 99000-25030: SUZUKI SUPER GREASE "A"

⚠ CAUTION

* **Never reuse a circlip. After a circlip has been removed from a shaft, it should be discarded and a new circlip must be installed.**
* **When installing a new circlip, do not expand the end gap larger than required to slip the circlip over the shaft.**
* **After installing a circlip, make sure that it is completely seated in its groove and securely fitted.**

NOTE:

When reassembling the transmission, attention must be given to the locations and positions of washers and circlips. The cross sectional view shows the correct position of the gears, bushings, washers and circlips. *(☞ 3-82)*

- When installing a new circlip, pay attention to the direction of the circlip. Fit it to the side where the thrust is as shown in the illustration.

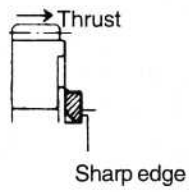

▲ CAUTION

When installing the 6th drive gear, 3rd driven gear and 4th driven gear bushings onto the shaft, align the shaft oil hole Ⓐ with the bushing oil hole Ⓑ.

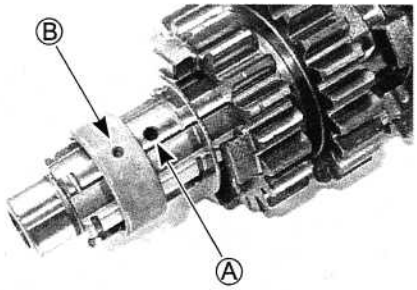

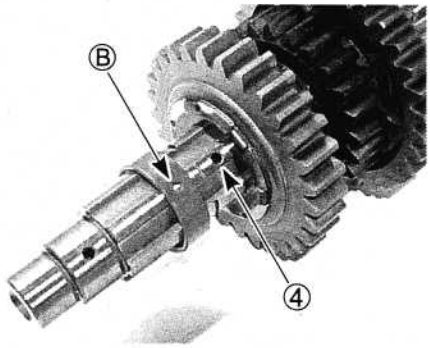

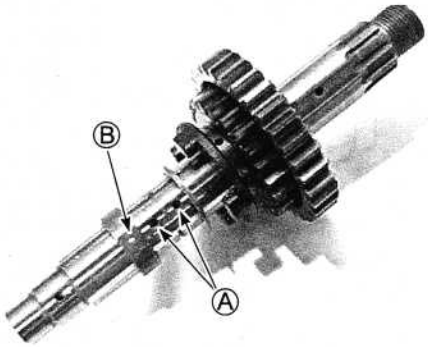

- After installing the 3rd driven gear onto the driveshaft, install lock washer #2 ① onto the driveshaft, and position it so it fits into the groove.
- Then, fit lock washer #1 ② into lock washer #2 ①.

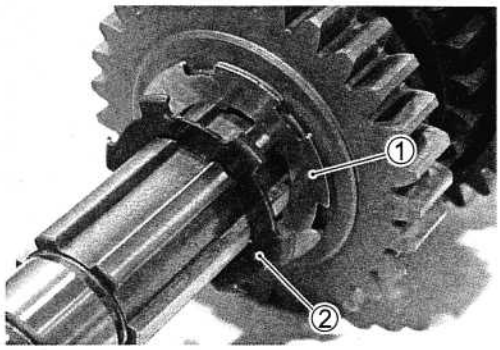

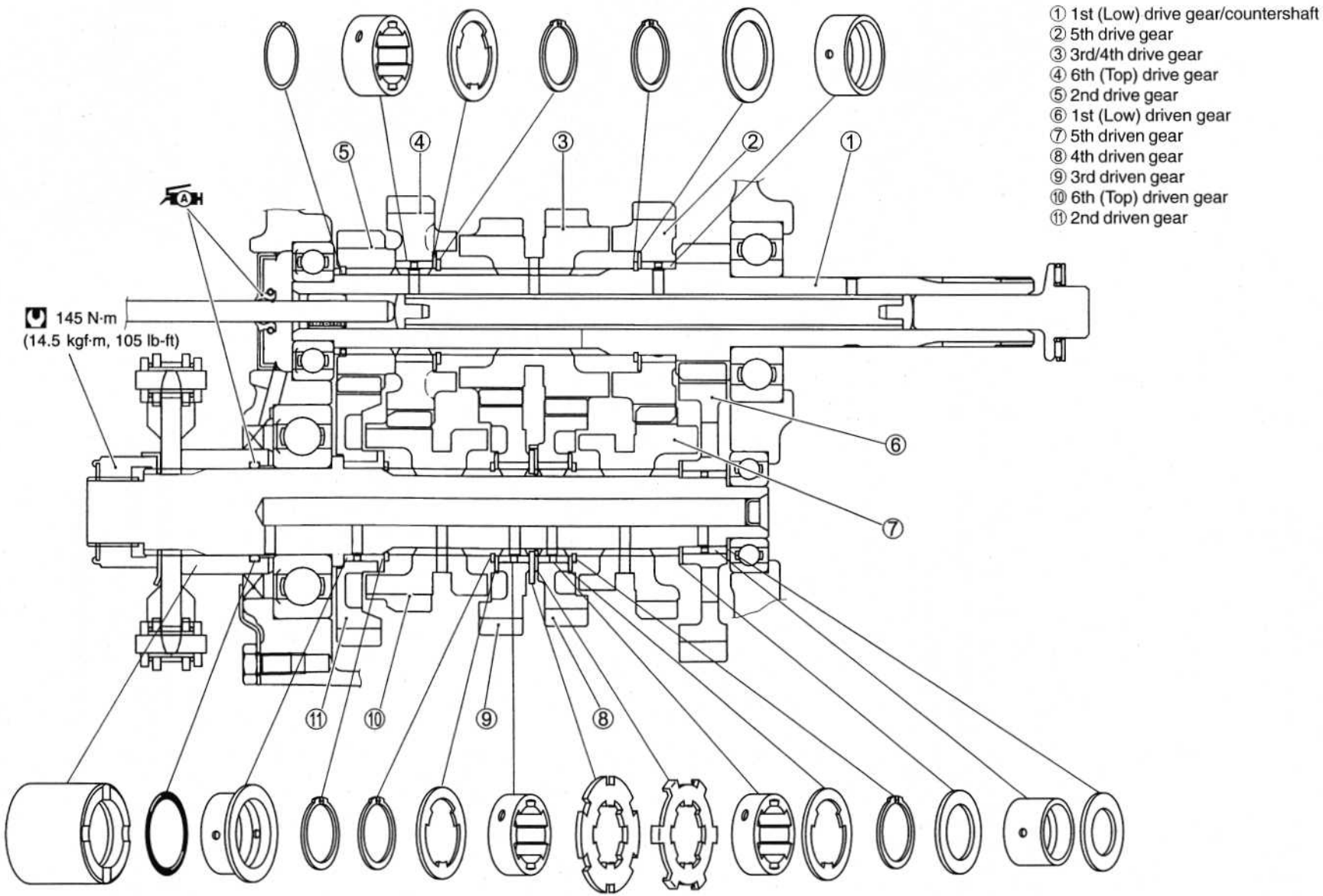
① 1st (Low) drive gear/countershaft
② 5th drive gear
③ 3rd/4th drive gear
④ 6th (Top) drive gear
⑤ 2nd drive gear
⑥ 1st (Low) driven gear
⑦ 5th driven gear
⑧ 4th driven gear
⑨ 3rd driven gear
⑩ 6th (Top) driven gear
⑪ 2nd driven gear
145 N·m
(14.5 kgf·m, 105 lb-ft)
A

GEARSHIFT FORK TO GROOVE CLEARANCE

- Using a thickness gauge, check the gearshift fork clearance in the groove of its gear.
- The clearance for each gearshift fork plays an important role in the smoothness and positiveness of the shifting action.

DATA Shift fork to groove clearance
Service Limit: 0.50 mm (0.020 in)

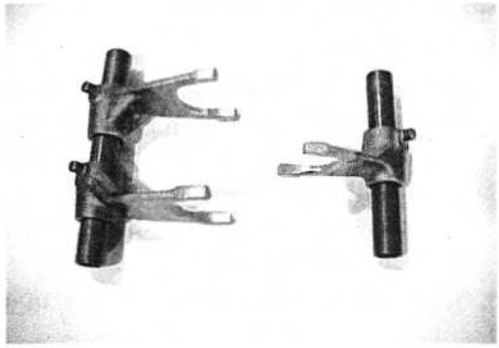

- If the clearance checked is noted to exceed the limit specified, replace the fork or its gear, or both.

TOOL 09900-20803: Thickness gauge
09900-20102: Vernier calipers

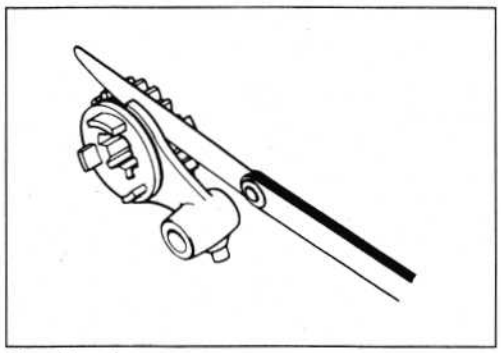

Checking clearance

GEARSHIFT FORK GROOVE WIDTH

- Measure the gearshift fork groove width using the vernier calipers.

DATA Shift fork groove width
Standard: 5.5 – 5.6 mm (0.217 – 0.220 in)

TOOL 09900-20102: Vernier calipers

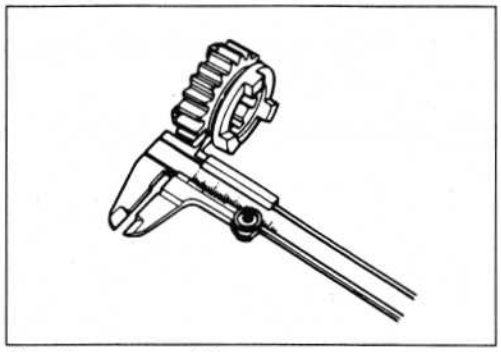

Checking groove width

GEARSHIFT FORK THICKNESS

- Measure the gearshift fork thickness using the vernier calipers.

DATA Shift fork thickness
Standard: 5.3 – 5.4 mm (0.209 – 0.213 in)

TOOL 09900-20102: Vernier calipers

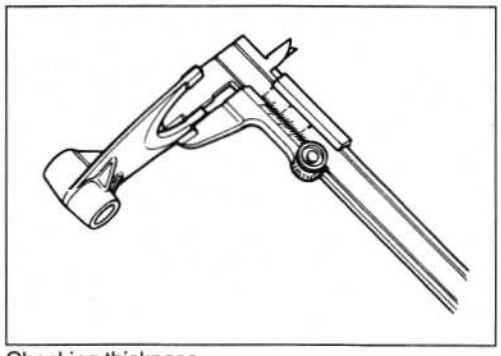

Checking thickness

STARTER CLUTCH

INSPECTION

- Install the starter driven gear onto the starter clutch and turn the starter driven gear by hand to inspect the starter clutch for a smooth movement. The gear turns in one direction only. If a large resistance is felt for rotation, inspect the starter clutch or the starter clutch contacting surface on the starter driven gear for wear and damage.
- If they are found to be damaged, replace them with new ones.

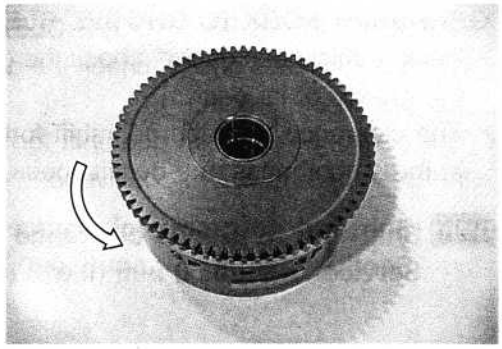

- Inspect the starter driven gear bearing for any damage.

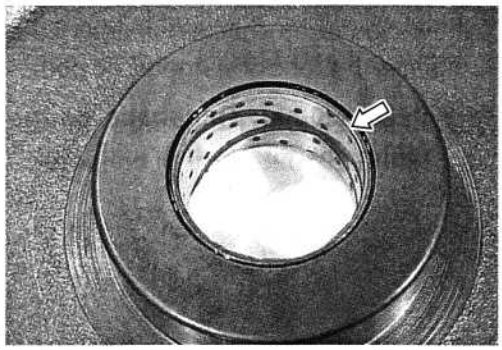

DISASSEMBLY

- Hold the generator rotor using the special tool and remove the starter clutch bolts.

TOOL 09930-44530: Rotor holder

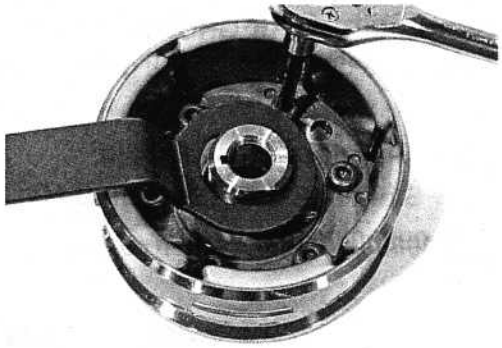

- Remove the one way clutch ② from the guide ①.

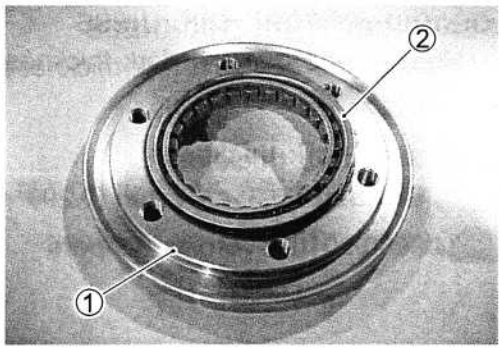

REASSEMBLY

- When fitting the one way clutch ② to the guide ①, position flange side Ⓐ of one way clutch to the rotor side.

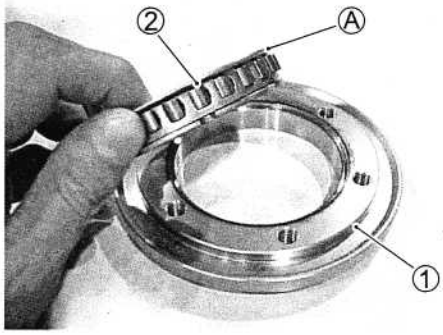

- Be sure to seat the flange Ⓐ of the one way clutch ② to the guide ①.

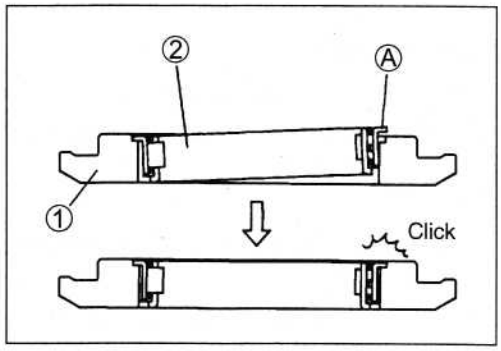

- Face the groove Ⓑ of the one way clutch guide to the generator rotor.

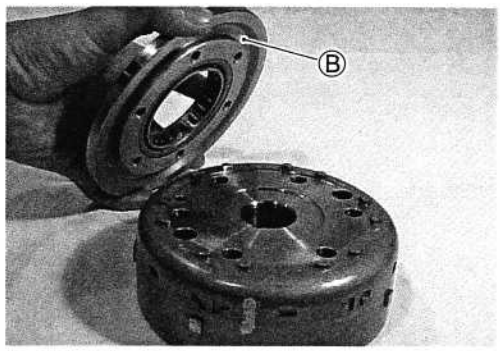

- Apply THREAD LOCK SUPER "1303" to the bolts and tighten them to the specified torque.

1303 99000-32030: THREAD LOCK SUPER "1303"

Starter clutch bolt: 25 N·m (2.5 kgf·m, 18.0 lb-ft)

- Apply engine oil to the one way clutch.

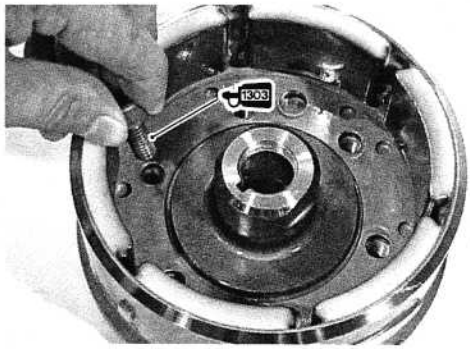

GENERATOR AND SIGNAL GENERATOR

INSPECTION

- Refer to the pages 7-10, 7-11 and 7-27 for generator and signal generator inspection.

REASSEMBLY

- When installing the generator starter set bolts ① and the signal generator set bolts ②, apply THREAD LOCK "1342" to their thread and tighten them to the specified torque.

1342 99000-32050: THREAD LOCK "1342"

Generator starter set bolt ①: 10 N·m (1.0 kgf·m, 7.0 lb-ft)
Signal generator set bolt ②: 5.5 N·m (0.55 kgf·m, 4.0 lb-ft)

NOTE:
Be sure to install the grommet to the generator cover.

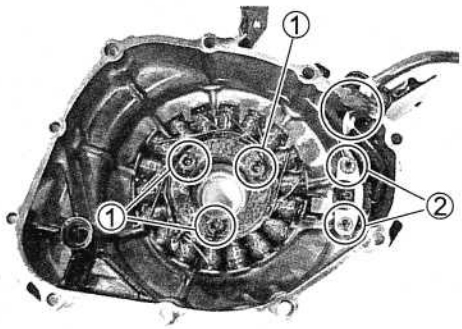

OIL PUMP

INSPECTION

- Rotate the oil pump by hand and check that it moves smoothly.
- If it does not move smoothly, replace the oil pump assembly.

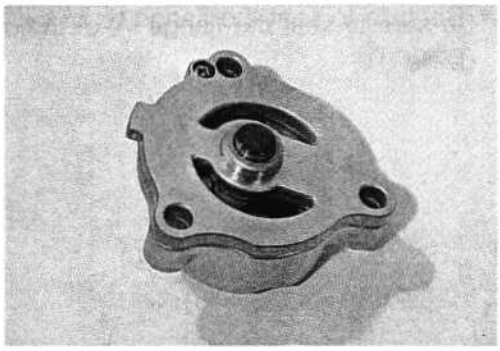

▲ CAUTION

- **Do not attempt to disassemble the oil pump assembly.**
- **The oil pump is available only as an assembly.**

ENGINE REASSEMBLY

- Reassemble the engine in the reverse order of disassembly.
- The following steps require special attention or precautionary measures should be taken.

NOTE:
Apply engine oil to each running and sliding part before reassembling.

- Be sure to install the following items to the crankcase.
  * Crankshaft journal bearing (☞ 3-61)
  * Crankcase bearing (☞ 3-68)
  * Bearing retainer (☞ 3-68)
  * Oil seal (☞ 3-68)
  * Oil pressure switch (☞ 3-70)
  * Oil pressure regulator (☞ 3-71)
  * Oil strainer (☞ 3-71)
  * Oil plate (☞ 3-72)
  * Oil jet (☞ 3-73)
  * Gearshift arm stopper (☞ 3-74)
  * Oil gallery plug (☞ 3-74)
  * Oil drain bolt (☞ 2-13)

TRANSMISSION

- Install the countershaft assembly ① and the driveshaft assembly ② to the left crankcase half.
- Install the washer ③ onto the driveshaft assembly ②.

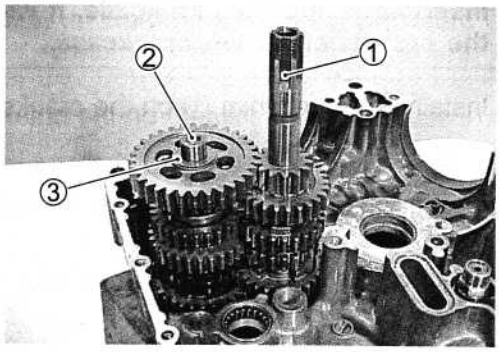

GEARSHIFT

- Install the gearshift fork (④, ⑤ and ⑥).

④ For 5th driven gear
⑤ For 6th driven gear
⑥ For 3rd/4th drive gear

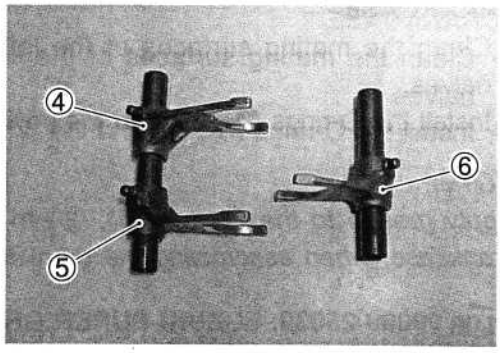

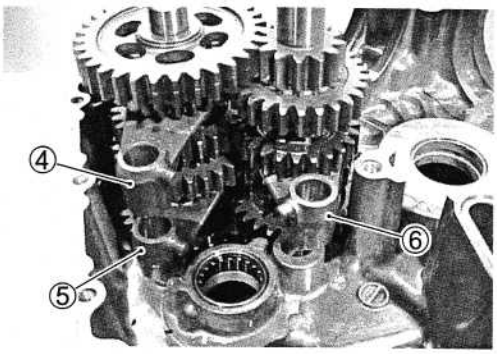

- Install the gearshift cam ① and the gearshift fork shafts ②.

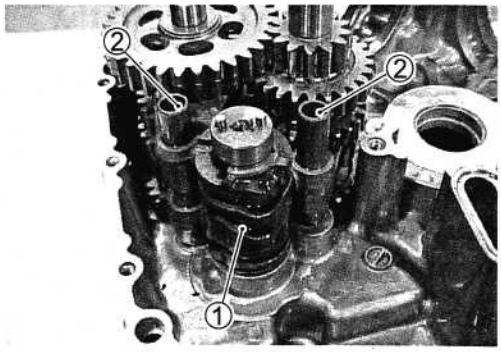

CRANKSHAFT

- Install the crankshaft into the left crankcase half.

NOTE:

* *Coat lightly engine oil and moly paste to the crankshaft journal bearings and the thrust shim.*
* *Refer to page 3-60 for the conrod installation.*

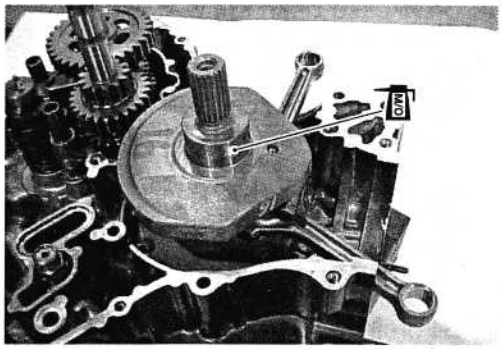

99000-25140: SUZUKI MOLY PASTE

⚠ CAUTION

Never strike the crankshaft with a plastic hammer when inserting it into the crankcase. It will be easy to install the crankshaft to left crankcase.

- Install the thrust shim ① on the crankshaft.

NOTE:

* *The grooved face Ⓐ of thrust shim ① faces to crankshaft web side.*
* *The thrust shim is selected according to the crankshaft thrust clearance. (☞ 3-67)*

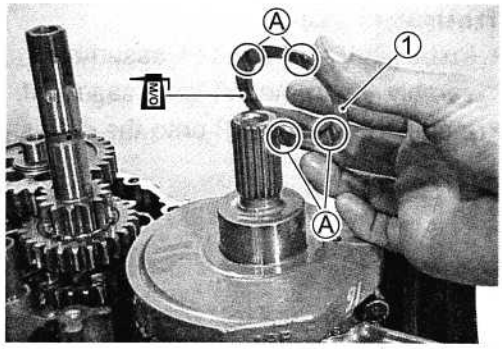

CRANKCASE

- Clean the mating surfaces of the left and right crankcase halves.
- Install the O-rings (①, ②) and the dowel pins ③.

NOTE:

Apply grease to the O-rings (①, ②) to prevent dropping into crankcase, when assembling the crankcase.

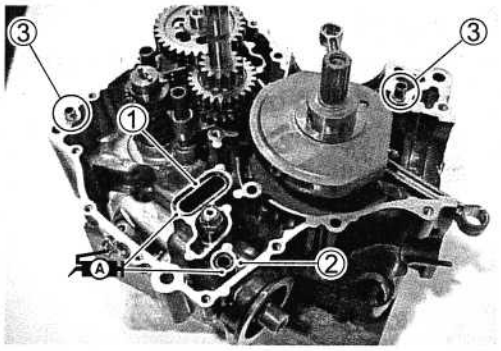

99000-25030: SUZUKI SUPER GREASE "A"

- Apply SUZUKI BOND "1207B" to the mating surface of the left crankcase.

1207B 99104-31140: SUZUKI BOND "1207B"

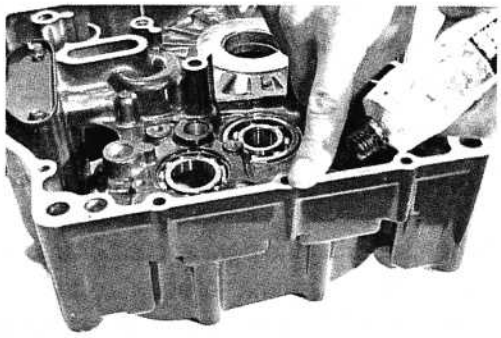

NOTE:
Use of SUZUKI BOND "1207B" is as follows:

* *Make surfaces free from moisture, oil, dust and other foreign materials.*
* *Spread on surfaces thinly to form an even layer, and assemble the crankcases within few minutes.*
* *Take extreme care not to apply any BOND "1207B" to the oil hole, oil groove and bearing.*
* *Apply to distorted surfaces as it forms a comparatively thick film.*

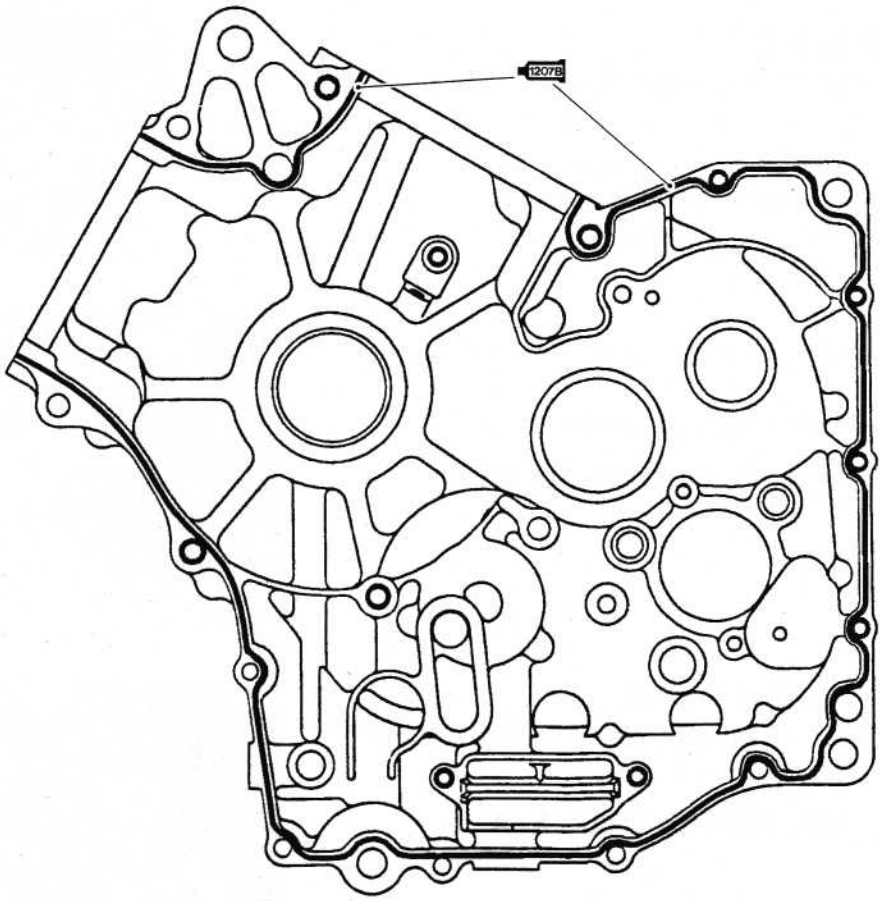

- When installing the oil plate ①, put the right crankcase rib Ⓐ between to the oil plate ends Ⓑ securely.

NOTE:
The oil plate ① has been inrtalled until the following engine.

Engine serial number : Until P503-102260
Until P505-100113

- When securing the right and left crankcase halves, tighten each bolt a little at a time to equalize the pressure. Tighten all the securing bolts to the specified torque values.

Crankcase bolt: (M8) 26 N·m (2.6 kgf·m, 19.0 lb-ft)
(M6) 11 N·m (1.1 kgf·m, 8.0 lb-ft)

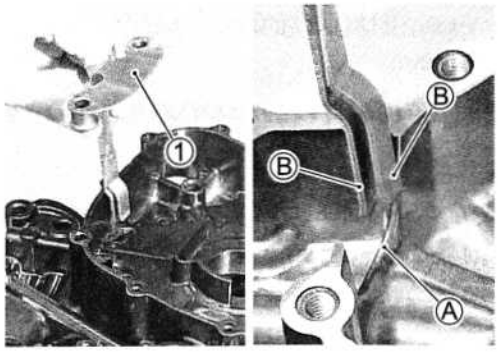

⚠ CAUTION

Do not drop the O-ring into the crankcase when assembling the right and left crankcase halves.

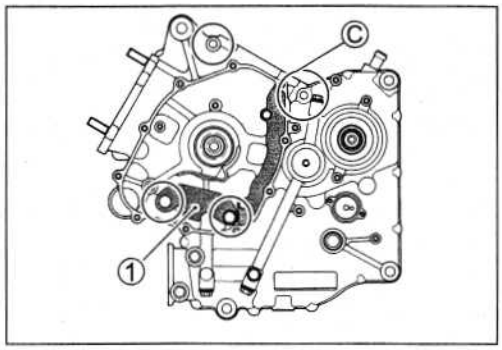

NOTE:
* *After the crankcase bolts have been tightened, check if the crankshaft, the driveshaft and the countershaft rotate smoothly.*
* *Fit the clamp to the bolt Ⓒ as shown.*
* *Fit the plating bolt Ⓓ as shown.*

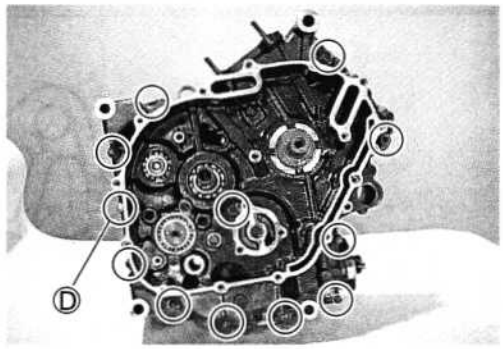

ENGINE SPROCKET SPACER

- Install the new O-ring into the engine sprocket spacer ①.

⚠ CAUTION

Use the new O-ring to prevent oil leakage.

- Install the engine sprocket spacer ①.

NOTE:
* *The grooved Ⓐ side of the engine sprocket spacer ① faces crankcase side.*
* *Apply grease to the oil seal lip and O-ring.*

99000-25030: SUZUKI SUPER GREASE "A"

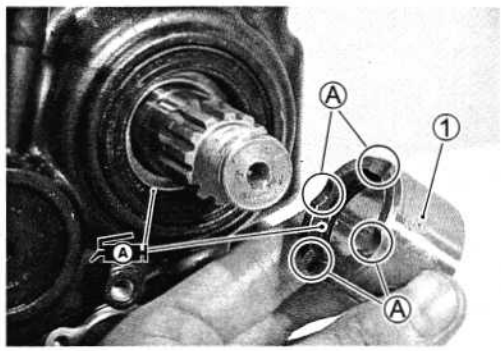

NEUTRAL INDICATOR LIGHT SWITCH

- Install the gear position switch contacts ① and the springs ②.
- Install the O-ring and apply grease to it.

99000-25030: SUZUKI SUPER GREASE "A"

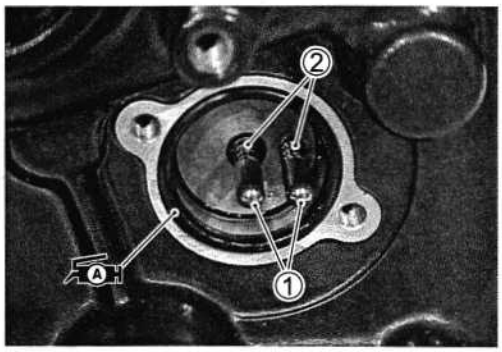

- Install the neutral indicator light switch as shown.

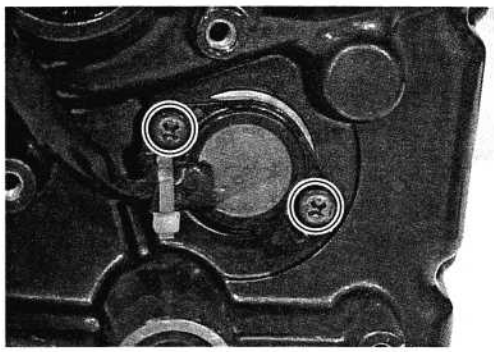

- Install the drive shaft oil seal retainer.

NOTE:
Pass through the neutral indicator light lead wire under the driveshaft oil seal retainer.

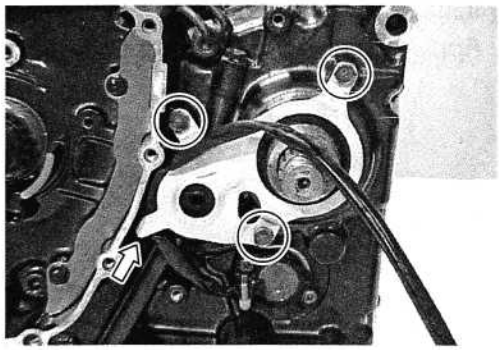

NO.1 (FRONT) CAM CHAIN

- Install the No.1 (Front) cam chain.

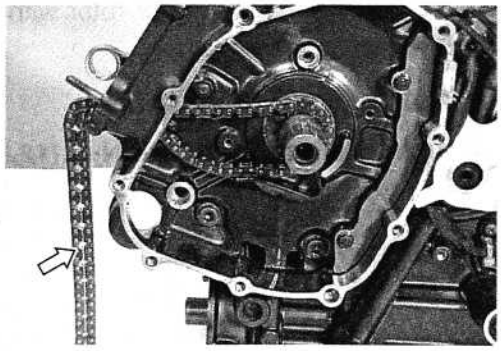

- Install the cam chain tensioner ①.

② Cam chain tensioner bolt
③ Washer

- Tighten the cam chain tensioner bolt ② to the specified torque.

Cam chain tensioner bolt: 10 N·m (1.0 kgf·m, 7.0 lb-ft)

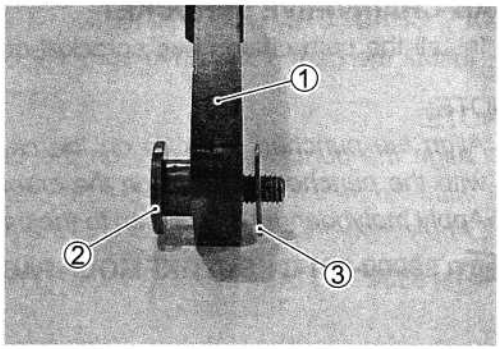

NOTE:
The front and rear cam chain tensioners are the same.

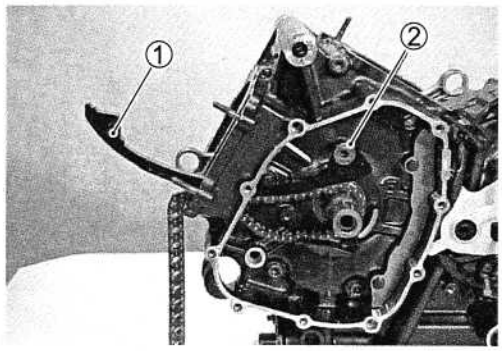

GENERATOR ROTOR

- Degrease the tapered portion Ⓐ of the generator rotor assembly and also the crankshaft. Use nonflammable cleaning solvent to wipe off oily or greasy matter and make these surfaces completely dry.
- Install the starter driven gear ①.
- Fit the key ② in the key slot on the crankshaft completely.

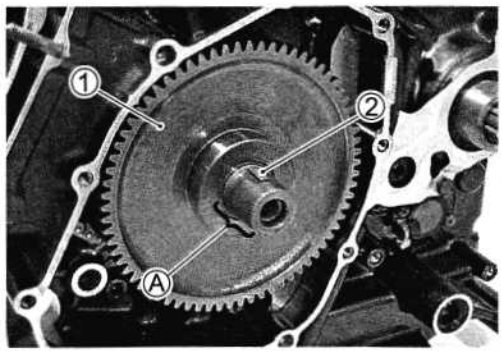

- Install the generator rotor assembly onto the crankshaft.
- Apply engine oil to the rotor bolt and install it with the washer.

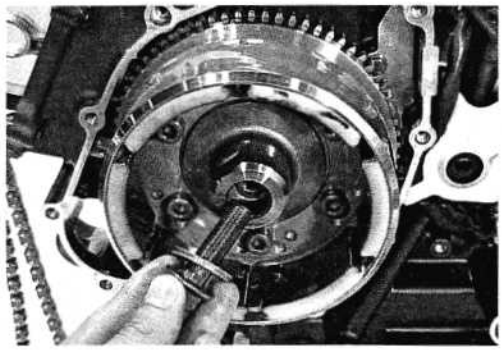

- While holding the generator rotor with special tool, tighten its bolt to the specified torque.

TOOL 09930-44530: Rotor holder

Generator rotor bolt: 120 N·m (12.0 kgf·m, 87 lb-ft)

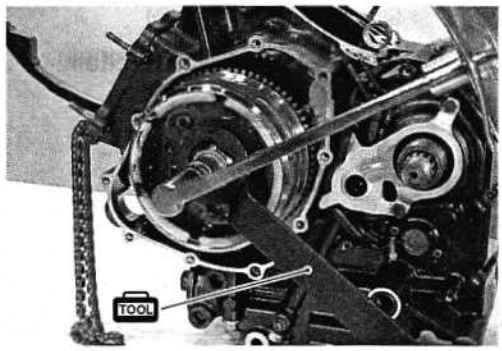

CAM CHAIN DRIVE SPROCKET

- Install the cam chain drive sprocket onto the crankshaft.

NOTE:

* *Align the punched mark Ⓐ on the cam chain drive sprocket with the punched mark Ⓑ on the crankshaft.*

* *Apply molybdenum oil solution to the cam chain drive sprocket.*

M H 99000-25140: SUZUKI MOLY PASTE

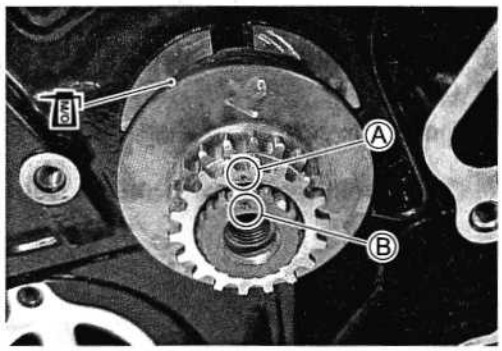

NO.2 (REAR) CAM CHAIN

- Install the No.2 (Rear) cam chain.

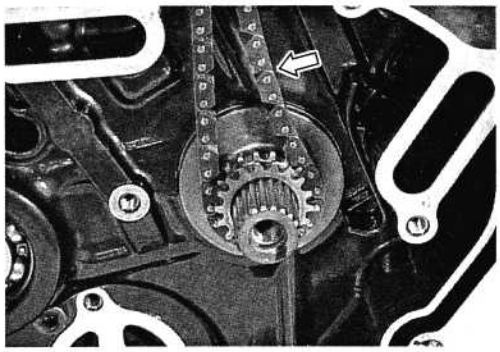

- Install the cam chain tensioner ①.

② Cam chain tensioner bolt

③ Washer

- Tighten the cam chain tensioner bolt ② to the specified torque.

Cam chain tensioner bolt: 10 N·m (1.0 kgf·m, 7.0 lb-ft)

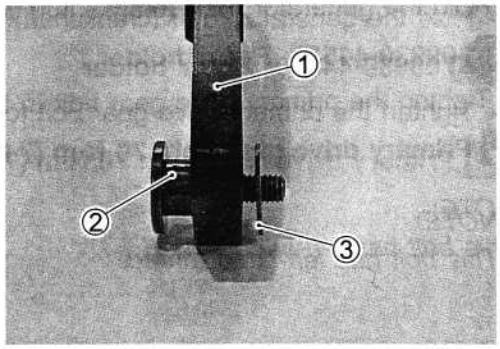

NOTE:

The front and rear cam chain tensioners are the same.

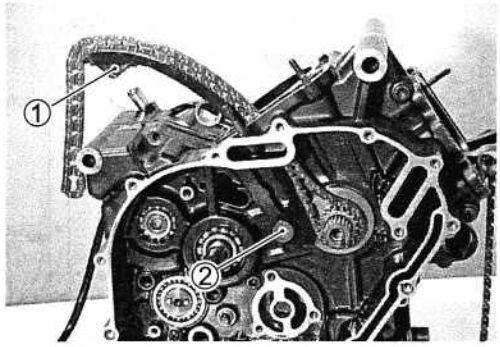

PRIMARY DRIVE GEAR

- Install the primary drive gear ①.

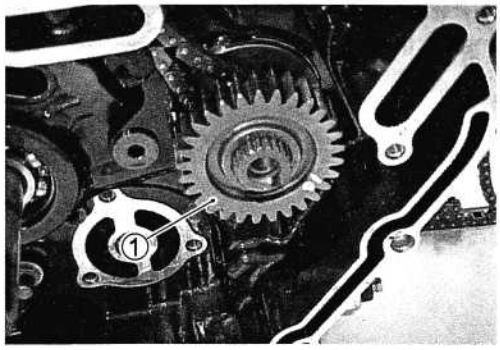

- Install the water pump drive gear ①.

NOTE:
The chamfer side Ⓐ of the water pump drive gear ① faces out.

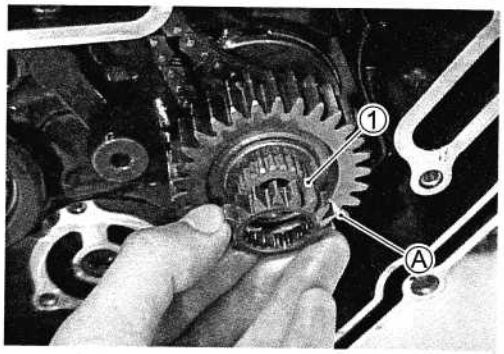

- Hold the generator rotor (crankshaft) with the special tool.

TOOL 09930-44530: Rotor holder

- Tighten the primary drive gear bolt to the specified torque.

Primary drive gear bolt: 70 N·m (7.0 kgf·m, 50.5 lb-ft)

NOTE:
This bolt has left-hand thread.

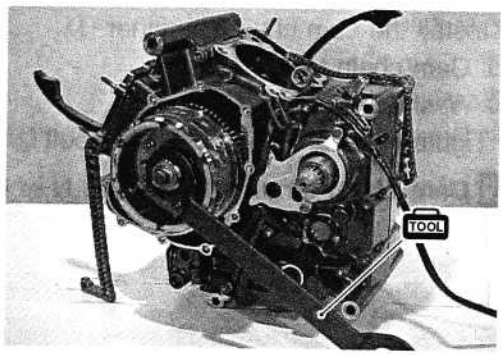

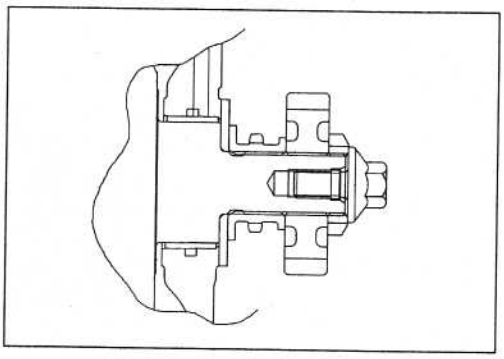

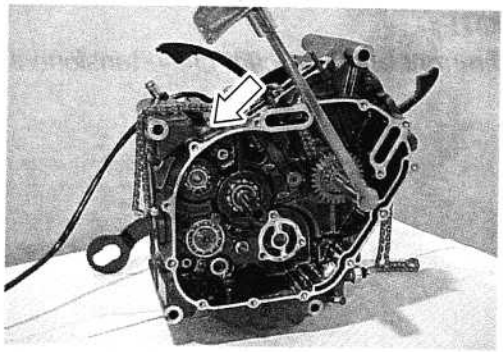

OIL PIPE

- Install the oil pipe.

NOTE:
Align the projection Ⓐ of the oil pipe with the groove Ⓑ of its stopper.

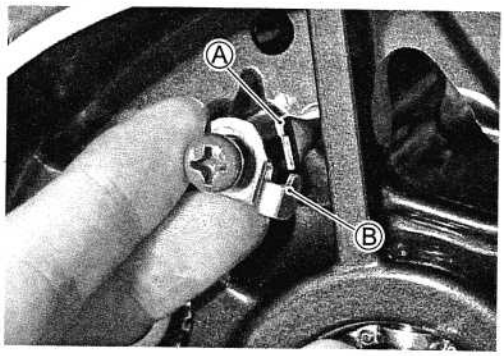

- Tighten the oil pipe stopper screw to the specified torque.

Oil pipe stopper screw: 8 N·m (0.8 kgf·m, 6.0 lb-ft)

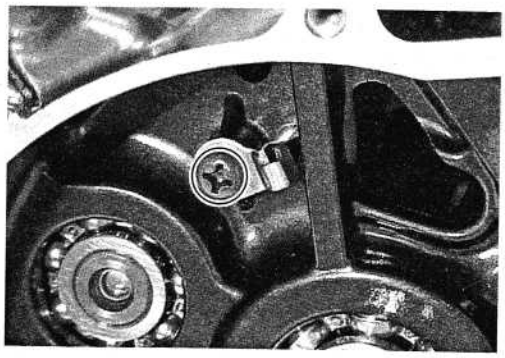

GEARSHIFT SYSTEM

- Install the gearshift cam stopper ①, its bolt ②, the washer ③ and the return spring ④.

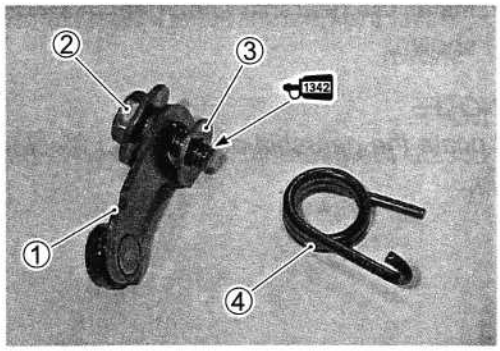

NOTE:
Apply a small quantity of THREAD LOCK "1342" to the gearshift cam stopper bolt ③ and tighten it to the specified torque.

1342 99000-32050: THREAD LOCK "1342"

Gearshift cam stopper bolt: 10 N·m (1.0 kgf·m, 7.0 lb-ft)

NOTE:
Hook the return spring end to the stopper ①.

- Confirm the gearshift cam stopper movement.
- Check the neutral position.

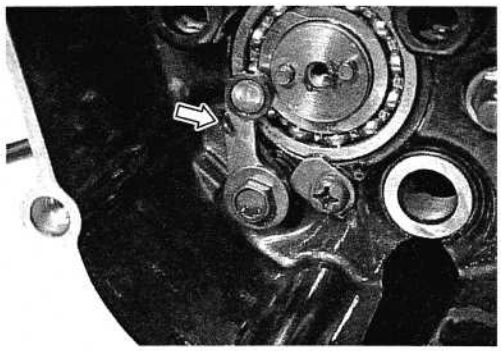

- Install the gearshift cam stopper plate after aligning the gearshift cam pins Ⓐ with the gearshift cam stopper plate holes Ⓑ.

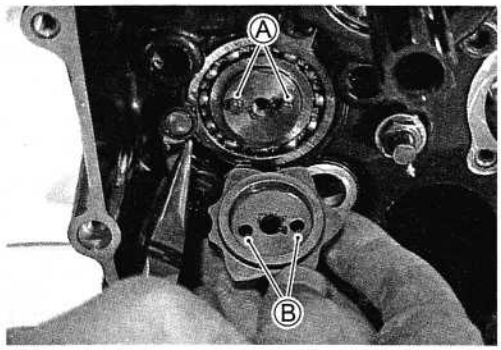

- Apply a small quantity of THREAD LOCK "1342" to the gearshift cam stopper plate bolt and tighten it to the specified torque.

1342 99000-32050: THREAD LOCK "1342"

Gearshift cam stopper plate bolt: 10 N·m (1.0 kgf·m, 7.0 lb-ft)

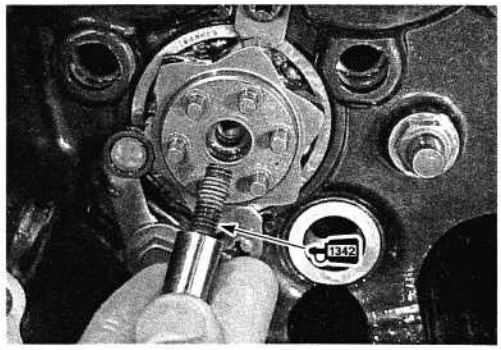

- Install the gearshift shaft/gearshift arm ① with the washers as shown.

NOTE:
Locate the gearshift arm stopper ② between return spring ends Ⓐ.

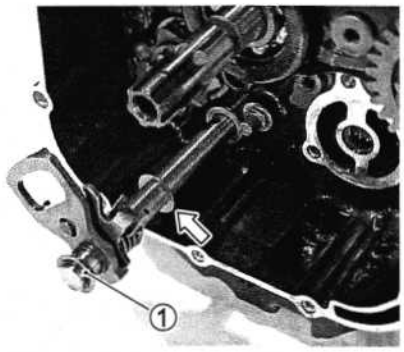

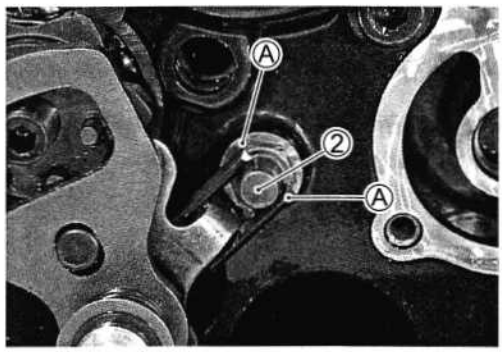

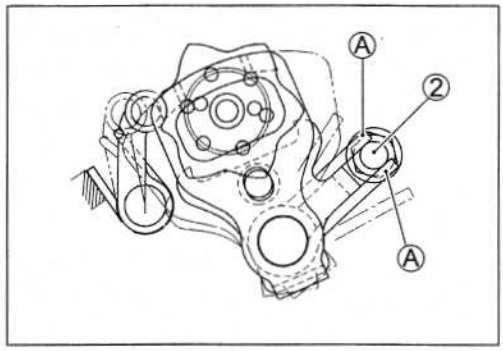

- Install the washer ③ and the circlip ④.

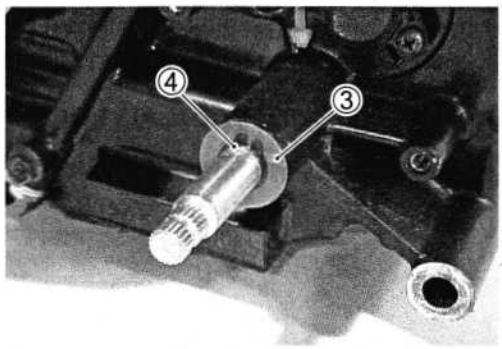

OIL PUMP

- Install the oil pump with the three screws and then tighten them to the specified torque.

NOTE:

Apply a small quantity of THREAD LOCK "1342" to the screws.

1342 99000-32050: THREAD LOCK "1342"

Oil pump mounting screws: 8 N·m (0.8 kgf·m, 6.0 lb-ft)

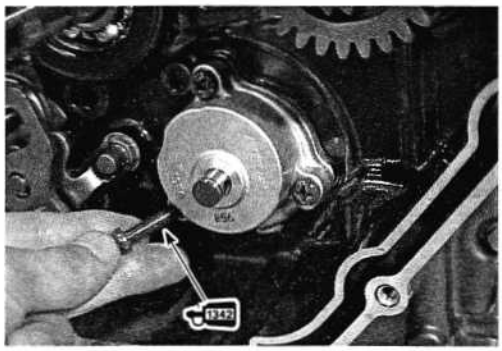

- Install the washer ① and the pin ②.

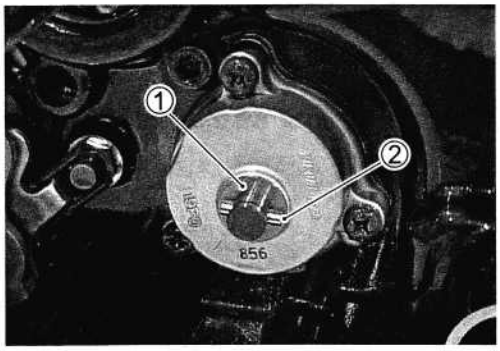

- Install the oil pump driven gear ③.
- Install the circlip.

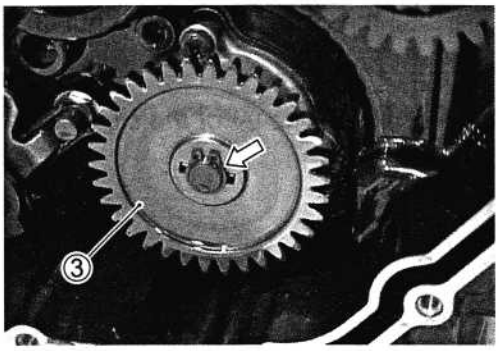

CLUTCH

- Install the washer ① and spacer ② and apply engine oil to them.

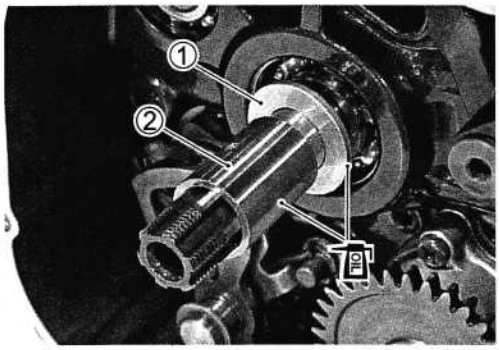

- Install the primary driven gear assembly ③ onto the countershaft.

NOTE:
Be sure to engage the oil pump drive and driven gears, primary drive and driven gears.

- Install the thrust washer ④.

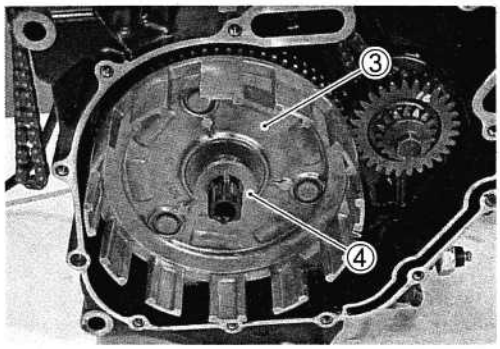

- Install the clutch sleeve hub ① and lock washer ②.

NOTE
Replace the lock washer ② with a new one.

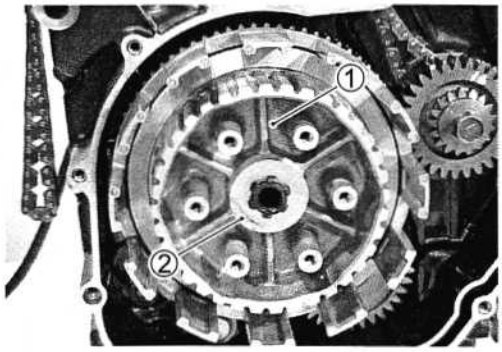

- Install the clutch sleeve hub nut ③.

NOTE
The chamfer side Ⓐ of the clutch sleeve hub nut faces out.

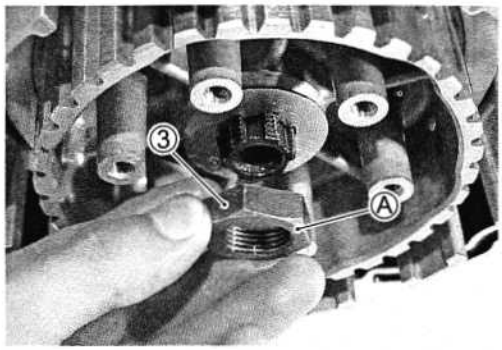

- Hold the clutch sleeve hub using the special tool.

TOOL 09920-53740: Clutch sleeve hub holder

- Tighten the clutch sleeve hub nut to the specified torque.

Clutch sleeve hub nut: 50 N·m (5.0 kgf·m, 36 lb-ft)

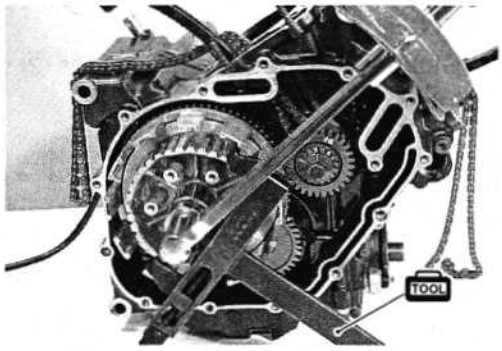

- Bend the lock washer to lock the nut.

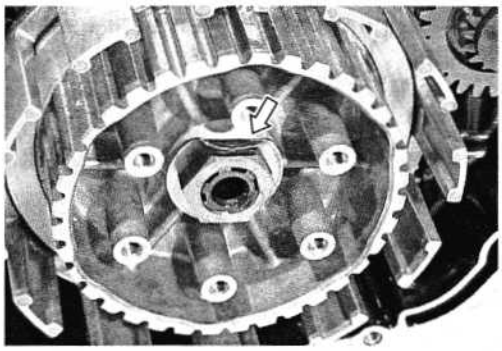

- Insert the clutch drive plates ①, ② and driven plates ③ one by one into the clutch sleeve hub in the prescribed order, No.2 drive plate ① being inserted first.

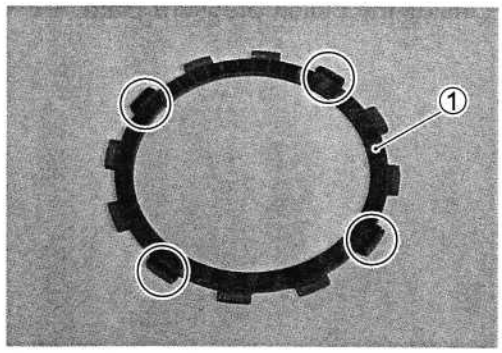

① No.2 Clutch drive plate (installed the dampers)
② No.1 clutch drive plate
③ Clutch driven plate (thickness: 1.6 mm)

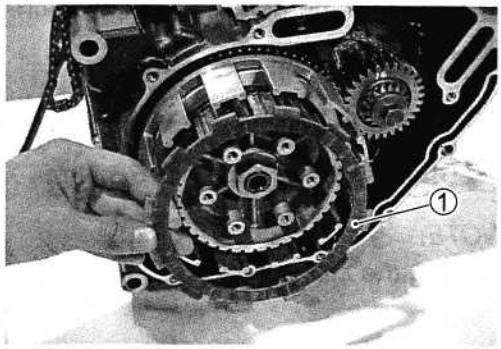

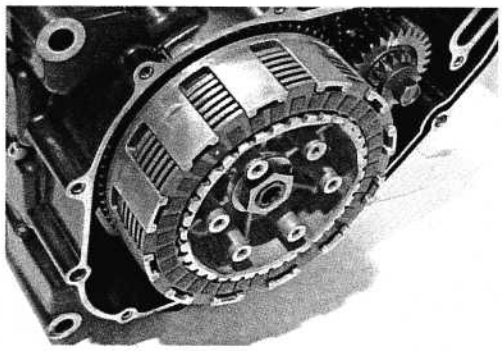

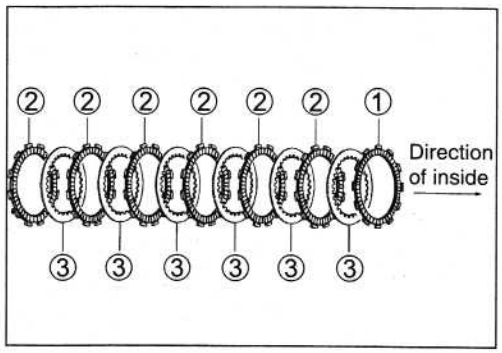

- Install the clutch push rod ④ into the countershaft.

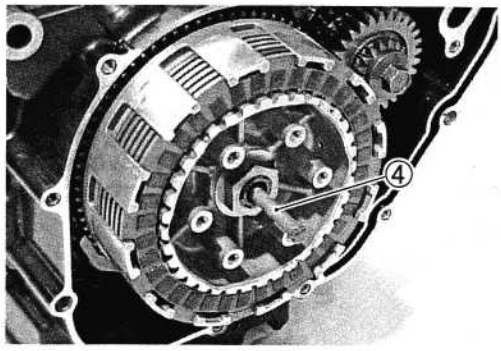

- Install the clutch push piece ⑤, the bearing ⑥ and the thrust washer ⑦ to the countershaft.

NOTE:
Thrust washer ⑦ is located between the pressure plate and the bearing ⑥.

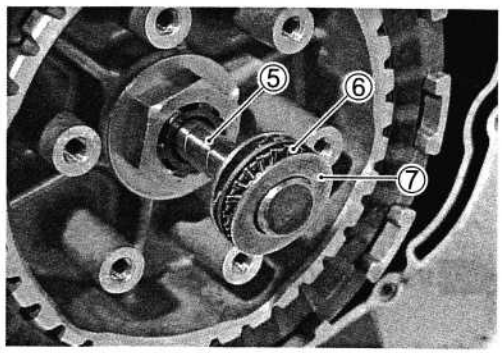

- Install the clutch pressure plate.

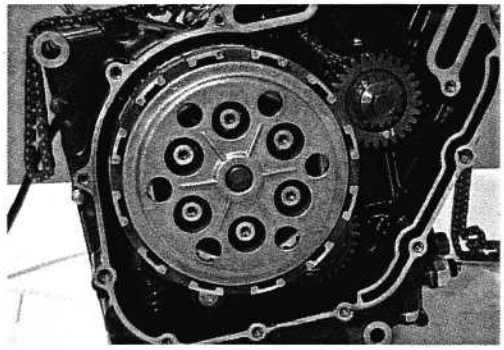

- Hold the generator rotor (crankshaft) using the special tool.

TOOL 09930-44530: Rotor holder

- Tighten the clutch spring set bolts to the specified torque.

Clutch spring set bolt: 5.5 N·m (0.55 kgf·m, 4.0 lb-ft)

NOTE:
Tighten the clutch spring set bolt diagonally.

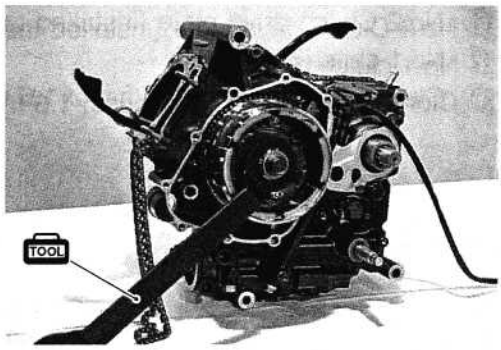

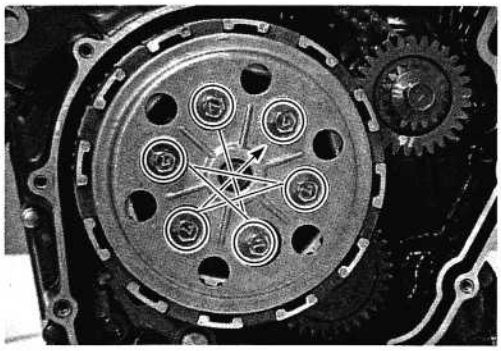

CLUTCH COVER

- Install the gasket ① and the dowel pins ②.

CAUTION

Use the new gasket to prevent oil leakage.

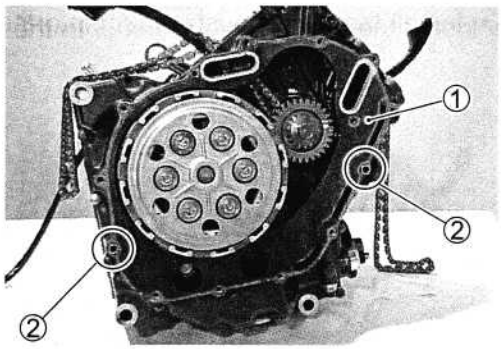

- Install the clutch inner cover ③ and tighten its bolts temporarily.

NOTE:
* *Be sure to install the water pump and its driven gear. (☞ 5-19)*
* *Apply THREAD LOCK "1342" to the clutch cover bolts.*

1342 99000-32050: THREAD LOCK "1342"

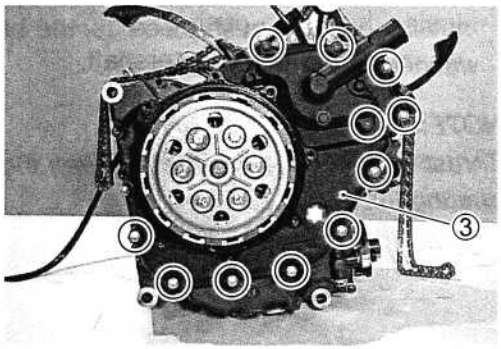

- Install the new O-ring onto the clutch outer cover.

⚠ CAUTION

Use the new O-ring to prevent oil leakage.

- Apply grease to the O-ring.

99000-25030: SUZUKI SUPER GREASE "A"

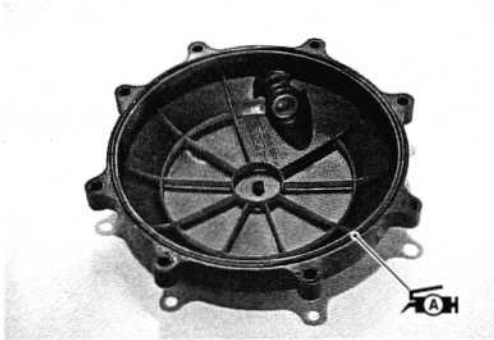

- Make sure that the spacer is installed on the clutch outer cover ①.

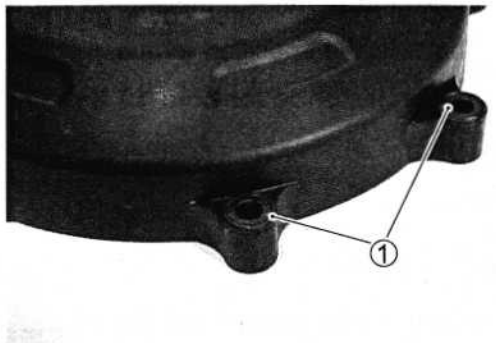

- Install the clutch outer cover and tighten its bolts temporarily.

NOTE:
** Fit the clamp to the bolt Ⓐ as shown.*
** Apply THREAD LOCK "1342" to the clutch cover bolts.*

99000-32050: THREAD LOCK "1342"

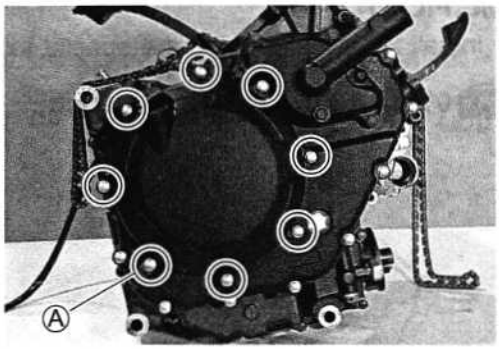

- Tighten the clutch outer and inner cover bolts to the specified torque.

Clutch cover bolt: 10 N·m (1.0 kgf·m, 7.0 lb-ft)

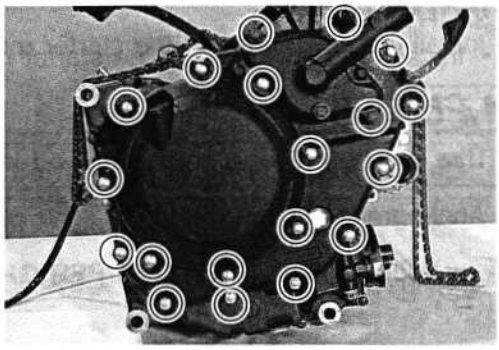

GENERATOR COVER

- Install the starter idle gear ① and the shaft ②.

NOTE:
Apply engine oil and the SUZUKI MOLY PASTE to the shaft ②.

99000-25140: SUZUKI MOLY PASTE

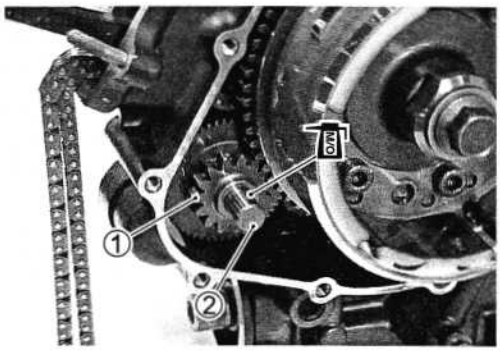

- Install the dowel pins ② and the gasket ①.

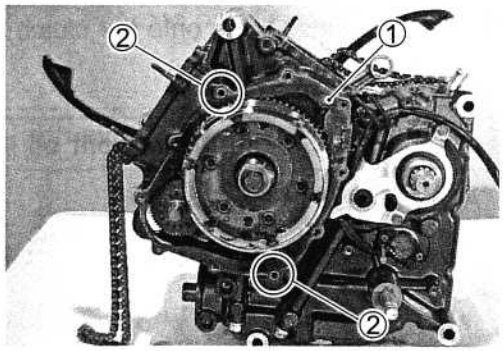

⚠ CAUTION

Use the new gasket to prevent oil leakage.

- Install the generator cover and tighten the generator cover bolts to the specified torque.

Generator cover bolt: 10 N·m (1.0 kgf·m, 7.0 lb-ft)

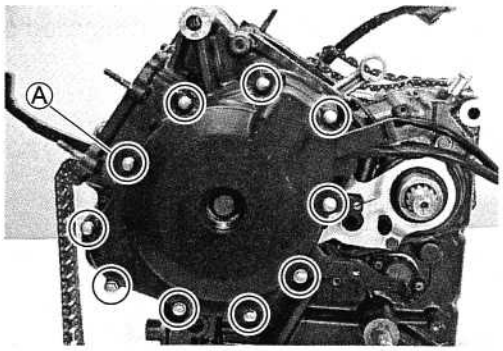

NOTE:
Fit the gasket washer to the generator cover bolt Ⓐ correctly as shown.

⚠ CAUTION

Use the new gasket washer to prevent oil leakage.

OIL FILTER

- Install the oil filter using the special tool.(☞ 2-14)

TOOL 09915-40610: Oil filter wrench

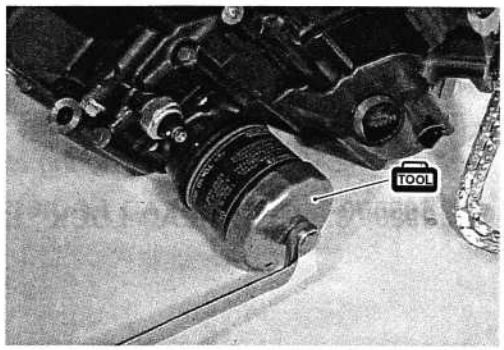

STARTER MOTOR

- Install the new O-ring to the starter motor.

⚠ CAUTION

Use the new O-ring to prevent oil leakage.

- Apply grease to the O-ring.

99000-25030: SUZUKI SUPER GREASE "A"

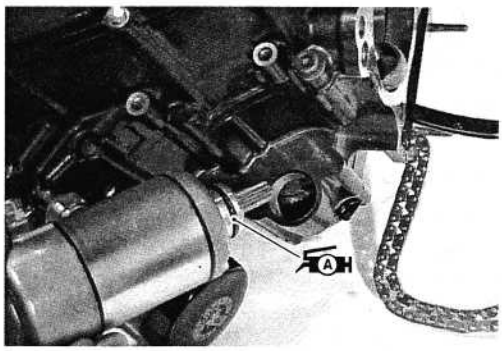

- Install the starter motor.
- Tighten the starter motor mounting bolts with the clamp ① securely.

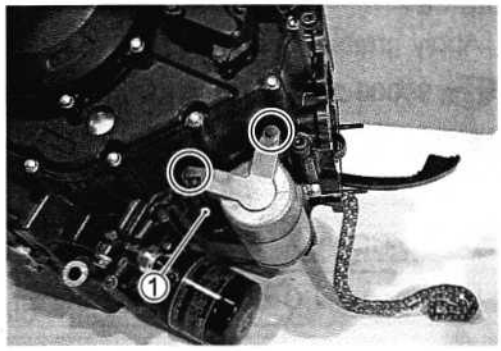

PISTON

- Position the gaps of the three rings as shown. Before inserting each piston into the cylinder, check that the gaps are so located. (☞ 3-56)

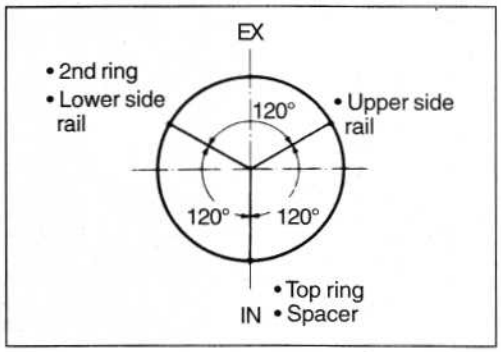

- Rub a small quantity of molybdenum oil solution onto each piston pin.

99000-25140: SUZUKI MOLY PASTE

NOTE:
When installing the pistons, front and rear, the indents Ⓐ on the piston heads must be located to each exhaust side.

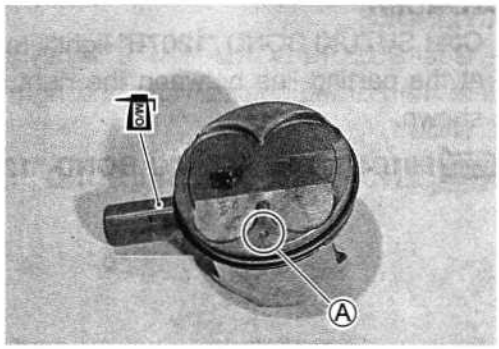

- Place a clean rag over the cylinder base so as not to drop the piston pin circlips into the crankcase.
- Install the pistons ②, front and rear.
- Install the piston pin circlips ①.

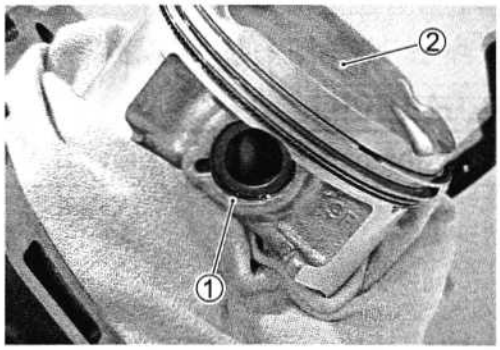

▲ CAUTION

Use new piston pin circlips to prevent circlip failure which will occur with a bend one.

NOTE:
End gap of the circlip should not be aligned with the cutaway in the piston pin bore.

▲ CAUTION

When turning the crankshaft, pull the cam chains upward, or the chains will be caught between the crankcase and the cam drive sprocket.

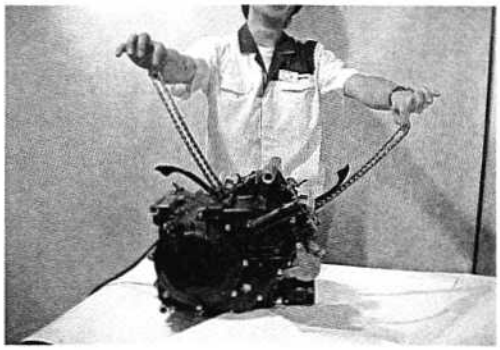

OIL JET

- Apply grease to the new O-rings.

99000-25030: SUZUKI SUPER GREASE "A"

- Install each of the oil jets (#14) ①, ②, as shown in the photograph.

⚠ CAUTION

Use the new O-rings to prevent oil leakage.

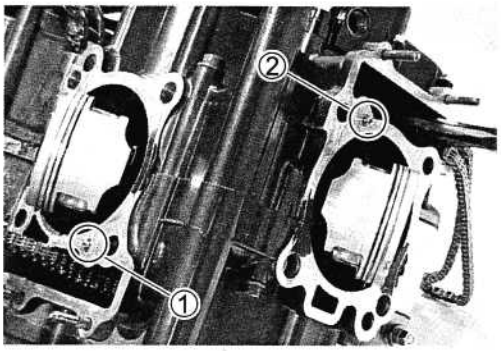

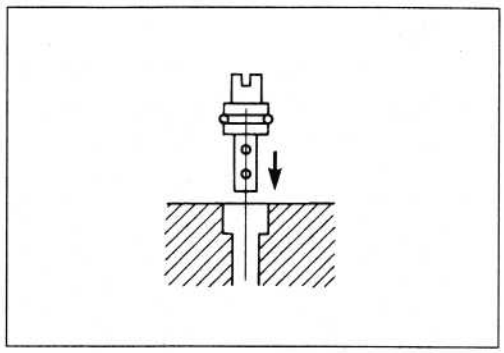

CYLINDER

- Coat SUZUKI BOND "1207B" lightly to the mating surfaces Ⓐ at the parting line between the right and left crankcases as shown.

99104-31140: SUZUKI BOND "1207B"

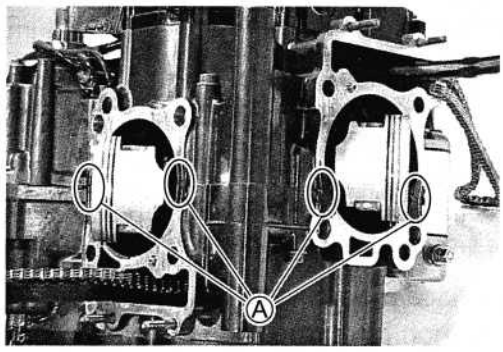

- Apply engine oil to the sliding surface of the pistons.
- Fit the dowel pins ① and new gaskets ② to the crankcase.

⚠ CAUTION

Use the new gaskets to prevent oil leakage.

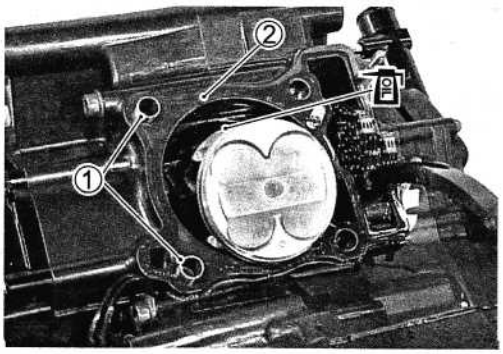

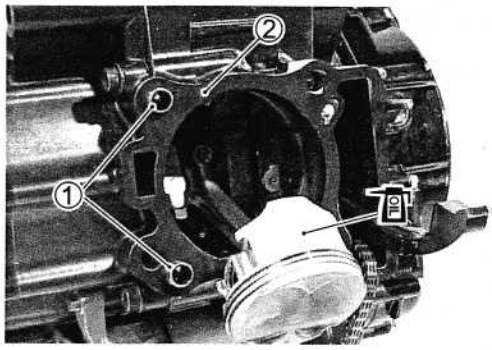

- Apply engine oil to the sliding surface of the cylinders.

NOTE:
The front and rear cylinders can be distinguished by the embossed-letters Ⓐ.
"FRONT": Front (No.1) cylinder
"REAR": Rear (No.2) cylinder

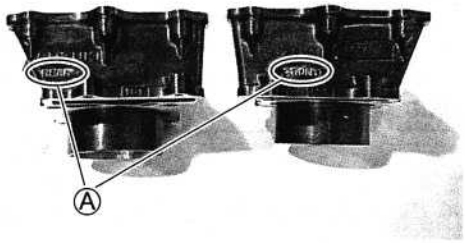

- Hold the piston rings in proper position, and insert each of the pistons into the respective cylinders.

NOTE:
When installing the cylinders, keep the cam chains taut. The cam chain must not be caught between cam drive sprocket and crankcase when turning the crankshaft.

- Tighten the cylinder nuts (M6) temporarily.

NOTE:
Fit the clamp to the front cylinder nut Ⓐ as shown.

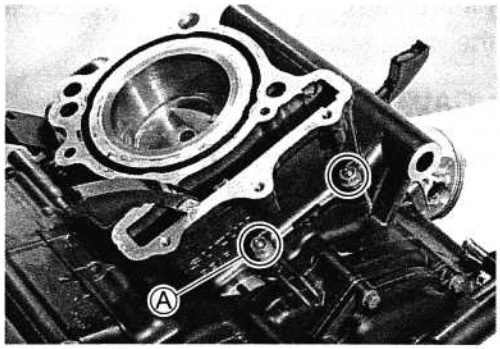

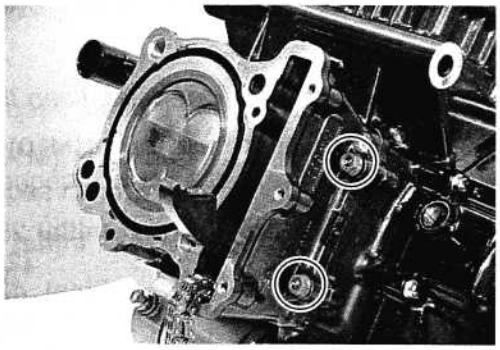

NO.2 (REAR) CYLINDER HEAD

- The cylinder heads can be distinguished by the embossed-letters, "F" and "R".
  "F" No.1 (Front) cylinder head
  "R" No.2 (Rear) cylinder head

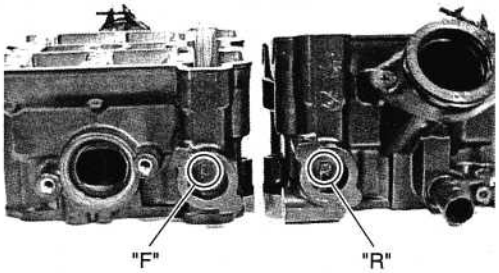

- Pull the cam chain out of the cylinder and install the cam chain guide ①.

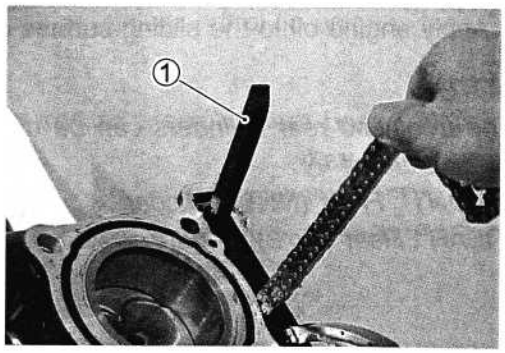

▲ CAUTION

There is the guide holder for the bottom end of the cam chain guide ① cast in the crankcase. Be sure that the cam chain guide ① is inserted properly.

NOTE:
The front and rear cam chain guides are the same.

- Fit the dowel pins ② and the new cylinder head gasket ③ to the cylinders.

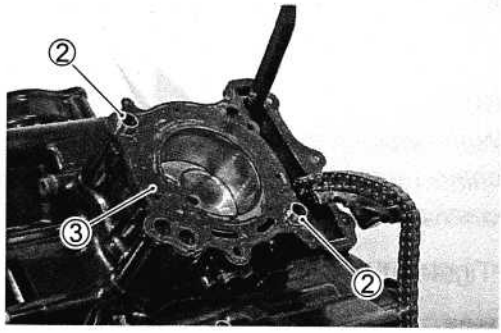

▲ CAUTION

Use the new gasket to prevent gas leakage.

- Place the rear cylinder head on the cylinder.

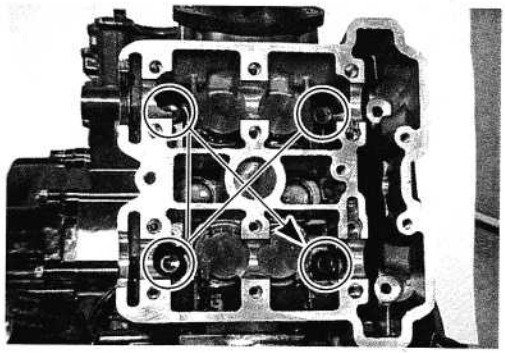

NOTE:
When installing the cylinder head, keep the cam chain taut.

- Tighten the cylinder head bolts (M10) to the specified two-step torque with a torque wrench sequentially and diagonally.

Cylinder head bolt (M10): Initial 25 N·m (2.5 kgf·m, 18.0 lb-ft)
Final 42 N·m (4.2 kgf·m, 30.5 lb-ft)

NOTE:
* *Install the washers to the cylinder head bolts (M10) as shown.*
* *Apply engine oil to the washers and thread portion of the bolts before installing the cylinder head bolts.*

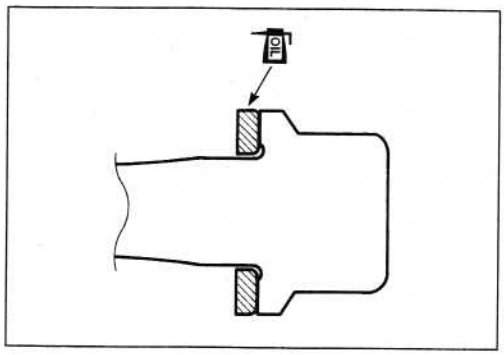

- After firmly tightening the cylinder head bolts (M10), install the cylinder head bolts (M6) ①, ②.
- Tighten the cylinder head bolts ①, ②, and the cylinder nuts ③.

Cylinder head bolt (M6): 10 N·m (1.0 kgf·m, 7.0 lb-ft)
Cylinder nut (M6): 10 N·m (1.0 kgf·m, 7.0 lb-ft)

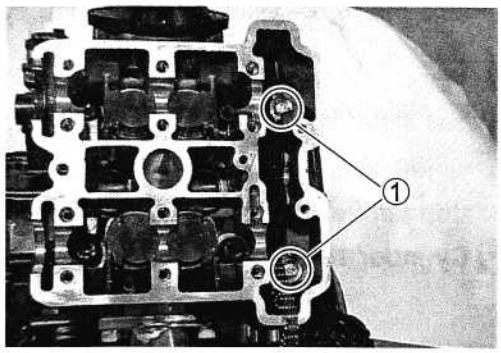

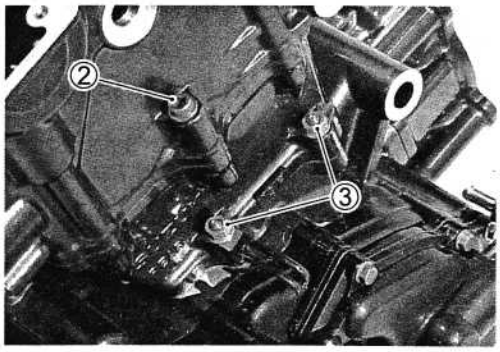

- Install the cylinder head side bolt ④ and gasket ⑤ and tighten it to the specified torque.

Cylinder head side bolt ④: 14 N·m (1.4 kgf·m, 10.0 lb-ft)

NOTE:
** The metal side Ⓐ of the gasket ⑤ faces out.*
** Install the cylinder head side bolt inside of the cam chain.*

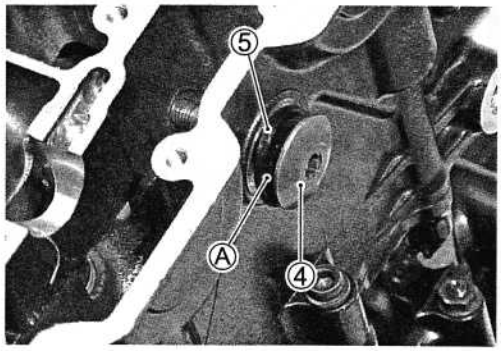

NO.1 (FRONT) CYLINDER HEAD

- Pull the cam chain out of the cylinder and install the cam chain guide ①.

▲ CAUTION

> *** There is the guide holder for the bottom end of the cam chain guide ① cast in the crankcase.**
> *** Be sure that the cam chain guide ① is installed properly.**

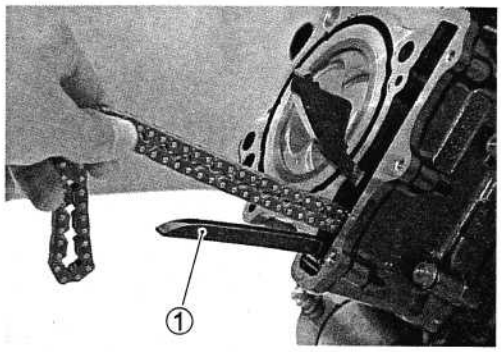

NOTE:
The front and rear cam chain guides are the same.

- Fit the dowel pins ② and the new cylinder head gasket ③ to the cylinder.

▲ CAUTION

> **Use the new gasket to prevent gas leakage.**

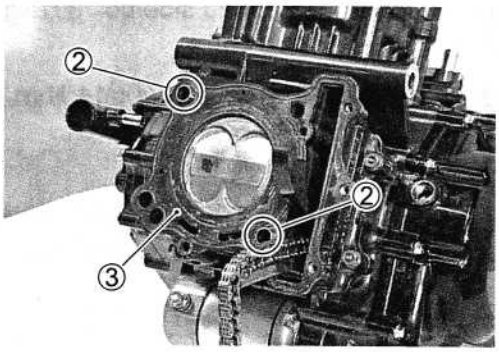

- Place the front cylinder head on the cylinder.

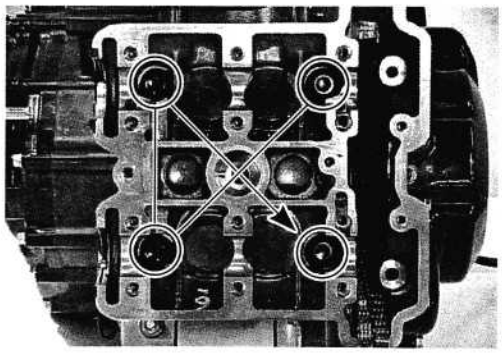

NOTE:
When installing the cylinder head, keep the cam chain taut.

- Tighten the cylinder head bolts (M10) to the specified two-step torque with a torque wrench sequentially and diagonally.

Cylinder head bolt (M10): Initial 25 N·m (2.5 kgf·m, 18.0 lb-ft)
Final 42 N·m (4.2 kgf·m, 30.5 lb-ft)

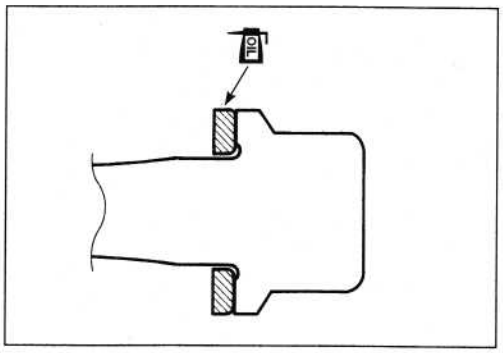

NOTE:
* *Install the washers to the cylinder head bolts (M10) as shown.*
* *Apply engine oil to the washers and thread portion of the bolts before installing the cylinder head bolts.*

- After firmly tightening the cylinder head bolts (M10), install the cylinder head bolts (M6) ①, ②.
- Tighten the cylinder head bolts ①, ② and the cylinder nuts ③.

Cylinder head bolt (M6): 10 N·m (1.0 kgf·m, 7.0 lb-ft)
Cylinder nut (M6): 10 N·m (1.0 kgf·m, 7.0 lb-ft)

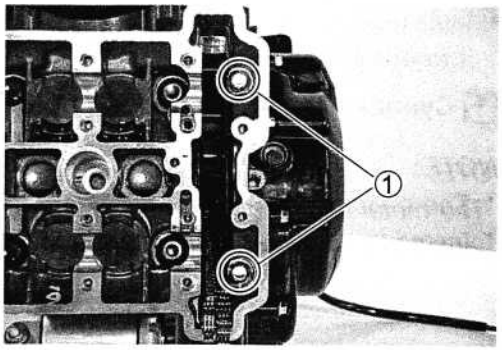

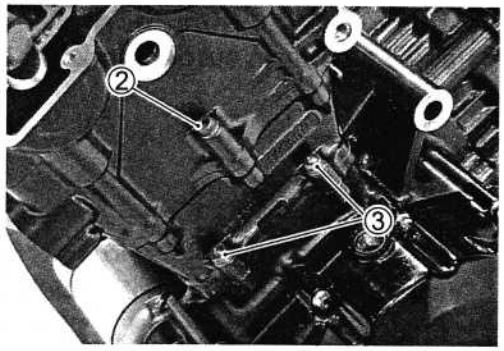

- Install the cylinder head side bolt ④ and gasket ⑤ and tighten it to the specified torque.

Cylinder head side bolt ④: 14 N·m (1.4 kgf·m, 10.0 lb-ft)

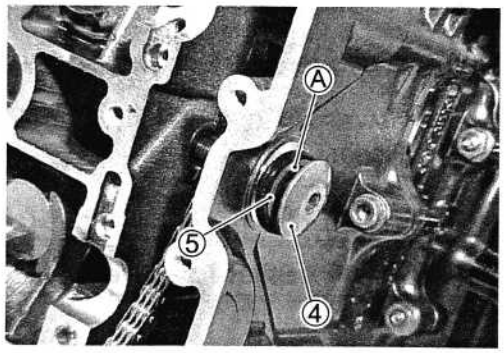

NOTE:
* *The metal side Ⓐ of the gasket ⑤ faces out.*
* *Install the cylinder head side bolt inside of the cam chain.*

CAM TIMING

- The cam shafts are identified by the enbossed letters.

  INF No.1 (Front) intake camshaft
  EXF No.1 (Front) exhaust camshaft
  INR No.2 (Rear) intake camshaft
  EXR No.2 (Rear) exhaust camshaft

- Before placing the camshafts on cylinder head, apply SUZUKI MOLY PASTE to their journals.
- Apply engine oil to the camshaft journal holders.

99000-25140: SUZUKI MOLY PASTE

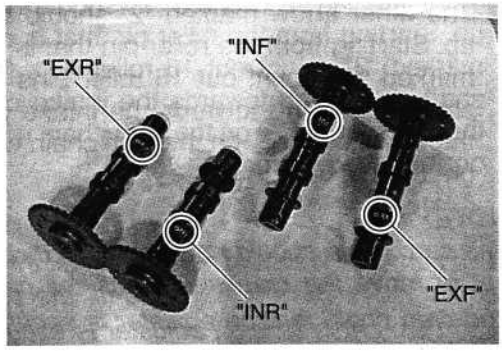

NO.1 Front Camshaft

- Turn the crankshaft counterclockwise with the box wrench and align "| F" line Ⓑ on the generator rotor with the index mark Ⓐ of the valve timing inspection hole while keeping the cam chains pulled upward.

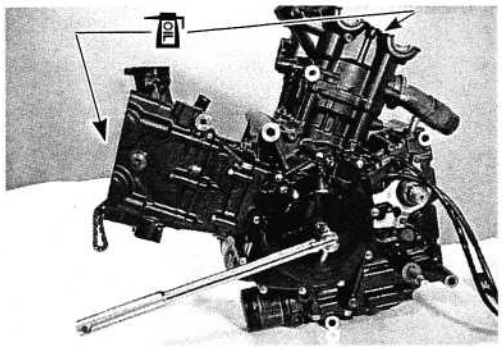

⚠ CAUTION

Pull the cam chains upward, or the chain will be caught between crankcase and cam drive sprocket.

⚠ CAUTION

To adjust the camshaft timing correctly, be sure to align "| F" line Ⓑ with the index mark Ⓐ and hold this position when installing the camshafts.

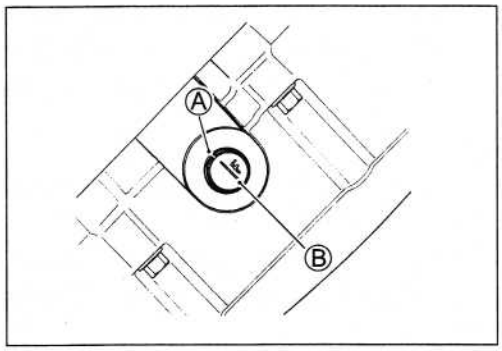

- Pull the cam chain lightly.
- The exhaust camshaft sprocket has an arrow marked "1" Ⓒ. Turn the exhaust camshaft so that the arrow is aligned with the gasket surface of the cylinder head.
- Engage the cam chain with the exhaust camshaft sprocket.

NOTE:
Before installing the camshaft, check that the tappets are installed correctly.

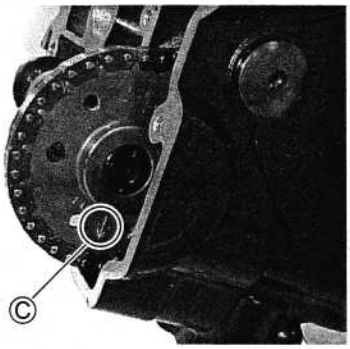

- The other arrow marked "2" should now be pointing straight up. Starting from the roller pin that is directly above the arrow marked "2", count out 16 roller pins (from the exhaust camshaft side going towards the intake camshaft side). Engage the 16 roller pin Ⓐ on the cam chain with the arrow marked "3" on the intake sprocket.

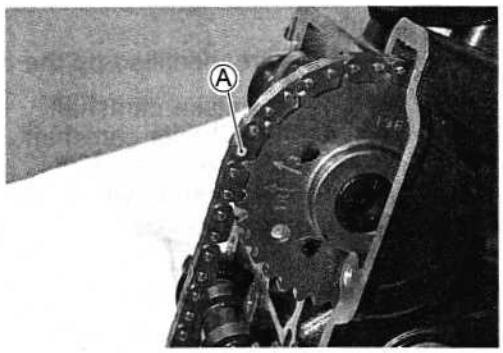

NOTE:
The cam chain should now be on all three sprockets. Be careful not to move the crankshaft until the camshaft journal holders and cam chain tension adjuster is secured.

- Install the dowel pins ①.

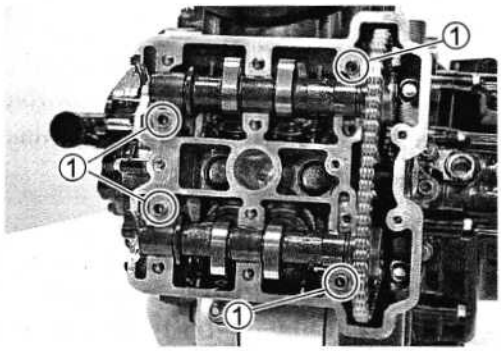

- Install the camshaft journal holders, intake and exhaust.
- Fasten the camshaft journal holders evenly by tightening the crankshaft journal holder bolts sequentially and diagonally.

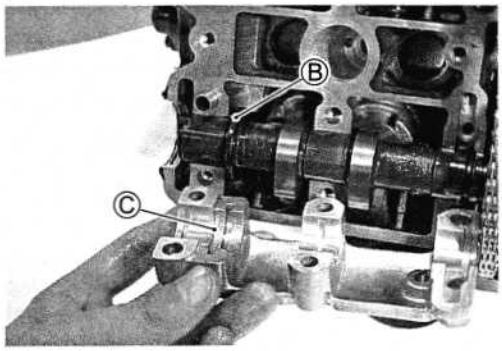

NOTE:
- *Align the flange Ⓑ of the camshafts with the groove Ⓒ of the camshaft journal holders.*
- *Damage to head or camshaft journal holder thrust surfaces may result if the camshaft journal holders are not drawn down evenly.*
- *Each camshaft journal holder is identified with a cast-on letters Ⓓ.*

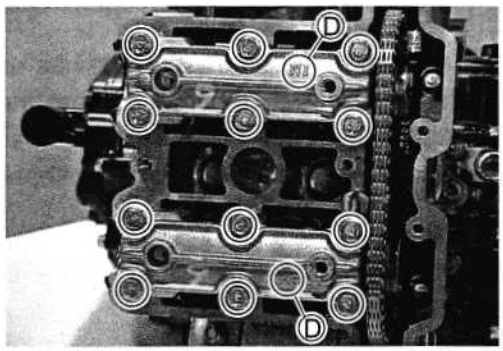

- Tighten the camshaft journal holder bolts to the specified torque.

Camshaft journal holder bolt: 10 N·m (1.0 kgf·m, 7.0 lb-ft)

⚠ CAUTION

The camshaft journal holder bolts are made of a special material and much superior in strength, compared with other types of high strength bolts.
Take special care not to use other types of bolts instead of these special bolts. To identify these bolts, each of them has a figure "9" on its head.

- Recheck the No.1 (Front) camshaft positions, intake and exhaust.

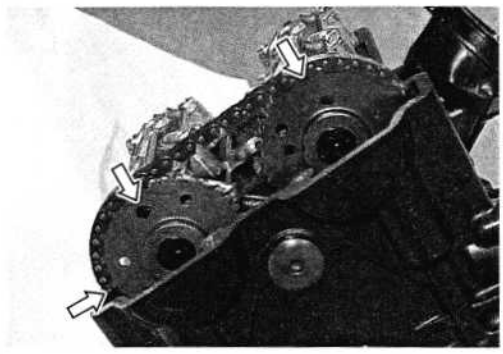

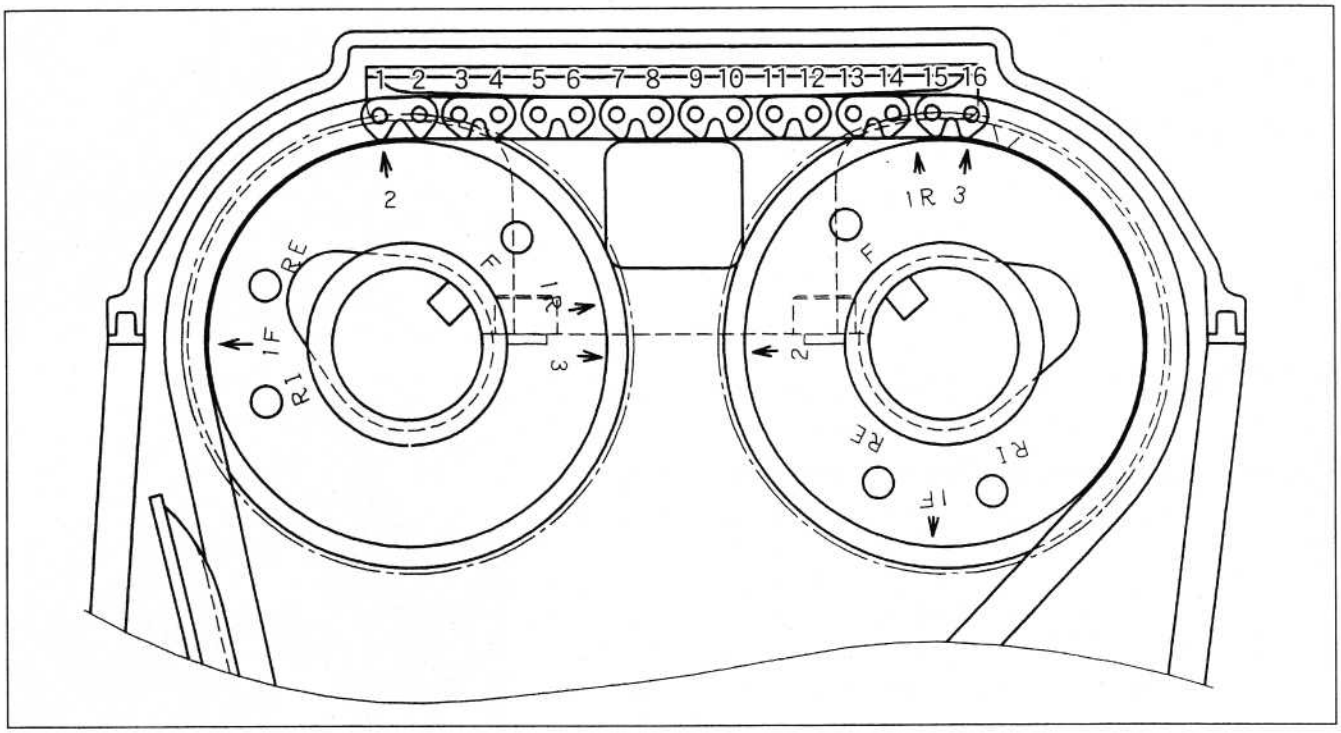

Cam chain tension adjuster

- Remove the cam chain tension adjuster bolt ① and gasket.

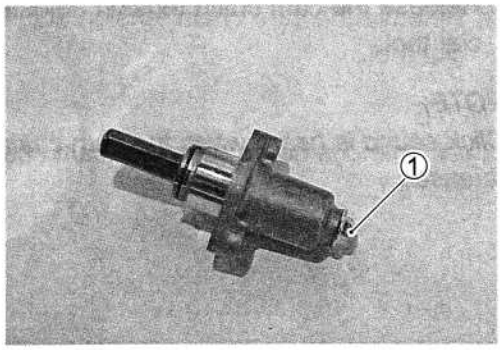

- Shorten the push rod ② with a screwdriver by turning it clockwise.

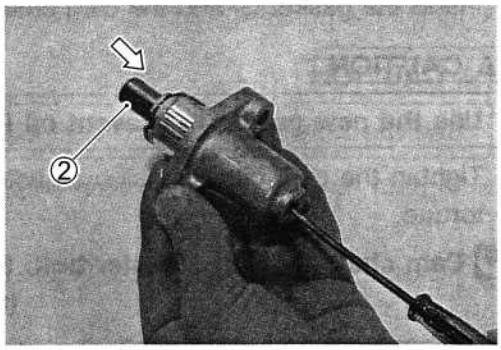

- Hold the push rod ② using the special tool. Now the cam chain tension adjuster is ready to install.

TOOL 09917-62430: Cam chain tension adjuster locking tool

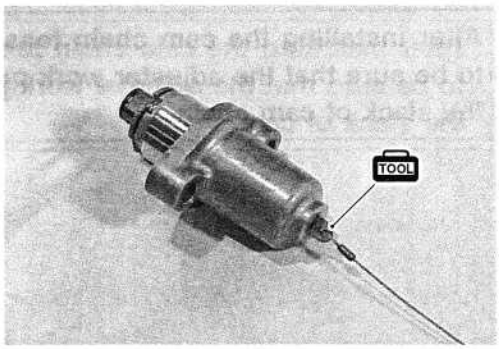

- Install the new gasket ①.

▲ CAUTION

Use the new gasket to prevent oil leakage.

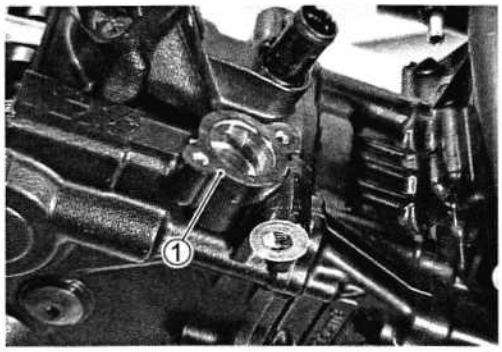

- Install the cam chain tension adjuster as shown and tighten its mounting bolts ② to the specified torque.

Cam chain tension adjuster mounting bolt: 10 N·m (1.0 kgf·m, 7.0 lb-ft)

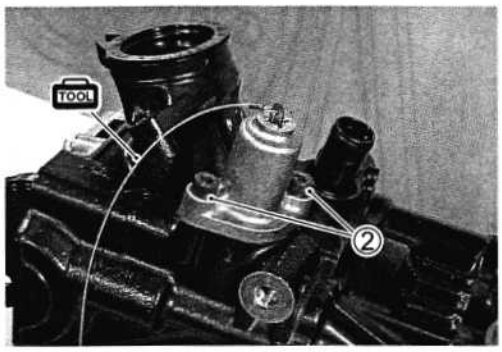

- Release the cam chain tension adjuster by removing the special tool.

NOTE:
Click sound is heard when the cam chain tension adjuster rod is released.

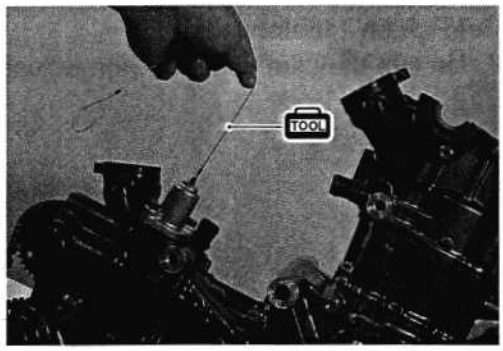

- Install the gasket ③ and the cam chain tension adjuster bolt.

▲ CAUTION

Use the new gasket to prevent oil leakage.

- Tighten the cam chain tension adjuster bolt to the specified torque.

Cam chain tension adjuster bolt: 8 N·m (0.8 kgf·m, 6.0 lb-ft)

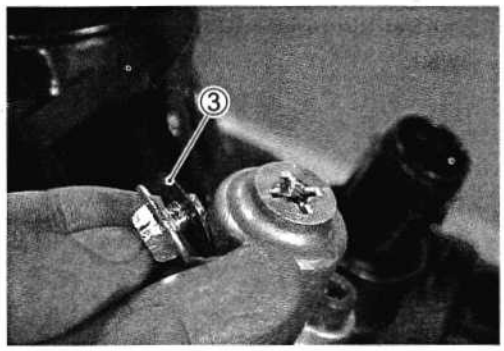

▲ CAUTION

After installing the cam chain tension adjuster, check to be sure that the adjuster work properly by checking the slack of cam chain.

- Install the cam chain guide.

Cam chain guide bolt: 10 N·m (1.0 kgf·m, 7.0 lb-ft)

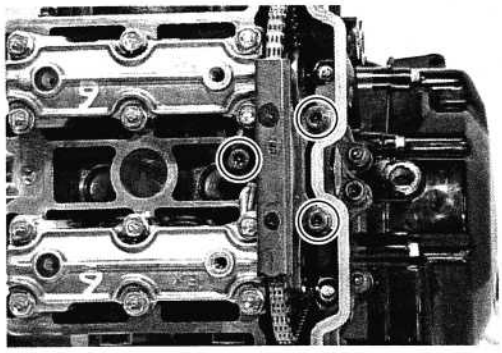

NO.2 (Rear) Camshaft

- From the position where the No.1 (Front) camshafts have now been installed, rotate the generator rotor 360 degrees (1 turn) and align the "| F" line Ⓑ on the generator rotor with the index mark Ⓐ of the valve timing inspection hole.

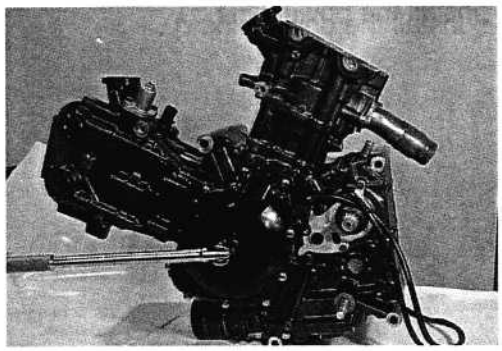

▲ CAUTION

Pull the cam chain upward, or the chain will be caught between crankcase and cam drive sprocket.

▲ CAUTION

To adjust the camshaft timing correctly, be sure to align "| F" line Ⓑ with the index mark Ⓐ and hold this position when installing the camshafts.

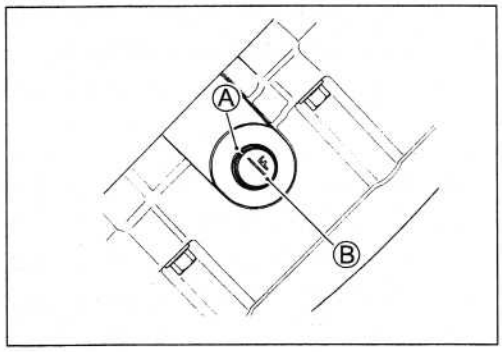

- Pull the cam chain lightly.
- The intake camshaft sprocket has an arrow marked "1" Ⓒ. Turn the intake camshaft so that the arrow is aligned with the gasket surface of the cylinder head.
- Engage the cam chain with the intake camshaft sprocket.

NOTE:
Before installing the camshaft, check that the tappets are installed correctly.

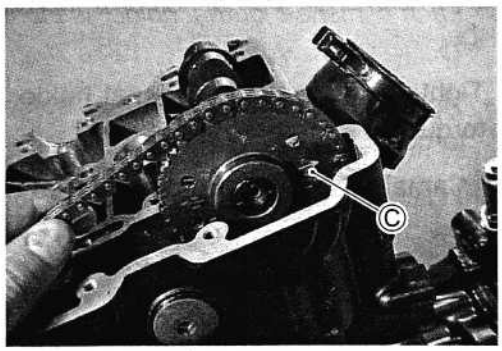

- The other arrow marked "2" should now be pointing straight up. Starting from the roller pin that is directly above the arrow marked "2", count out 16 roller pins (from the intake camshaft side going towards the exhaust camshaft side). Engage the 16th roller pin Ⓐ on the cam chain with the arrow marked "3" on the exhaust sprocket.

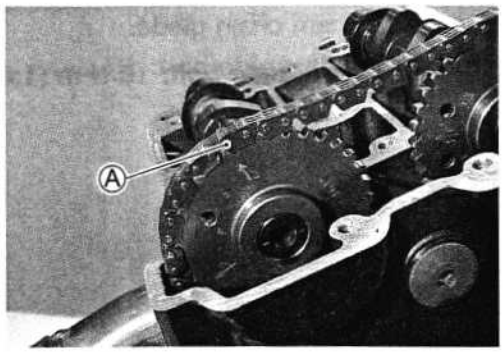

NOTE:
The cam chain should now be on all three sprockets. Be careful not to move the crankshaft until the camshaft journal holders and cam chain tension adjuster is secured.

- Install the dowel pins ①.

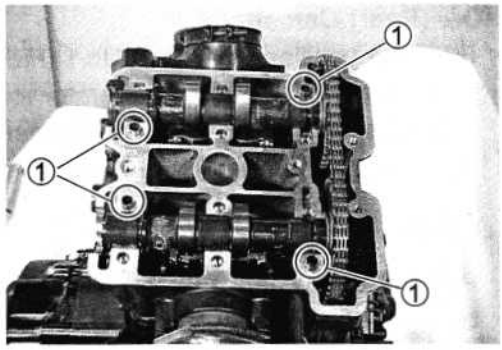

- Install the camshaft journal holders, intake and exhaust.
- Fasten the camshaft journal holders evenly by tightening the camshaft journal holder bolts sequentially and diagonally.

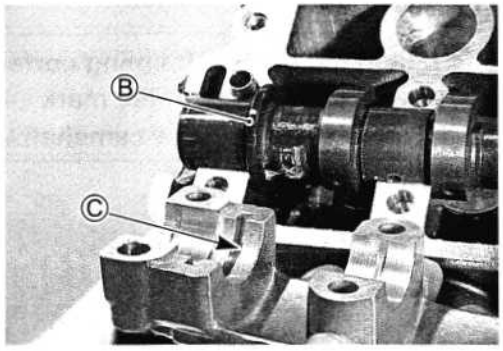

NOTE:
- ** Align the flange Ⓑ of the camshafts with the groove Ⓒ of the camshaft journal holders.*
- ** Damage to head or camshaft journal holder thrust surfaces may result if the camshaft journal holders are not drawn down evenly.*
- ** Each camshaft journal holder is identified with a cast-on letter Ⓓ.*

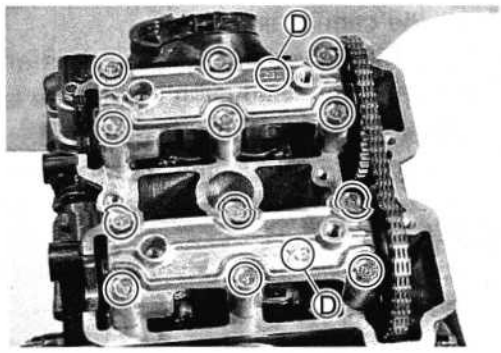

- Tighten the camshaft journal holder bolts to the specified torque.

Camshaft journal holder bolt: 10 N·m
(1.0 kgf·m, 7.0 lb-ft)

⚠ CAUTION

The camshaft journal holder bolts are made of a special material and much superior in strength, compared with other types of high strength bolts.
Take special care not to use other types of bolts instead of these special bolts. To identify these bolts, each of them has a figure "9" on its head.

- Recheck the No.2 (Rear) camshaft positions, intake and exhaust.

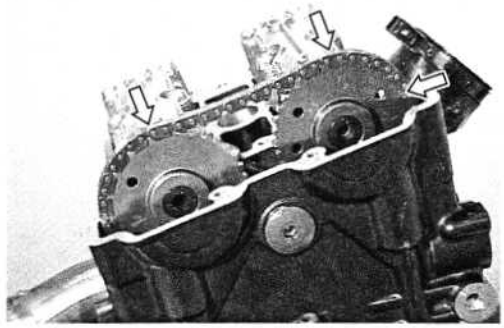

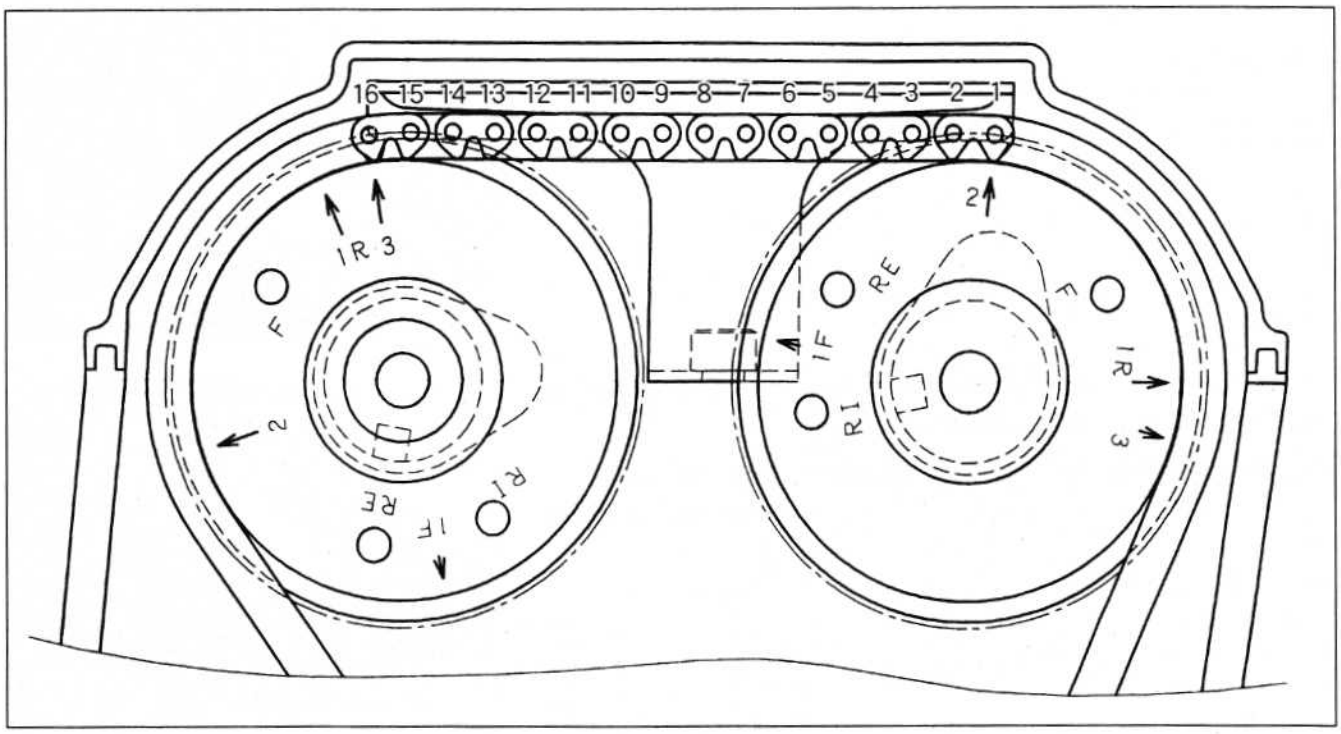

Camchain tension adjuster

- Remove the cam chain tension adjuster bolt ① and gasket.

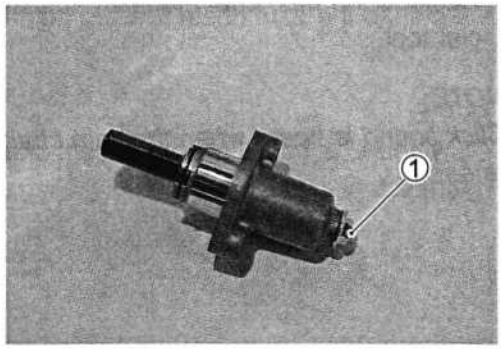

- Shorten the push rod ② with a screwdriver by turning it clockwise.

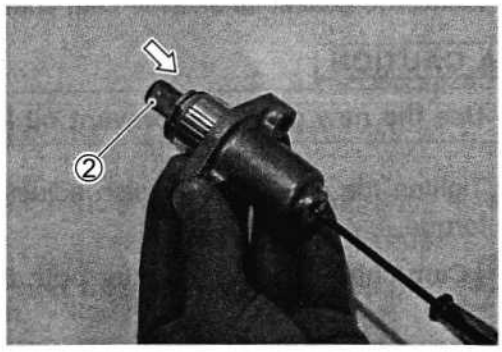

- Hold the push rod ② using the special tool. Now the cam chain tension adjuster is ready to install.

TOOL 09917-62430: Cam chain tension adjuster locking tool

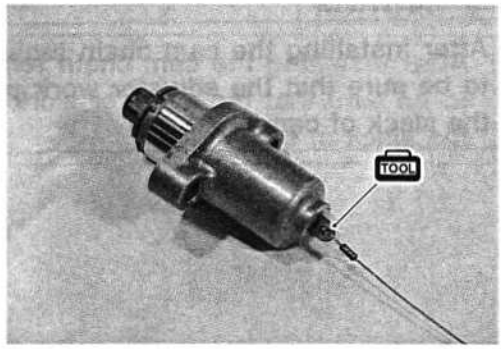

- Install the new gasket ①.

▲ CAUTION

Use the new gasket to prevent oil leakage.

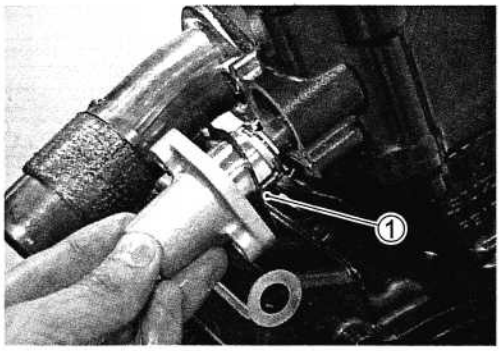

- Install the cam chain tension adjuster as shown and tighten its mounting bolts ② to the specified torque.

Cam chain tension adjuster mounting bolt: 10 N·m (1.0 kgf·m, 7.0 lb-ft)

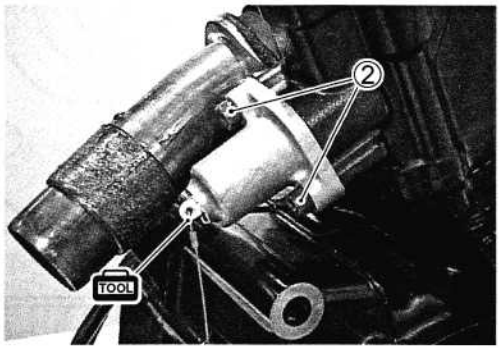

- Release the cam chain tension adjuster by removing the special tool.

NOTE:
Click sound is heard when the cam chain tension adjuster rod is released.

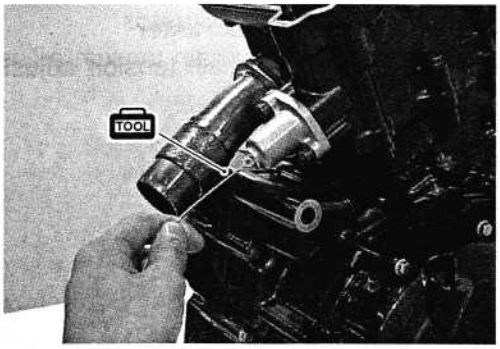

- Install the gasket ③ and the cam chain tension adjuster bolt.

▲ CAUTION

Use the new gasket to prevent oil leakage.

- Tighten the cam chain tension adjuster bolt to the specified torque.

Cam chain tension adjuster bolt: 8 N·m (0.8 kgf·m, 6.0 lb-ft)

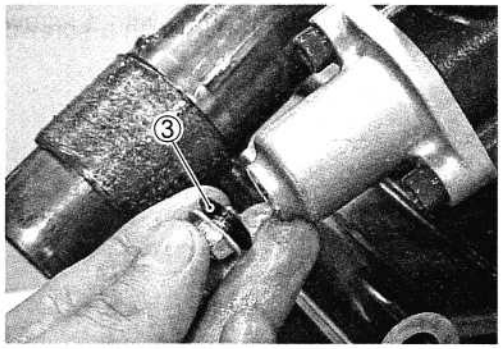

▲ CAUTION

After installing the cam chain tension adjuster, check to be sure that the adjuster work properly by cheking the slack of cam chain.

- Install the cam chain guide.

Cam chain guide bolt: 10 N·m (1.0 kgf·m, 7.0 lb-ft)

- After installing the No.2 (Rear) camshafts, rotate the generator rotor (some turns), and recheck the positions of the camshafts.

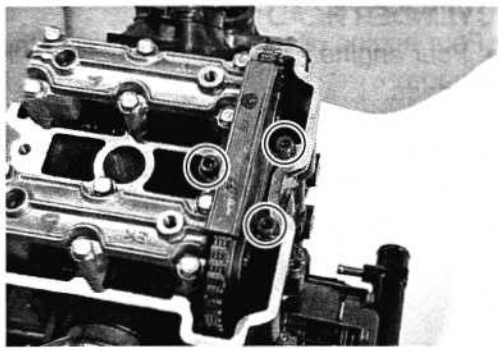

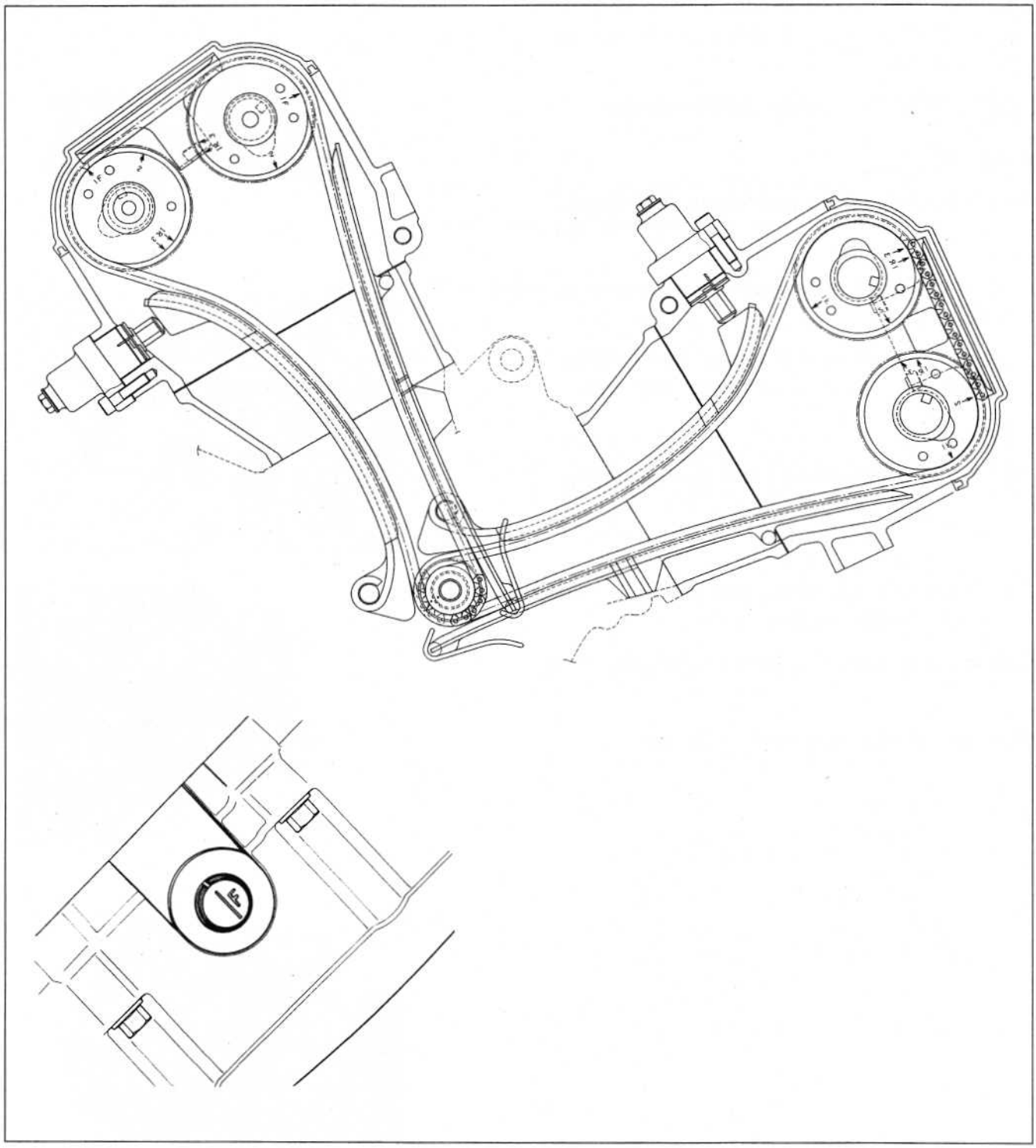

CYLINDER HEAD COVER

- Pour engine oil in each oil pocket in the front and rear cylinder heads.

NOTE:
Be sure to check the tappet clearance. (☞ 2-8)

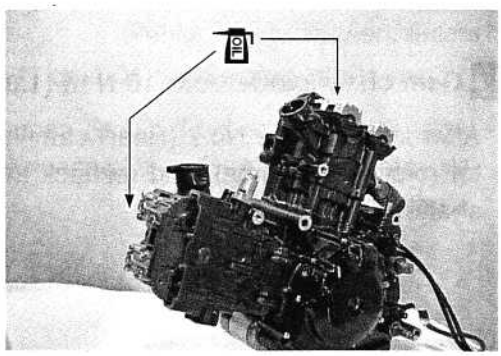

- Install the new gaskets to each cylinder head cover.
- Apply SUZUKI BOND "1207B" to the cam end caps of the gaskets as shown.

1207B 99104-31140: SUZUKI BOND "1207B"

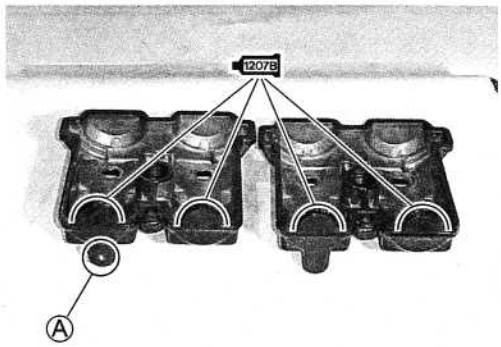

⚠ CAUTION

Use the new gaskets to prevent oil leakage.

NOTE:
The front cylinder head cover has the radiator mounting bolt's thread Ⓐ.

- Place the cylinder head covers on each cylinder head.
- Fit the gaskets ①, ② to each head cover bolt.

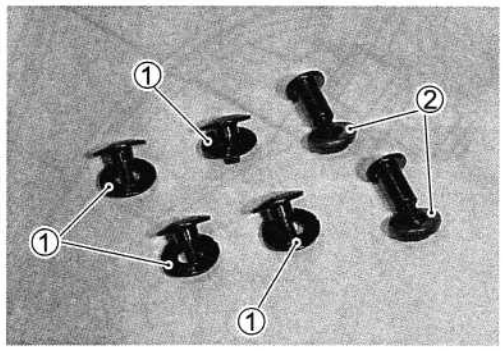

⚠ CAUTION

Use the new gaskets to prevent oil leakage.

- After applying engine oil to the gaskets ①, ②, tighten the head cover bolts to the specified torque.

Head cover bolt: 14 N·m (1.4 kgf·m, 10.0 lb-ft)

NOTE:
The metal side of the gasket ② faces out.

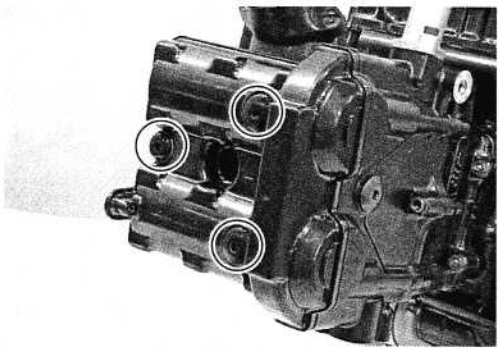

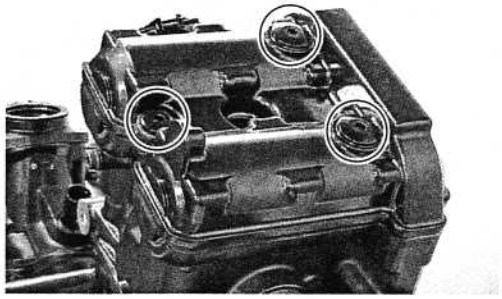

- Tighten the valve timing inspection plug ① and the generator cover plug ② to the specified torque.

Valve timing inspection plug: 23 N·m (2.3 kgf·m, 16.5 lb-ft)
Generator cover plug: 11 N·m (1.1 kgf·m, 8.0 lb-ft)

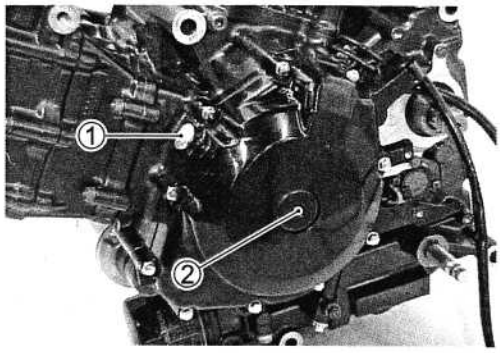

- Install the thermostat case ③ with the water hoses ④ and tighten the clamp screws securely. (☞ 8-19)

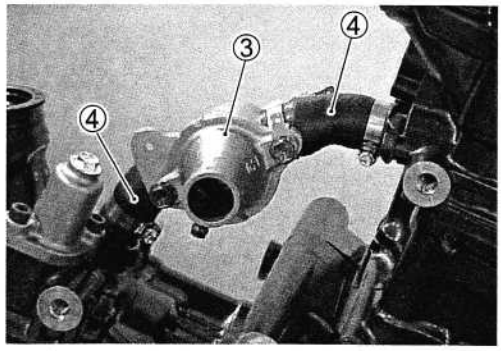

- Connect the hose ⑤.
- Connect the ground lead wire.
- Install the crankcase breather hose ⑥.
- Install the spark plugs. (☞ 2-7)

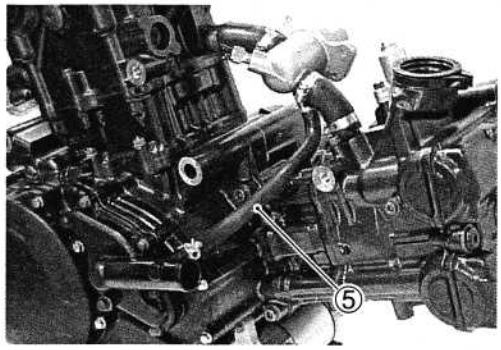

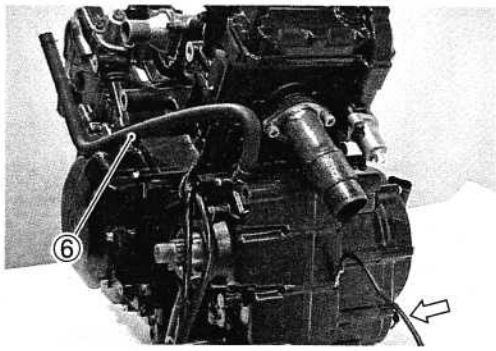

FUEL AND LUBRICATION SYSTEM

CONTENTS

FUEL SYSTEM 4- 2
FUEL TANK LIFT-UP 4- 4
FUEL TANK 4- 5
REMOVAL 4- 5
REMOUNTING 4- 6
VACUUM FUEL VALVE 4- 6
REMOVAL 4- 7
INSPECTION AND CLEANING 4- 7
REMOUNTING 4- 7
FUEL LEVEL INDICATOR LIGHT SWITCH 4- 8
REMOVAL 4- 8
INSPECTION 4- 8
REMOUNTING 4- 8
FUEL PUMP 4- 9
REMOVAL 4- 9
INSPECTION 4-10
REMOUNTING 4-10
CARBURETOR 4-11
CONSTRUCTION 4-11
SPECIFICATIONS 4-12
I.D. NO. LOCATION 4-13
DIAPHRAGM AND PISTON OPERATION 4-14
SLOW SYSTEM 4-15
TRANSIENT ENRICHMENT SYSTEM 4-15
MAIN SYSTEM 4-16
STARTER (ENRICHER) SYSTEM 4-17
FLOAT SYSTEM 4-17
REMOVAL 4-18
DISASSEMBLY 4-20
CARBURETOR CLEANING 4-27
CARBURETOR INSPECTION 4-27
REASSEMBLY AND REMOUNTING 4-30
CARBURETOR SYNCHRONIZATION 4-35
FUEL LEVEL ADJUSTMENT 4-38
LUBRICATION SYSTEM 4-39
OIL PRESSURE 4-39
OIL FILTER 4-39
OIL STRAINER 4-39
ENGINE LUBRICATION SYSTEM CHART 4-40
ENGINE LUBRICATION SYSTEM 4-41

FUEL SYSTEM

A vacuum operated fuel pump is used to supply fuel from the fuel tank to the carburetor. The pump is necessary when the level in the fuel tank is lower than the carburetor fuel bowl.
The fuel sent under pressure by the fuel pump flows into the float chamber when the float of the carburetor has dropped and the needle valve is open. When the needle valve closes, the pressure of the fuel in the hose connecting the carburetor and the fuel pump increases, and when the set pressure is reached, relief valve (ball valve) in the fuel pump is opened by the fuel pressure to prevent excessive supply. (☞ 4-3)

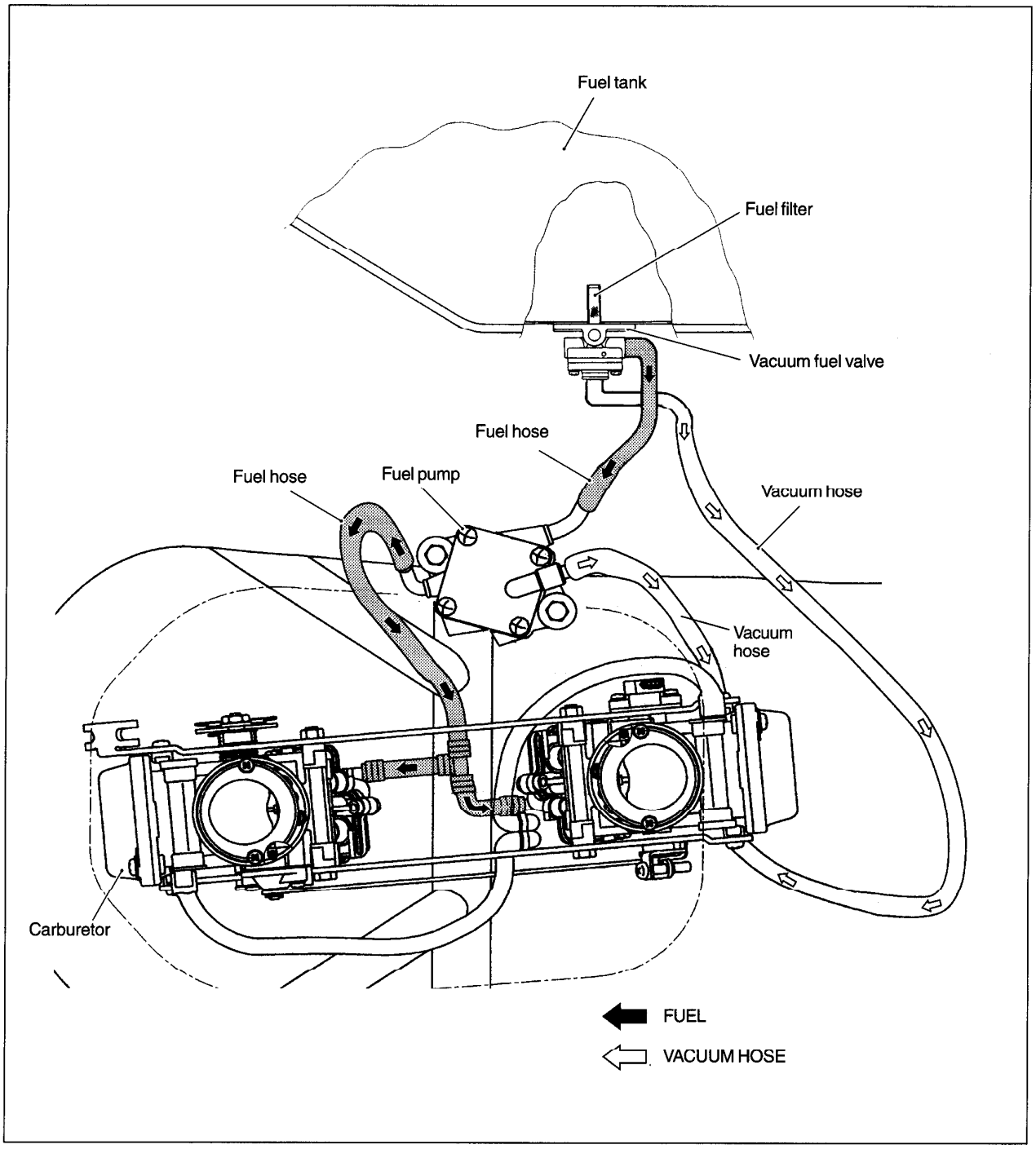

FUEL PUMP OPERATION

INTAKE PROCESS

As the crankcase internal pressure decreases, negative pressure is applied to the diaphragm chamber Ⓐ pressing the diaphragm to go down. The volume of the diaphragm chamber Ⓑ increases and the intake valve ① is opened.

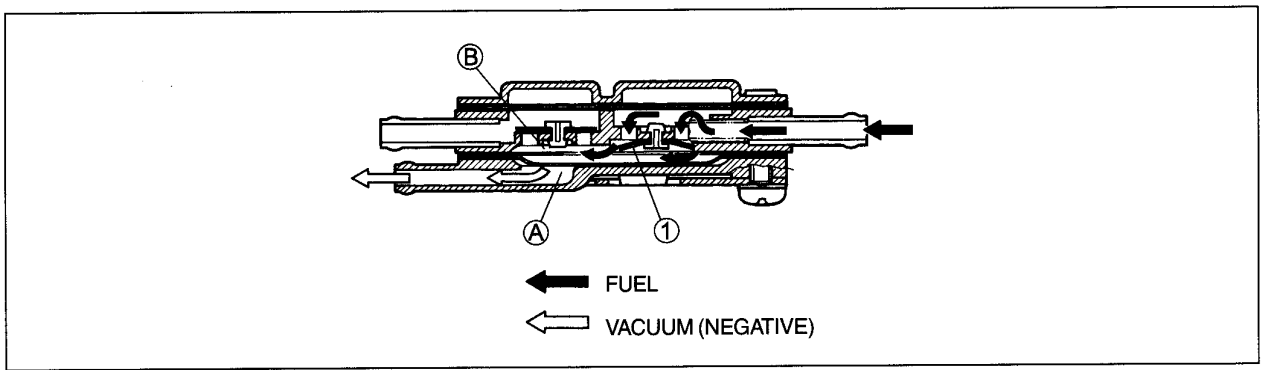

DISCHARGE PROCESS

As the crankcase internal pressure increases, the diaphragm goes up and gasoline is discharged out of the diaphragm chamber Ⓑ through the discharge valve ②.

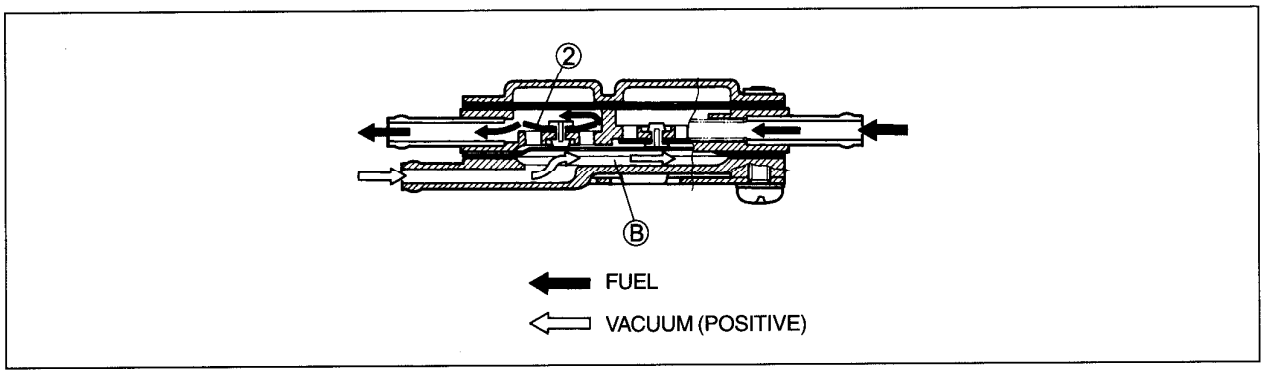

CONTROL OF FUEL PRESSURE

As the engine speed and the negative pressure cycle in the crankcase increase, fuel pressure from the discharge side toward the carburetor increases. Under such a condition, the ball valve ③ is opened to return the gasoline to the intake side, controlling the fuel pressure.

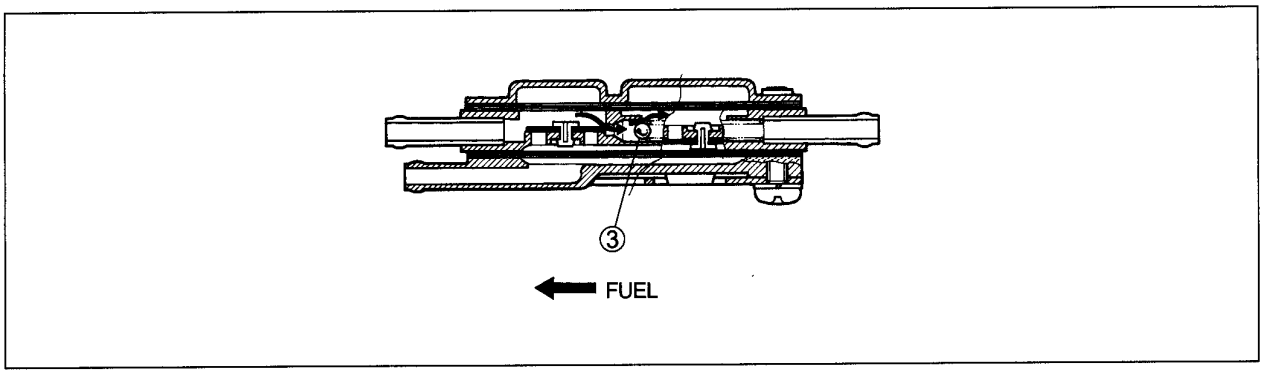

FUEL TANK LIFT-UP

- Remove the frame cover bolt.

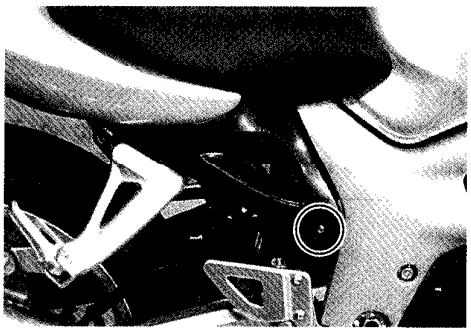

- Depress the head of fastener center piece and pull out the fastener.
- Remove the frame cover (R).
- Remove the frame cover (L) as same as.

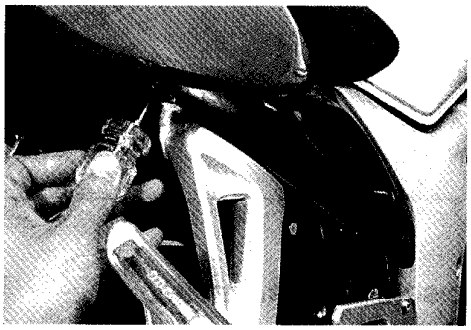

- Remove the front seat.

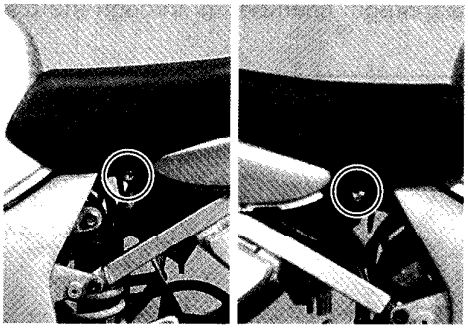

- Remove the fuel tank mounting bolts.

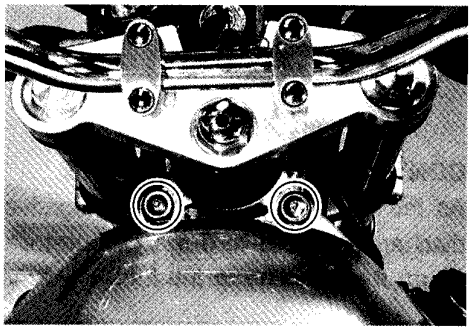

- Take up the fuel tank prop ①.

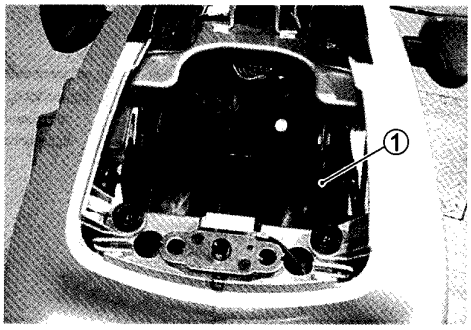

- Lift and support the fuel tank with its prop stay.

FUEL TANK

REMOVAL

- Remove the front seat.
- Lift and support the fuel tank with its prop stay. (☞ 4-4)
- Disconnect the fuel hose ① and vacuum hose ② from the vacuum fuel valve and fuel level indicator switch lead wire coupler ③.

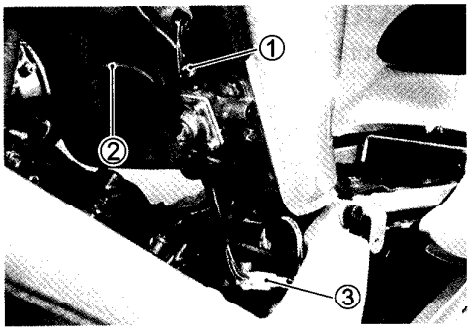

⚠ WARNING

Gasoline is highly flammable and explosive.
Keep heat, spark and flame away.

- Disconnect the breather hose ④.

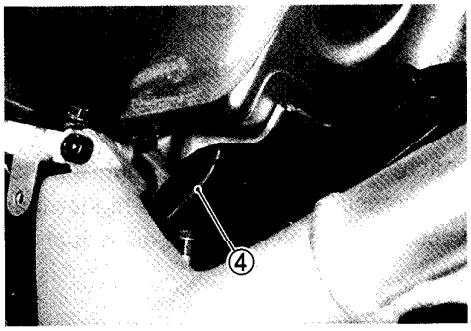

⚠ CAUTION

Avoid bending the fuel tank air breather hose when remounting the fuel tank to prevent the stoppage of fuel flow. (Refer to page 8-18 for the air breather hose routing.)

- Remove the fuel tank prop and lower down the fuel tank.
- Remove the fuel tank bracket bolts.
- Remove the fuel tank.

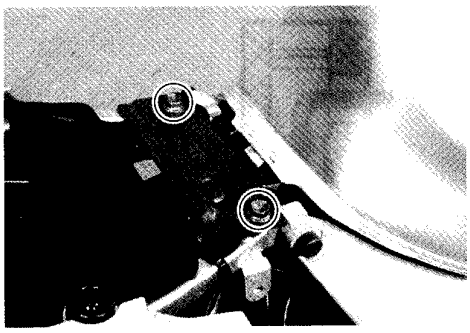

- Remove the fuel tank bracket ①.

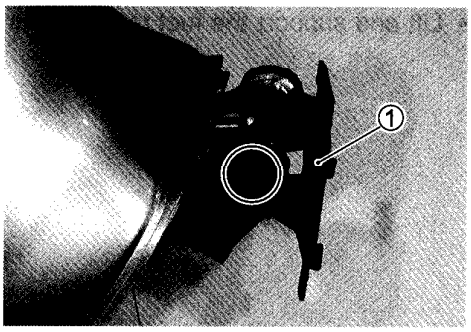

REMOUNTING

- Remount the fuel tank in the reverse order of removal.

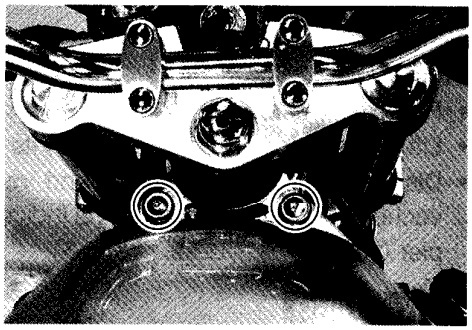

VACUUM FUEL VALVE

When the engine is not operating, the vacuum fuel valve ① is kept closed by the tension of the spring ②, which closes the fuel passageway and stops the flow of fuel to the carburetors.
When the engine has started, negative pressure (vacuum) Ⓐ is generated in the combustion chamber and reaches the diaphragm through a passage in the carburetor's main bore and the vacuum hose. This negative pressure (vacuum) Ⓐ is higher than the spring pressure which causes the diaphragm to force open the vacuum fuel valve ① and allow fuel to flow to the carburetor assembly.

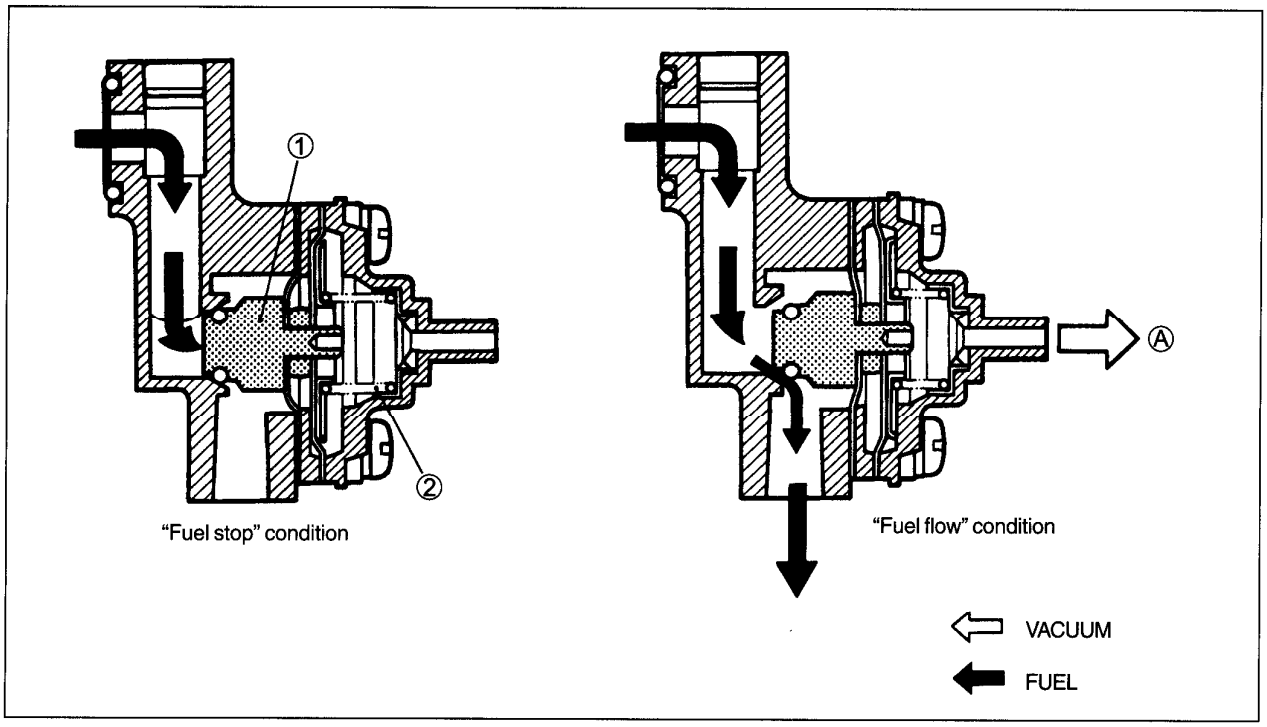

REMOVAL

- Remove the fuel tank. (☞ 4-5)
- Remove the vacuum fuel valve by removing the mounting bolts.

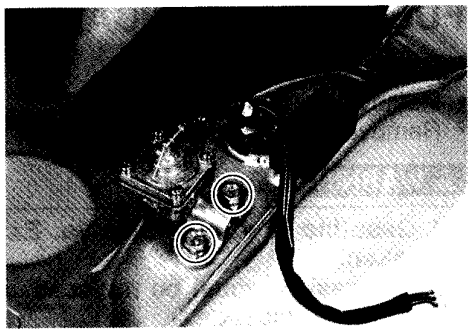

⚠ WARNING

- **Gasoline is very explosive. Extreme care must be taken.**
- **The gaskets ① and O-ring ② must be replaced with new ones to prevent fuel leakage.**

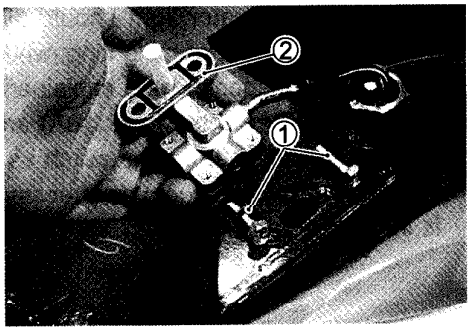

INSPECTION AND CLEANING

Connect the vacuum pump gauge to the vacuum port of the vacuum fuel valve. Apply negative pressure to the vacuum fuel valve and blow into the fuel outlet port. If air does not flow out, replace the vacuum fuel valve with a new one.

TOOL 09917-47010: Vacuum pump gauge set

DATA Negative pressure: 6.8 – 13.6 kPa
(0.068 – 0.136 kgf/cm², 0.97 – 1.93 psi)

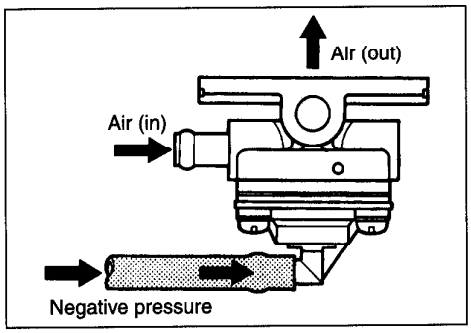

⚠ WARNING

Gasoline and gasoline vapors are toxic. There usually remains a small amount of fuel in the vacuum fuel valve, so when checking the valve make sure you do not swallow the fuel when blowing into the fuel outlet port.

⚠ CAUTION

Only use a hand operated vacuum pump. Do not apply high negative pressure to (more than 13.6 kPa) prevent the vacuum fuel valve from being damaged.

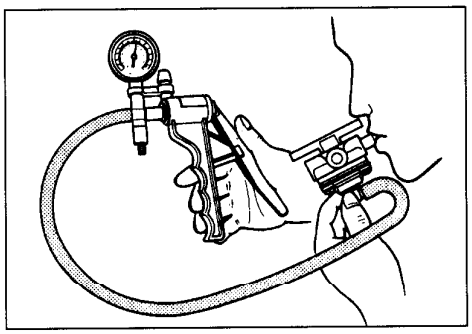

If the fuel filter is dirty with sediment or rust, fuel will not flow smoothly and loss in engine power may result. Clean the fuel filter with compressed air.

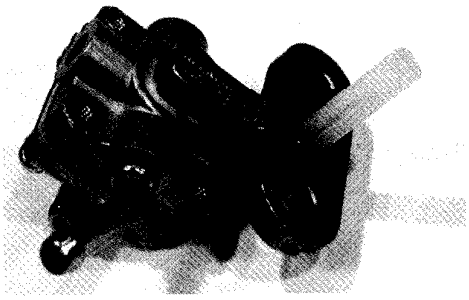

REMOUNTING

Remount the vacuum fuel valve in the reverse order of removal.

FUEL LEVEL INDICATOR LIGHT SWITCH

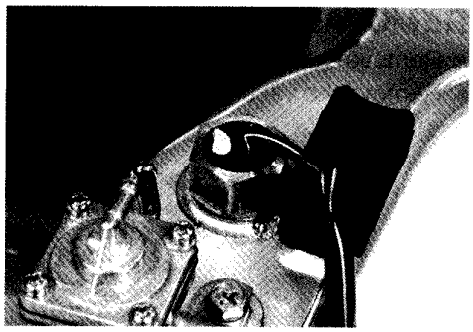

REMOVAL

- Remove the fuel tank. (☞ 4-5)
- Remove the fuel level indicator light switch.

⚠ WARNING

> *** Gasoline is very explosive. Extreme care must be taken.**
> *** The gaskets must be replaced with new ones to prevent fuel leakage.**

The fuel level indicator light should flicker, when its switch Ⓐ turn "ON" and should keep lighting, when its switch Ⓑ turn "ON". These system inspection are explained as follows.

- Connect a 12V battery fuse (10A) and test bulb (14V, 3W) to the fuel level indicator light switch as shown.
  The test bulb should come on after several seconds if the switch is in good condition.

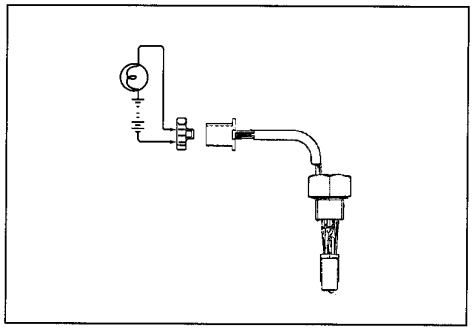

- When the switch is immersed and stirred in gasoline under the above condition, the bulb should go out. If the bulb remains lit, replace the unit with a new one.

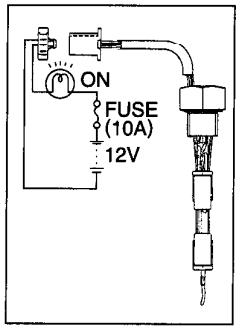

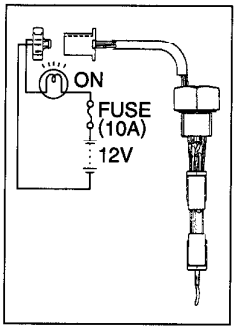

⚠ WARNING

> **Always use extreme caution when handling gasoline.**

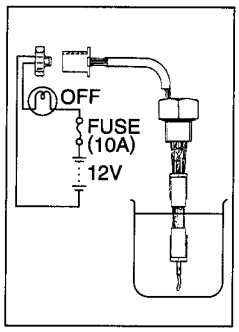

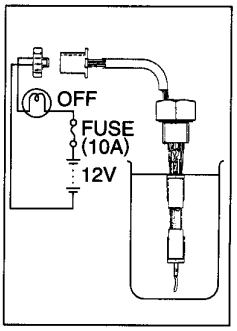

REMOUNTING

- Remount the fuel tank in the reverse order of removal.

FUEL PUMP

REMOVAL

- Lift and support the fuel tank.
- Loosen the carburetor clamp screws at the air cleaner box side.

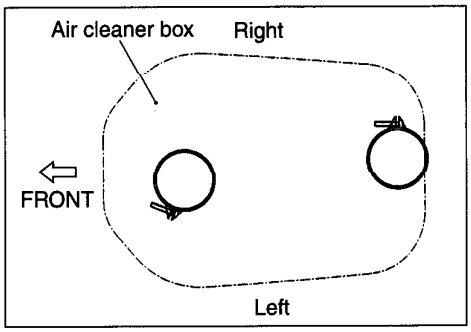

- Disconnect the cylinder breather hose ① and the crankcase breather hose ②.
- Remove the air cleaner with the oil catch tank and the drain hose.

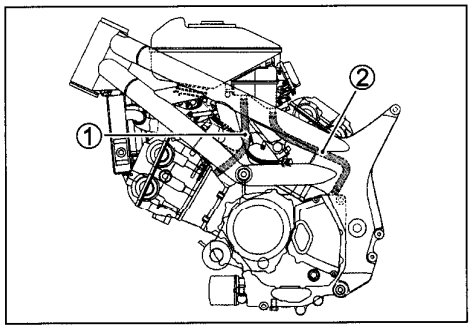

- Disconnect the fuel hoses ③, ④ and the vacuum hose ⑤.

⚠ WARNING

Gasoline is highly flammable and explosive.
Keep heat, spark and flames away from gasoline.

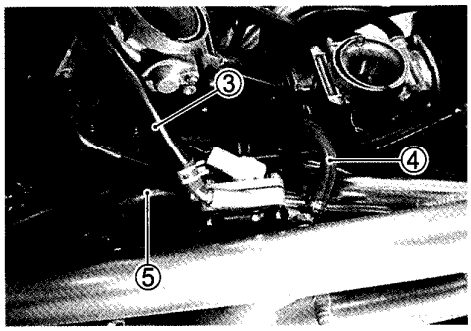

- Remove the fuel pump ⑥.

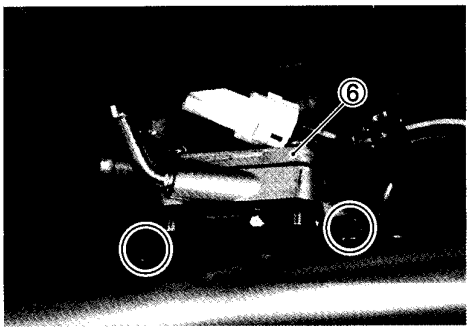

INSPECTION

- Lift and support the fuel tank (☞ 4-4 and -5)
- Remove the air cleaner. (☞ 4-9)
- Disconnect the fuel hose ① and insert the free end of the hose into a receptacle.

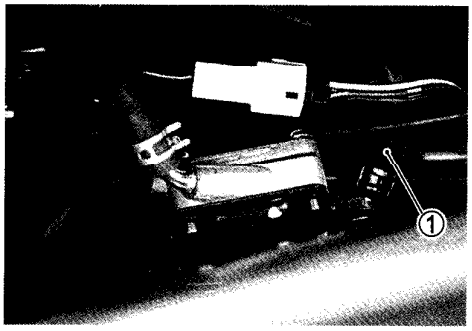

- Shift the transmission into the neutral and turn the ignition switch "ON".
- Crank the engine a few seconds with starter motor by depressing starter button and then check if fuel flow.

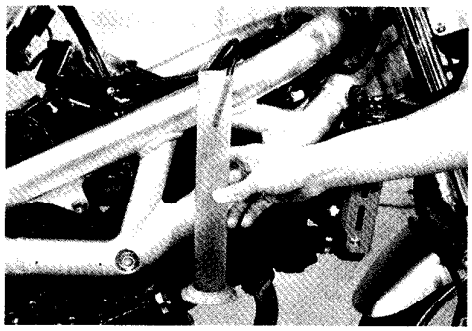

⚠ WARNING

Gasoline is highly flammable and explosive.
Keep heat, spark and flames away from gasoline.

- If fuel does not flow check the vacuum fuel valve. If vacuum fuel valve is correct, replace the fuel pump with a new one.

REMOUNTING

- Connect the fuel hoses and the vacuum hose.
- Remount the fuel pump.

Fuel pump mounting bolt: 10 N·m (1.0 kgf·m, 7.0 lb-ft)

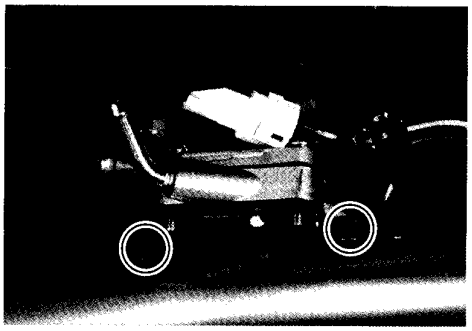

NOTE:

* *The arrows on the fuel pump indicate the directions of fuel flows.*
* *Connect the fuel hoses according to the arrow directions.*

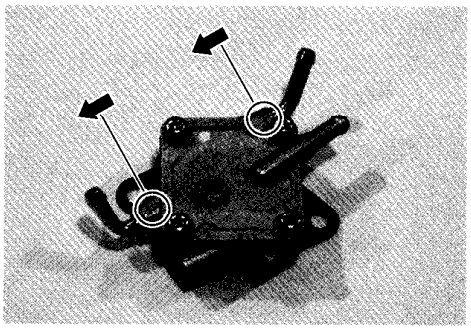

CARBURETOR

CONSTRUCTION

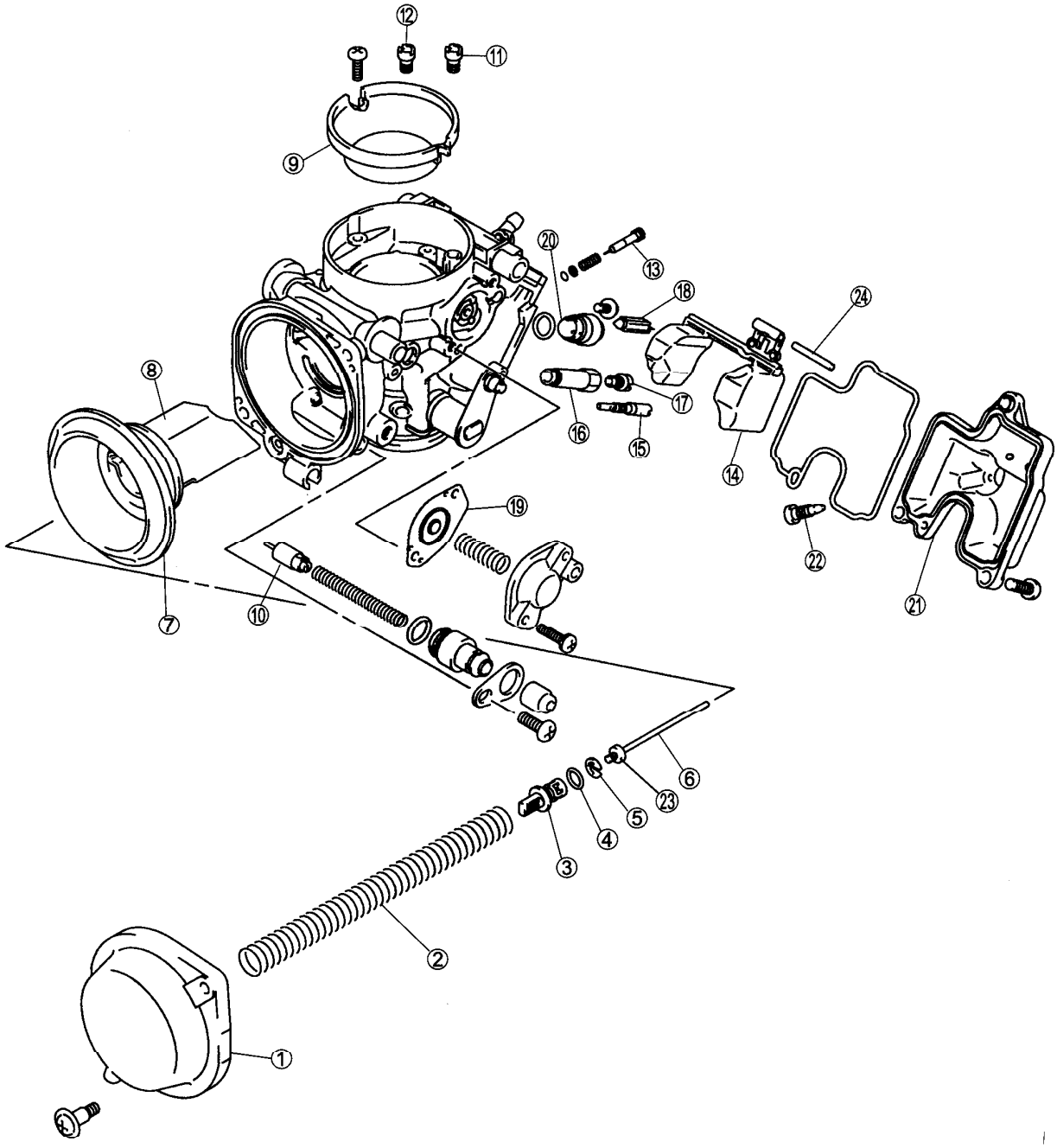

①Top cap
②Spring
③Jet needle holder
④O-ring
⑤E-ring
⑥Jet needle
⑦Diaphragm
⑧Piston valve
⑨Funnel
⑩Starter plunger
⑪Pilot air jet #1
⑫Pilot air jet #2
⑬Pilot screw
⑭Float
⑮Pilot jet
⑯Main jet holder
⑰Main jet
⑱Needle valve
⑲Coasting valve
⑳Valve seat
㉑Float chamber
㉒Drain screw
㉓Ring
㉔Float pin

SPECIFICATIONS

ITEM		SPECIFICATION	
		E-02, 04, 17, 22, 24, 25, 34	E-03, 28
Carburetor type		MIKUNI BDSR39	←
Bore size		39 mm	←
I.D. No.		20F0	20F2
Idle r/min.		1 300 ± 100 r/min.	←
Float height		7.0 ± 0.5 mm (0.28 ± 0.02 in)	←
Fuel level		16.9 ± 0.5 mm (0.68 ± 0.02 in)	←
Main jet	(M.J)	#137.5	#137.5
Jet needle	(J.N)	6E38-54-2	6E42-54
Needle jet	(N.J)	P-0	P-0M
Throttle valve	(Th.V)	#95	←
Pilot jet	(P.J)	#17.5	#15
Pilot screw	(P.S)	PRE-SET (2 1/2 turns back)	PRE-SET
Throttle cable play		2.0 – 4.0 mm (0.08 – 0.16 in)	←

ITEM		SPECIFICATION	
		E-33	E-22 (U-TYPE)
Carburetor type		MIKUNI BDSR39	←
Bore size		39 mm	←
I.D. No.		20F4	20F5
Idle r/min.		1 300 ± 100 r/min	←
Float height		7.0 ± 0.5 mm (0.28 ± 0.02 in)	←
Fuel level		16.9 ± 0.5 mm (0.68 ± 0.02 in)	←
Main jet	(M.J)	#137.5	#137.5
Jet needle	(J.N)	6E43-54	6E38-54-2
Needle jet	(N.J)	P0-M	P-0
Throttle valve	(Th.V)	#95	←
Pilot jet	(P.J)	#15	#17.5
Pilot screw	(P.S)	PRE-SET	PRE-SET (3 1/2 turns back)
Throttle cable play		2.0 – 4.0 mm (0.08 – 0.16 in)	←

I.D. NO. LOCATION

Each carburetor has I.D. Number Ⓐ stamped on the carburetor body according to its specifications.

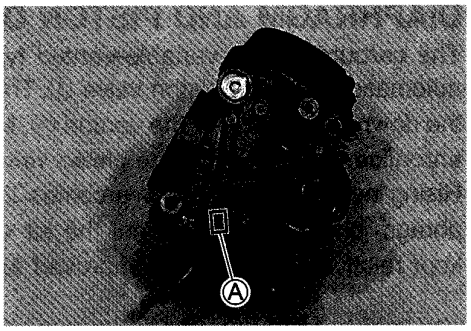

DIAPHRAGM AND PISTON OPERATION

The carburetor is a variable-venturi type, whose venturi cross sectional area is increased or decreased automatically by the piston valve ①. The piston valve moves according to the negative pressure present on the downstream side of the venturi Ⓐ. Negative pressure is admitted into the diaphragm chamber ② through an orifice ③ provided in the piston valve ①.

Rising negative pressure overcomes the spring ④ force, causing the piston valve ① to rise into the diaphragm chamber and prevent the air velocity from increasing. Thus, air velocity in the venturi passage is kept relatively constant for improved fuel atomization and the precise air/fuel mixture.

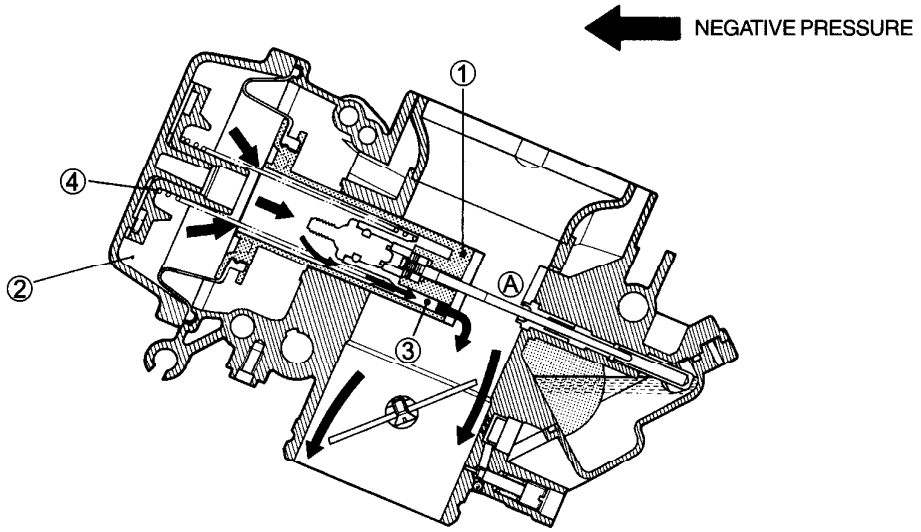

LOWER POSITION OF THE PISTON VALVE

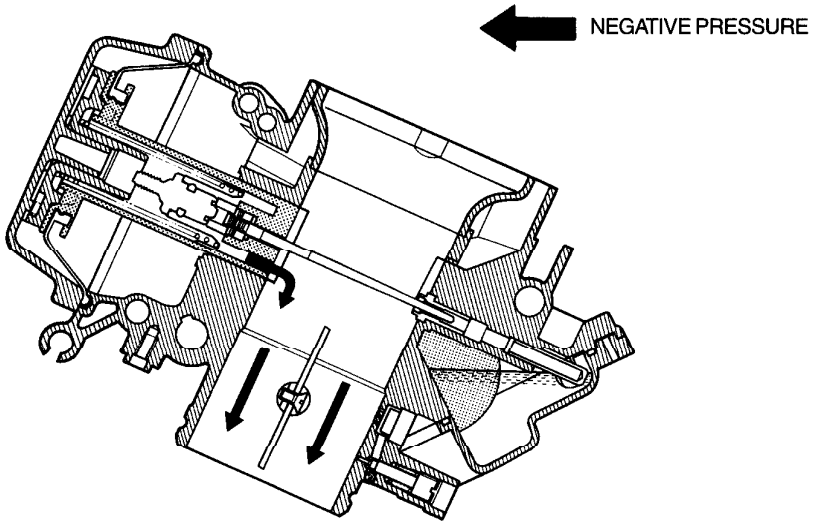

UPPER POSITION OF THE PISTON VALVE

SLOW SYSTEM

This system supplies fuel to the engine during engine operation with throttle valve ① closed or slight opened. The fuel from the float chamber ② is first passage and metered by the pilot jet ③ where it mixes with air coming in through #1 pilot air jet ④ and #2 pilot air jet ⑤.

This mixture, rich with fuel, then goes up through pilot pipe to pilot screw ⑥. A part of the mixture is discharged into the main bore out of by-pass ports ⑦. The remainder is then metered by pilot screw and sprayed out into the main bore through pilot outlet ⑧.

TRANSIENT ENRICHMENT SYSTEM

The transient enrichment system is a device which keeps fuel/air mixture ratio constant in order not to generate unstable combustion when the throttle grip is returned suddenly during high speed driving. For normal operation, sum of the air from the #1 pilot air jet ④ and #2 pilot air jet ⑤ keeps proper fuel/air mixture ratio. But when the throttle valve is closed suddenly, a large negative pressure generated on cylinder side works on to a diaphragm ⑨. The ball ⑩ held by the diaphragm ⑨ closes the air passage from #2 pilot air jet ⑤, therefore, the fuel/air mixture becomes rich with fuel.

This system is to keep the combustion condition constant by varying the fuel/air mixture ratio by controlling air flow from the pilot air jet.

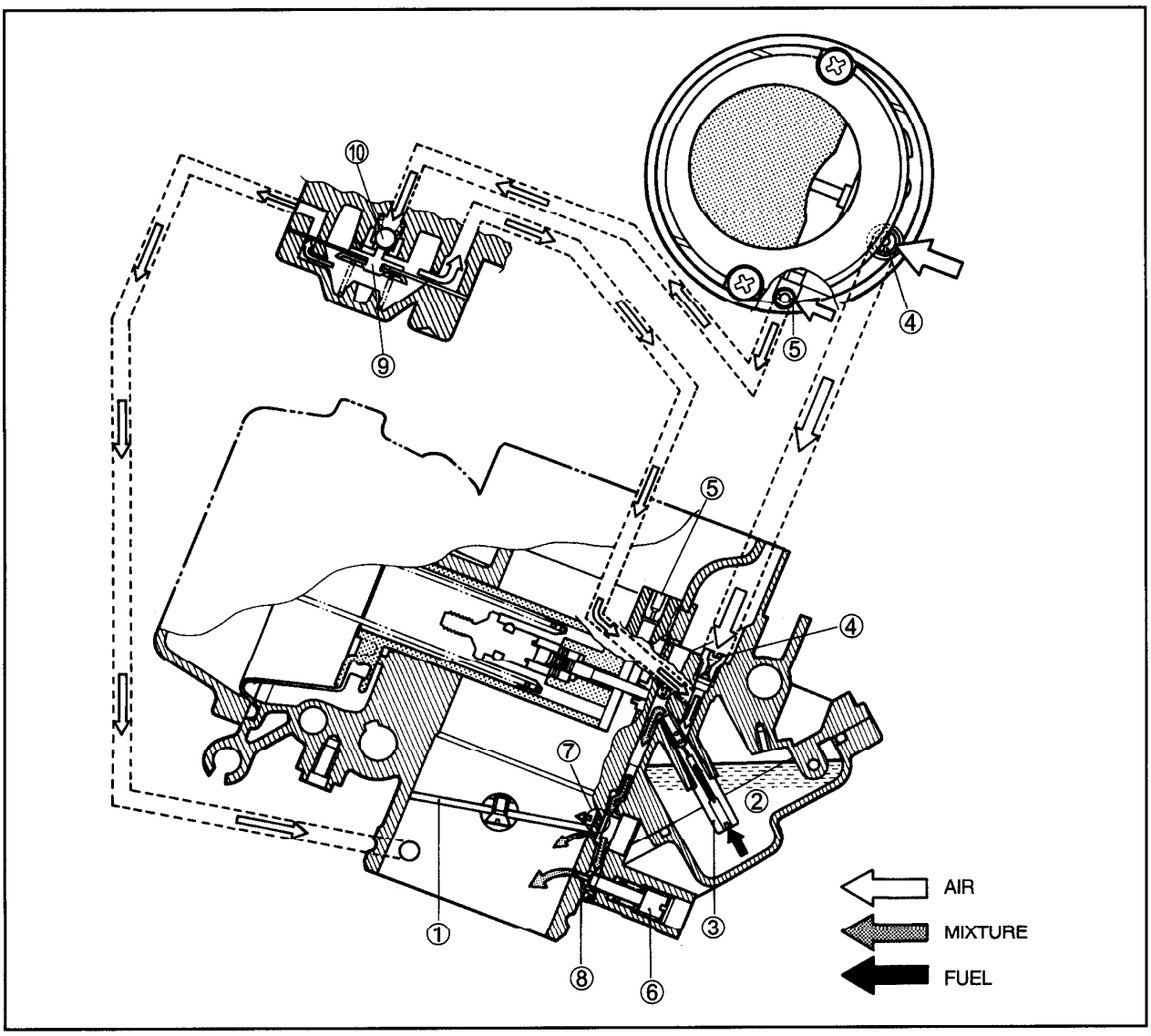

MAIN SYSTEM

As the throttle valve ① is opened, engine speed rises and negative pressure in the venturi Ⓐ increases. This causes the piston valve ② moves upward.

The fuel in the float chamber ③ is metered by the main jet ④. The metered fuel passes around main air bleed pipe ⑤, mixes with the air admitted through main air jet ⑥ to form an emulsion and emulsion fuel enters needle jet ⑦.

The emulsified fuel then passes through the clearance between the needle jet ⑦ and jet needle ⑧and is discharged into the venturi Ⓐ, where it meets the main air stream being drawn by the engine.

Mixture proportioning is accomplished in the needle jet ⑦. The clearance through which the emulsified fuel must flow ultimately depends on throttle position.

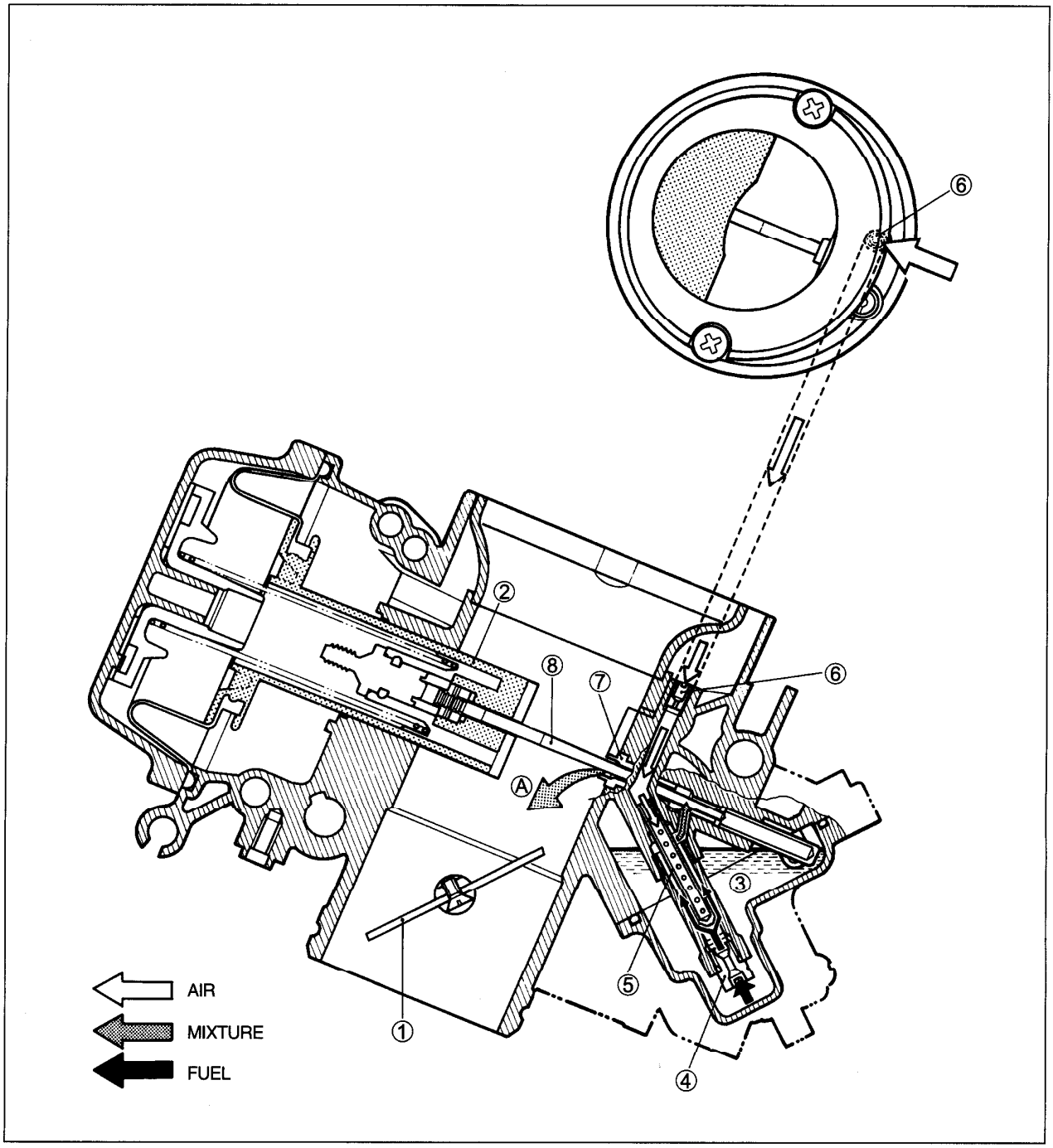

STARTER (ENRICHER) SYSTEM

Pulling the starter (enricher) plunger ① causes fuel to be drawn into the starter circuit from the float chamber ②.
The starter jet ③ meters this fuel. The fuel then flows into the fuel pipe ④ and mixes with the air coming from the float chamber ②. The mixture, rich in fuel, reaches starter plunger ① and mixes again with the air coming through starter air jet ⑥ from the diaphragm chamber.
The three successive mixings of the fuel with the air provided the proper fuel/air mixture for starting. This occurs when the mixture is sprayed through the starter outlet port ⑤ into the main bore.

NOTE:
A starter (enricher) system is operated almost the same way as a choke.

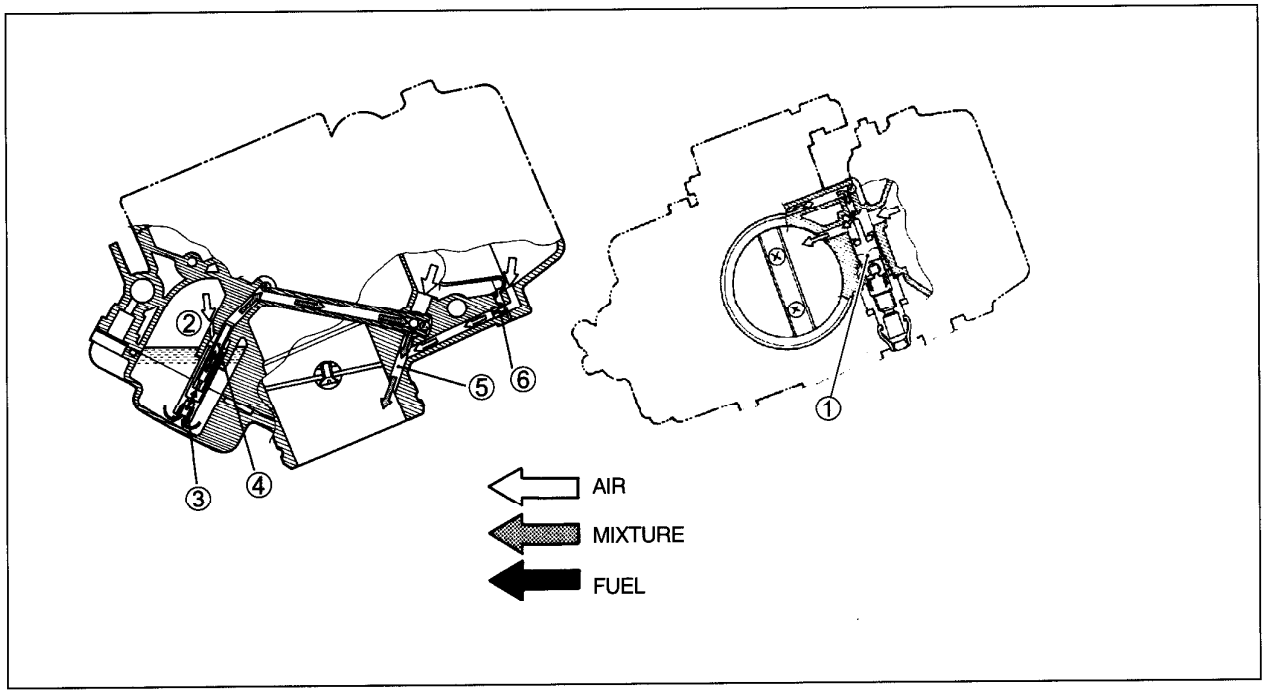

FLOAT SYSTEM

The float ① and needle valve ② work in conjunction with one another. As the float ① moves up and down, so does the needle valve ②.
When there is a high fuel level in float chamber ③, the float ① rises and the needle valve ② pushes up against the valve seat. When this occurs, no fuel enters the float chamber ③.
As the fuel level falls, the float ① lowers and the needle valve ② unseats itself; admitting fuel into the float chamber ③.
In this manner, the needle valve ② admits and shuts off fuel to maintain the appropriate fuel level inside the float chamber ③.

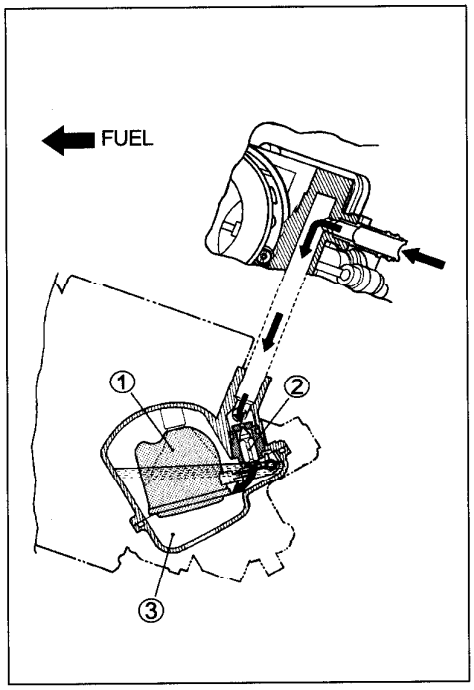

CARBURETOR

REMOVAL

- Lift and support the fuel tank.
- Loosen the carburetor clamp screws at the air cleaner box side.

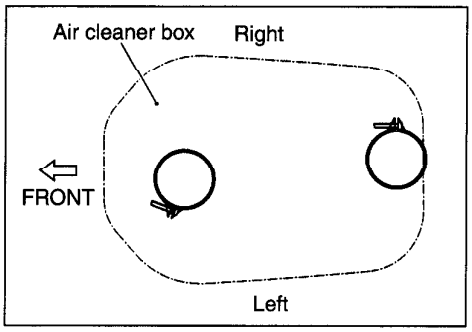

- Disconnect the cylinder breather hose ① and the crankcase breather hose ②.
- Remove the air cleaner with the oil catch tank and the drain hose.

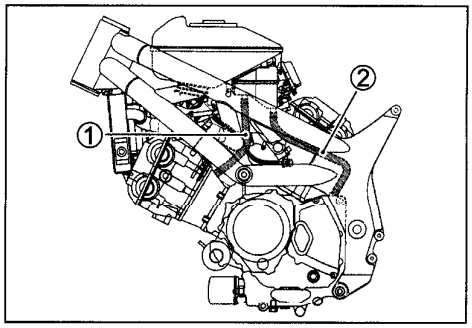

- Disconnect the vacuum hose ③ (for vacuum fuel valve).

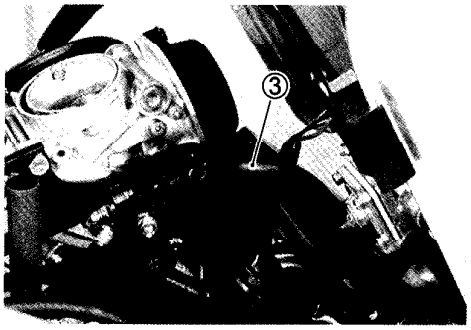

- Disconnect the fuel hose ④.
- Disconnect the throttle position sensor coupler.

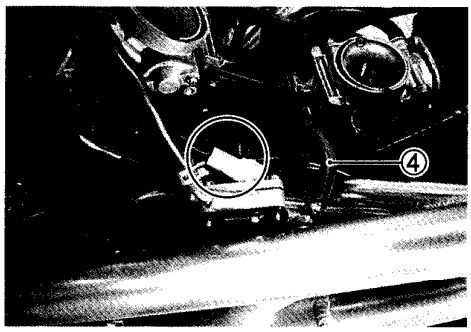

- Remove the starter (enricher) plunger ⑤ from the carburetor (rear side).

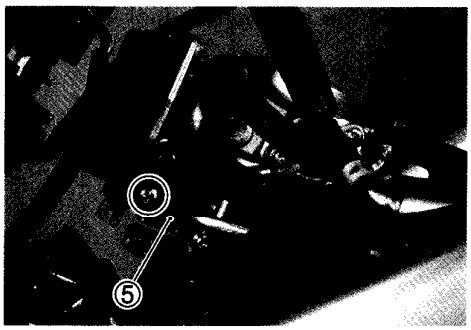

- Disconnect the throttle stop screw ①.

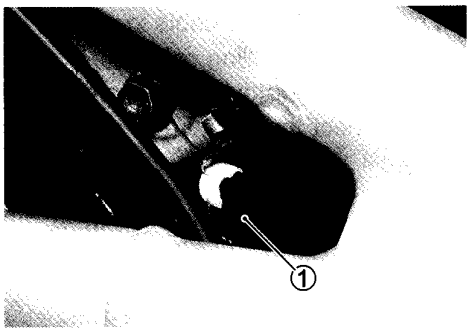

- Loosen the carburetor clamp screws.

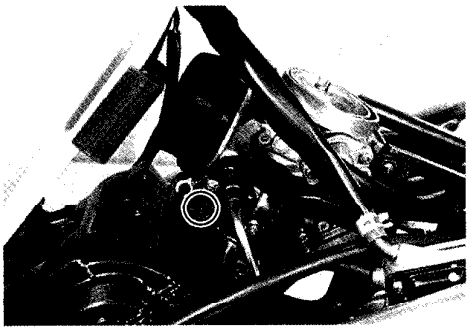

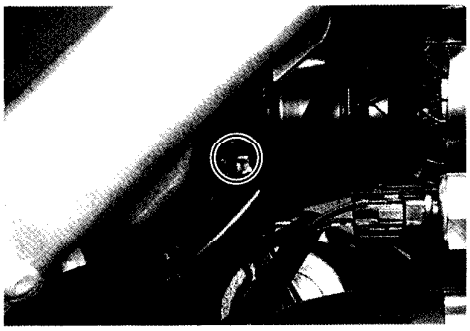

- Remove the starter (enricher) plunger ② from the carburetor (front side).

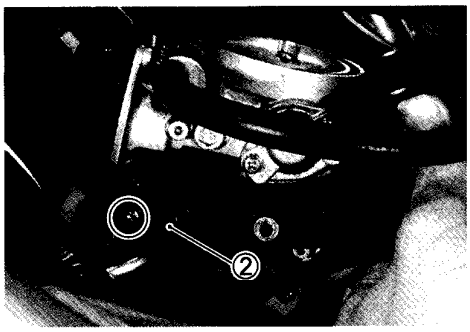

- Loosen the throttle cable lock nuts, ① and ②, on the returning cable ③ and pulling cable ④.
- Disconnect the throttle cable ③ and pulling cable ④.
- Disconnect the vacuum hose ⑤ (for fuel pump).

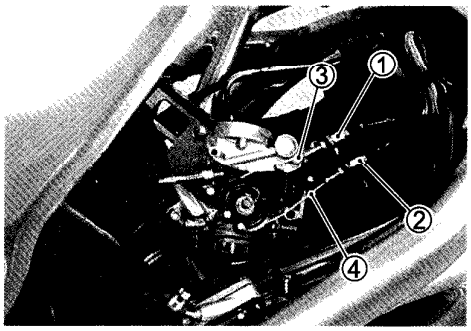

- Remove the carburetor assembly.

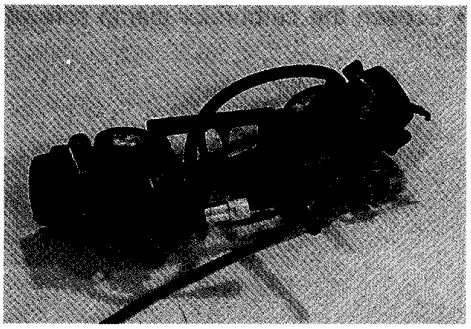

DISASSEMBLY

Before disassembly, prepare a clean and well lit work place where carburetor components can be laid out neatly and will not get lost. Study the service manual carburetor diagram and familiarize yourself with component locations and the different fuel circuits and their routing through the carburetor.

⚠ CAUTION

Prior to disassembly, mark with a paint or notch the initial position of the throttle sensor which is PRE-SET accurately at the factory.
Avoid removing the throttle position sensor from the carburetor body unless you really need to do so.

- Remove the throttle position sensor ①.
- Remove the throttle stop screw ②.

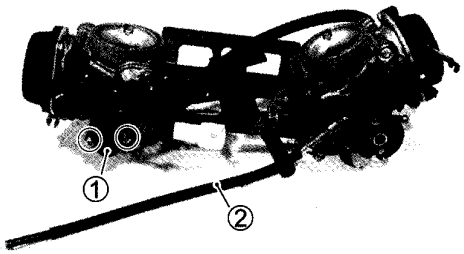

- Remove the carburetor link plate (R) ① by removing the fitting screws and bolts.

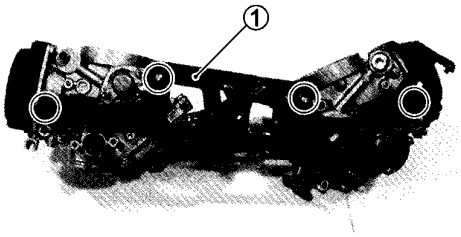

- Remove the carburetor link plate (L) ② by removing the fitting screws.

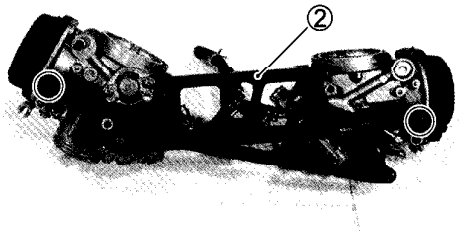

- Remove the cotter pins and washers.
- Remove the throttle link plate ③.

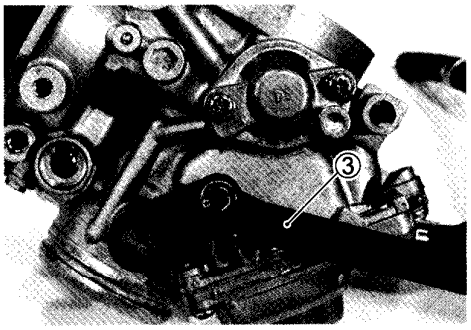

- Disconnect the fuel hoses.
- Separate the carburetor assembly.

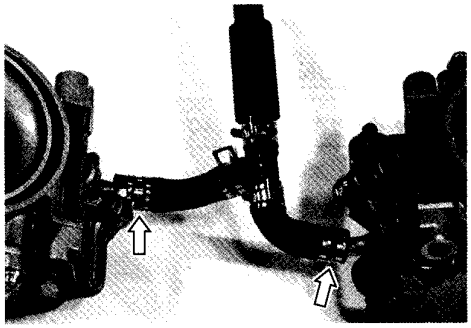

- Remove the carburetor top cap ①.

▲ CAUTION

Do not use compressed air on the carburetor body, before removing the diaphragm; this may damage the diaphragm.

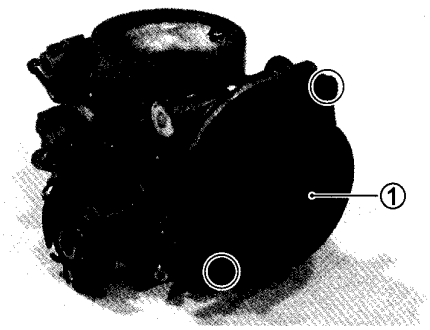

- Remove the spring ② and the piston valve along with its diaphragm ③.
- Remove the O-ring ④.

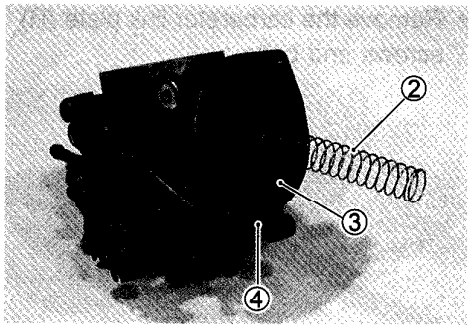

- Remove the jet needle from the piston valve.

⑤ Piston valve
⑥ Jet needle
⑦ Ring
⑧ E-ring
⑨ Washer
⑩ Spring
⑪ O-ring
⑫ Jet needle holder

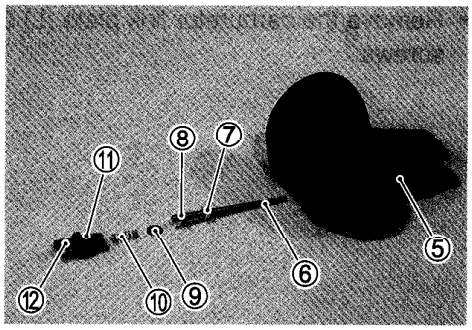

- Remove the float chamber ①.

TOOL 09900-09004: Impact driver set

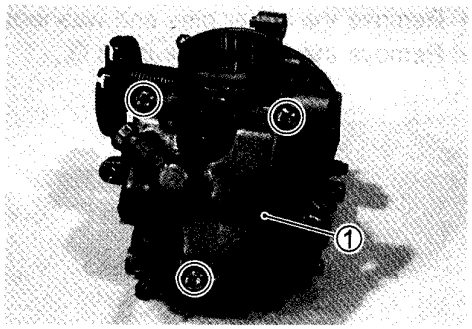

- Remove the O-ring ②.

▲ CAUTION

Use a new O-ring to prevent fuel leakage.

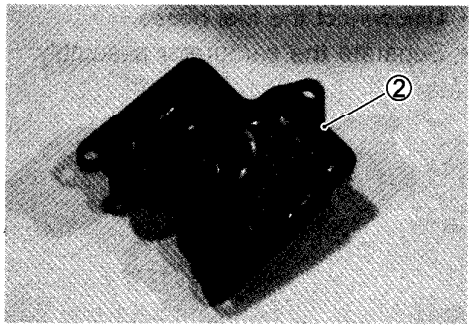

- Remove the float ① and needle valve ② by removing the float pin.

▲ CAUTION

Do not use a wire to clean the valve seat.

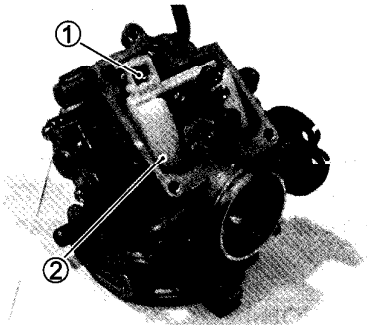

- Remove the main jet ⑤, main jet holder ④, valve seat ③ and pilot jet ⑥.

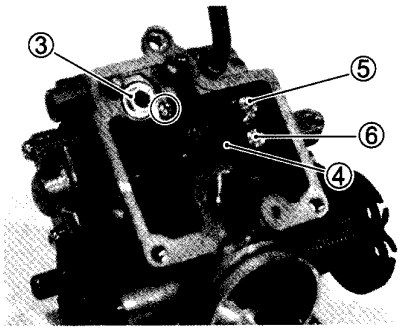

- Remove the fuel filter ⑦.

③ Valve seat
④ Main jet holder
⑤ Main jet
⑥ Pilot jet
⑦ Filter

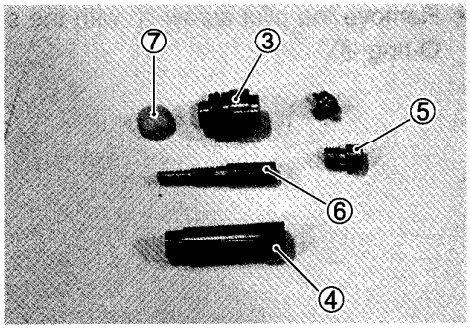

- Use a 1/8" size drill bit with a drill-stop to remove the pilot screw plug. Set the drill-stop 6 mm from the end of the bit to prevent drilling into the pilot screw. Carefully drill through the plug.
  Thread a self-tapping sheet metal screw into the plug. Pull on the screw head with pliers to remove the plug. Carefully clean any metal shavings from the area. (For E-03, 18 and 33 models)

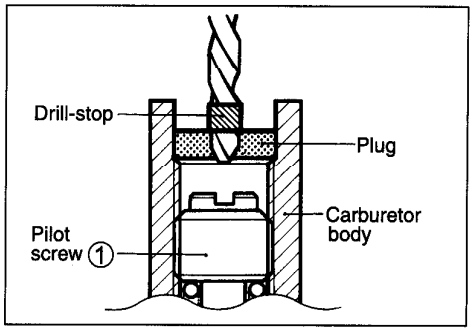

▲ CAUTION

Replace the plug with a new one.

- Slowly turn the pilot screw ① in clockwise and count the number of turns until the screw is lightly seated. Make a note of how many turns were made so the screw can be reset correctly after cleaning.

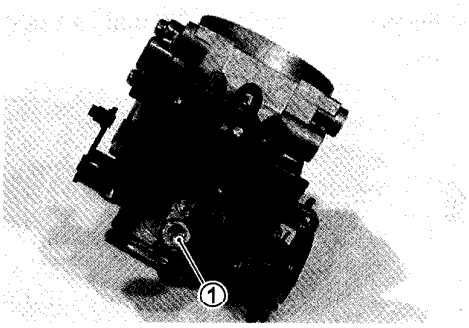

- Remove the pilot screw ① with the spring ②, washer ③, and O-ring ④.

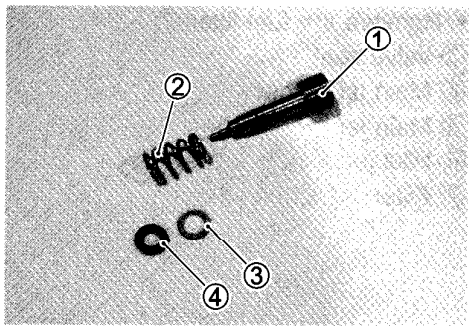

- Remove the funnel ⑤.

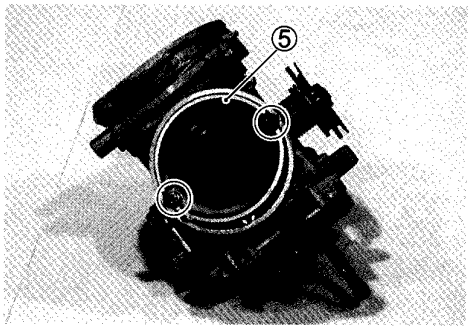

- Remove the pilot air jets ⑥.

▲ CAUTION

Do not use a wire for cleaning the passage and jets.

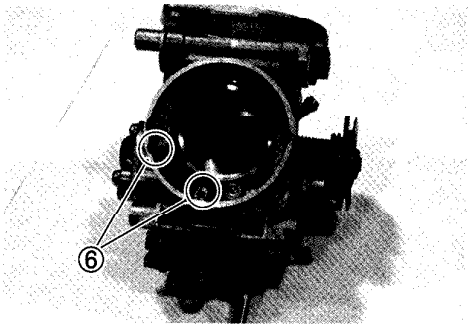

- Remove the coasting valve cover.

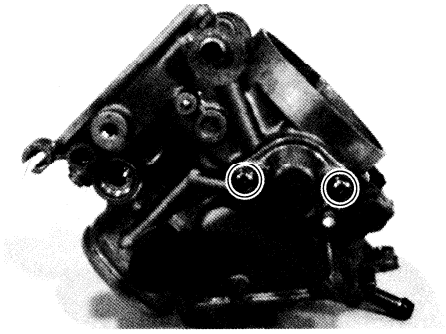

- Remove the coasting valve ① and the spring ②.

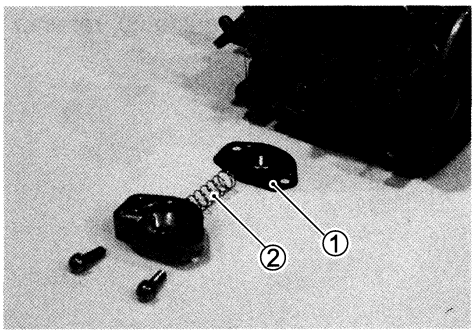

- Compress the spring ①.
- Disconnect the starter (enricher) plunger ②.

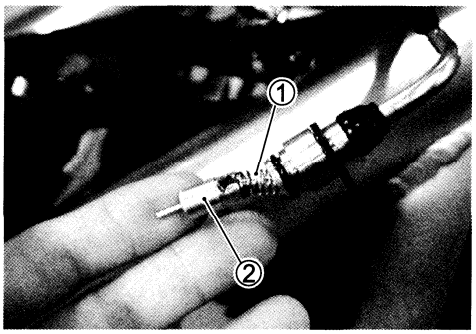

- Remove the cable guide ③, retainer ④ and cap ⑤.

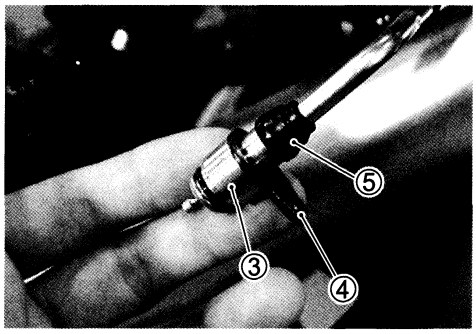

- Remove the O-ring ⑥.

① Spring
② Starter (enricher) plunger
③ Cable guide
④ Retainer
⑤ Cap
⑥ O-ring

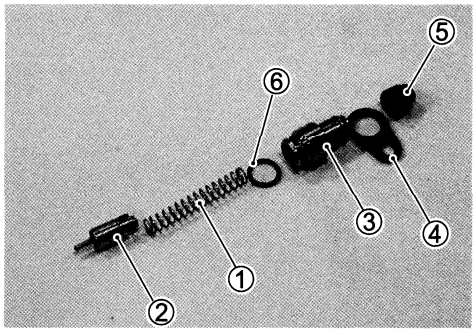

▲ CAUTION

Use a new O-ring to prevent fuel leakage.

CARBURETOR CLEANING

⚠ WARNING

Some carburetor cleaning chemicals, especially dip-type soaking solutions, are very corrosive and must be handled carefully. Always follow the chemical manufacturer's instructions on proper use, handling and storage.

- Clean all jets with a spray-type carburetor cleaner and dry them using compressed air.
- Clean all circuits of the carburetor thoroughly - not just the perceived problem area. Clean the circuits in the carburetor body with a spray-type cleaner and allow each circuit to soak if necessary to loosen dirt and varnish. Blow the body dry using compressed air.

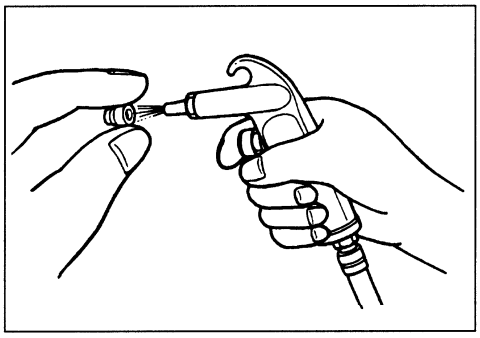

⚠ CAUTION

Do not use a wire to clean the jets or passageways. A wire can damage the jets and passageways. If the components cannot be cleaned with a spray cleaner, it may be necessary to use a dip-type cleaning solution and allow them to soak. Always follow the chemical manufacturer's instructions for proper use and cleaning on the carburetor components.

- After cleaning, reassemble the carburetor with new seals and gaskets.

CARBURETOR INSPECTION

Check the following items for any damage or clogging.

*Pilot jet
*Main jet
*Main air jet
*Pilot air jets
*Needle jet air bleeding hole
*Float
*Needle valve
*Jet needle
*Valve seat
*Piston valve
*Starter (enricher) jet
*Gasket and O-ring
*Throttle shaft oil seal
*Pilot outlet and by-pass ports
*Coasting valve

NEEDLE VALVE INSPECTION

If foreign matter is caught between the valve seat and the needle valve, the gasoline will continue flowing and overflow. If the valve seat and needle valve are worn beyond the permissible limits, similar trouble will occur. Conversely, if the needle valve sticks, the gasoline will not flow into the float chamber. Clean the float chamber and float parts with gasoline. If the needle valve is worn, as shown in the illustration, replace it along with a new valve seat. Clean the fuel passage of the mixing chamber using compressed air.

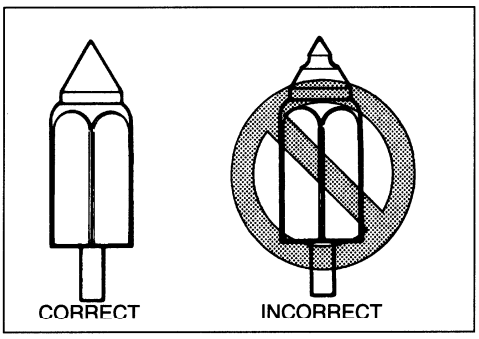

FUEL FILTER INSPECTION

If the fuel filter is dirty with sediment or rust, fuel will not flow smoothly and loss in engine power may result. Clean the fuel filter with compressed air.

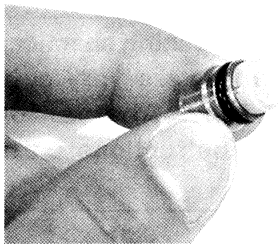

FLOAT HEIGHT ADJUSTMENT

- Measure the float height Ⓐ by using a calipers with the carburetor slanting at an angle of 45° (as shown in the right illustration) and the float arm just contacting the needle valve.
- Bend the tongue Ⓑ of the float arm as necessary to bring the height Ⓐ to the specified value.

DATA Float height Ⓐ: 7.0 ± 0.5 mm (0.28 ± 0.02 in)

TOOL 09900-20102: Vernier calipers

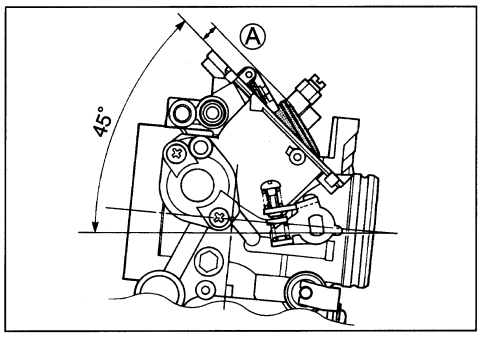

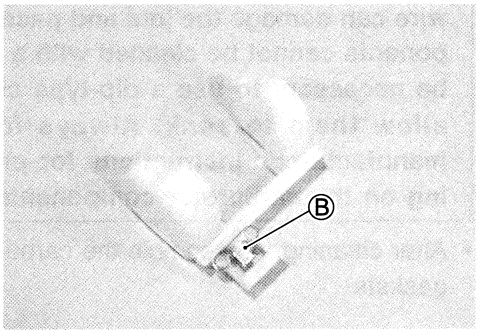

THROTTLE POSITION SENSOR INSPECTION

Using a tester, measure the resistance between the terminals as shown in the right illustration.

DATA Throttle position sensor resistance: 3.5 – 6.5 kΩ

NOTE:
When making above test, it is not necessary to remove the throttle position sensor.

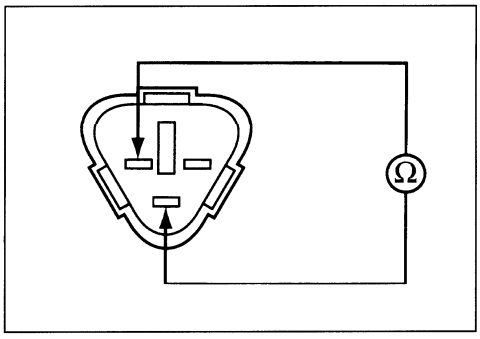

CARBURETOR HEATER INSPECTION (ONLY FOR E-02 MODEL)

Check the carburetor heater, which requires following two inspection:

- Disconnect each lead wire going into the respective carburetor heaters.

1. Check each heater coil for open and ohmic resistance with the multi circuit tester.
   The coil is in good condition if the resistance is as follows.

NOTE:
When making this test, be sure that the carburetor heater is in a cold condition.

TOOL 09900-25008: Multi circuit tester set

Tester knob indication: Resistance (Ω)

DATA Heater coil resistance
Standard: 12–18 Ω

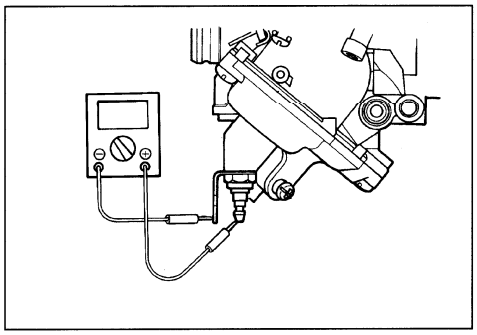

2. Connect 12V battery to the carburetor heater terminals and check the carburetor float chamber temperature with your hand which is warmed up after 5 minutes. If the carburetor float chamber temperature heater with a new one.

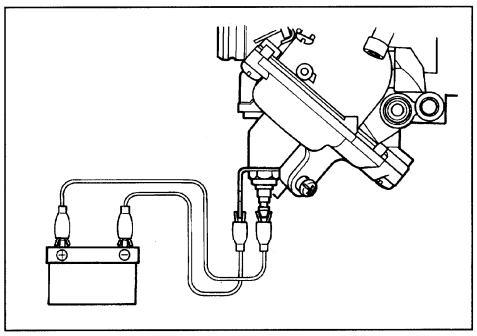

⚠ WARNING

Do not touch the carburetor heater directly to prevent burn.

CARBURETOR THERMO-SWITCH INSPECTION (ONLY FOR E-02 MODEL)

Check the thermo-switch in the following procedure.

- Immerse the thermo-switch in ice contained in a pan and wait about few minutes, then check the continuity between the lead wires of the thermo-switch with the multi circuit tester.
  If there is no continuity, replace the thermo-switch with a new one.

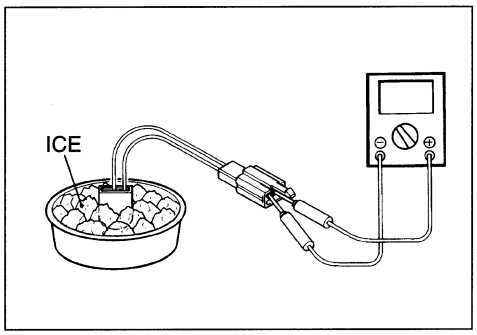

TOOL 09900-25008: Multi circuit tester set

Tester knob indication: Continuity test (•))))

REASSEMBLY AND REMOUNTING

Reassemble and remount the carburetors in the reverse order of disassembly and removal. Pay attention to the following points:

CARBURETOR HEATER (ONLY FOR E-02 MODEL)

- Before installing the carburetor heater, apply a small quantity of THERMO-GREASE to the carburetor heater and tighten it to the specified torque.

99000-59029: THERMO-GREASE

Carburetor heater: 3 N·m (0.3 kgf·m, 2.0 lb-ft)

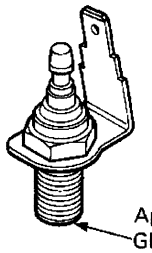

COASTING VALVE

- When installing the coasting valve to the body, align the hole Ⓐ of the diagram and air hole Ⓑ of the cover.

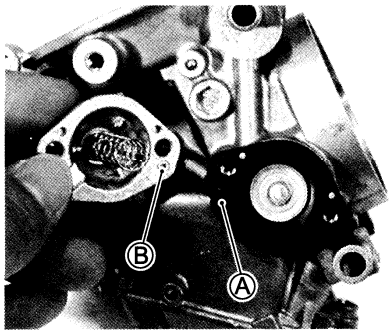

FUNNEL

- Apply a small quantity of THREAD LOCK "1342" to the funnel stopper screws and tighten them.

1342 99000-32050: THREAD LOCK "1342"

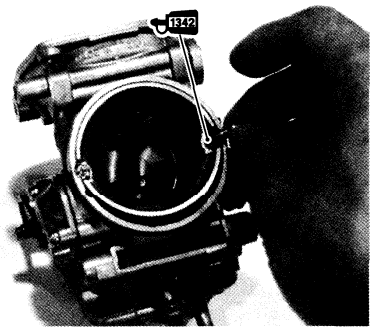

PILOT SCREW

- After cleaning, reinstall the pilot screw to the original setting by turning the screw in until it lightly seats, and then backing it out the same number of turns counted during disassembly.
- Install new plug ① by tapping it into place with a punch. (For E-03,18 and 33 models)

⚠ CAUTION

Replace the O-ring with a new one.

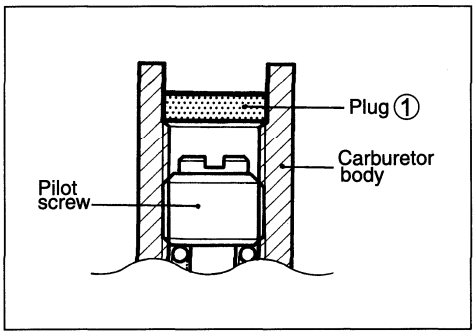

CARBURETOR TOP CAP

- Before installing the carburetor top cap, install the O-ring ②.
- Align the protrusion Ⓒ of the carburetor top cap with the O-ring ②.

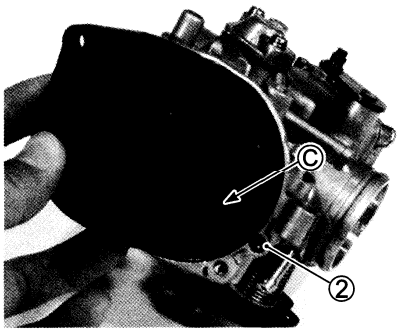

- Pass the fuel hoses through the center hole of carburetor link plate (R).
- Connect the fuel hoses.

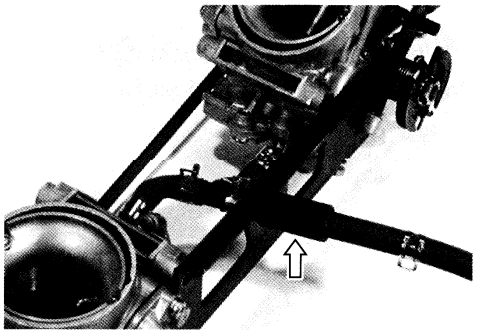

- Tighten the screws after tightening the bolts.

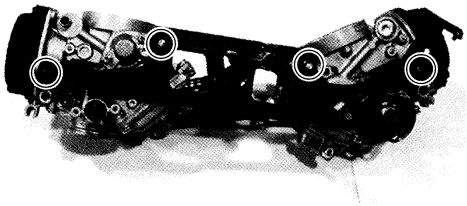

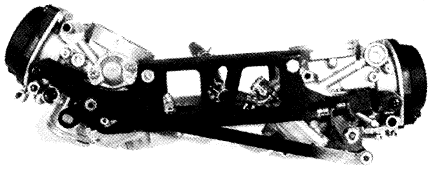

- Connect the throttle link plate with new cotter pins.

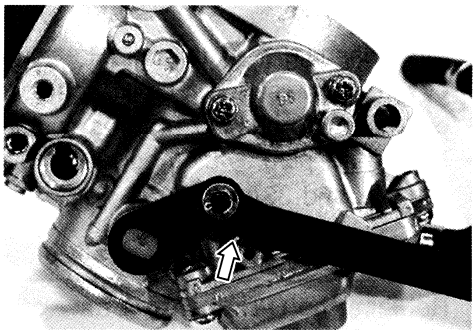

- Pass through the carburetor air vent hoses as shown in the right picture.

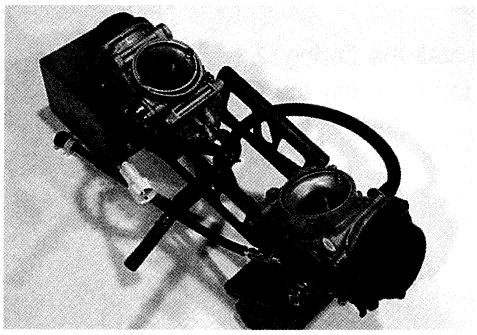

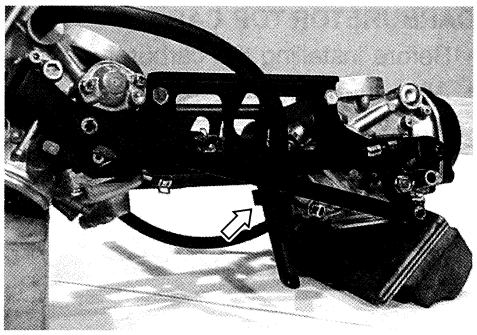

- When installing the starter (enricher) plunger, replace the O-ring with a new one and apply a small quantity of grease to it.

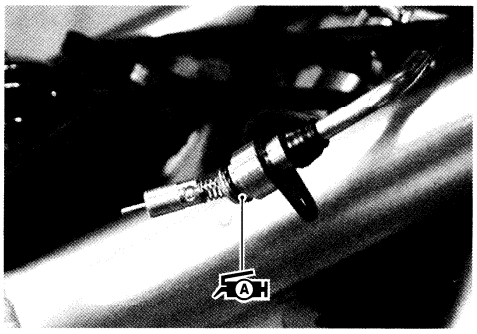

THROTTLE POSITION SENSOR POSITIONING

When removing the throttle position sensor from the carburetor body, install it to the exact position mentioned below;

- Measure the resistance Ω1 between terminals of the throttle position sensor as shown in the right illustration.

DATA Throttle position sensor resistance Ω1: 3.5 – 6.5 kΩ

- Measure the resistance Ω2 between terminals of the throttle position sensor as shown in the right illustration.
- Open the throttle valve fully by turning the throttle lever.
- Under above condition, see the throttle position sensor angle to have the resistance Ω2 as 78% of the resistance Ω1.

DATA For example: When Ω1 is 5 kΩ, Ω2 should be 3.9 kΩ.

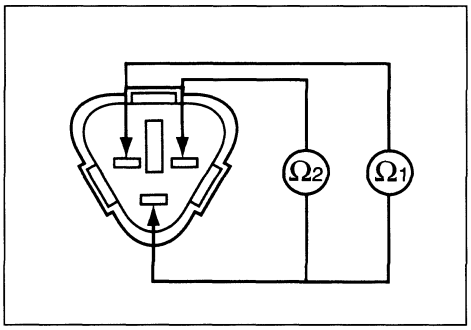

- When reading the above-mentioned resistance as Ω2, tighten the throttle position sensor mounting screws to the specified torque.

Throttle position sensor mounting screw:
3.5 N·m (0.35 kgf·m, 2.5 lb-ft)

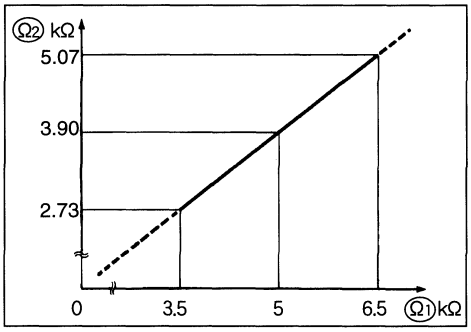

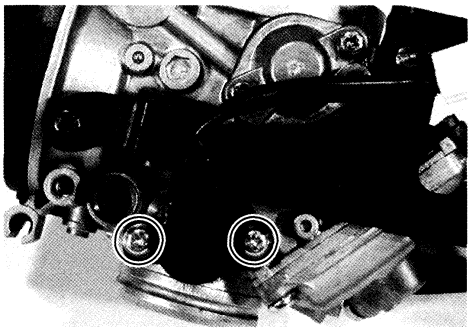

CARBURETOR CLAMPS

Locate the carburetor clamps as shown in the right illustrations. (☞ 8-18)

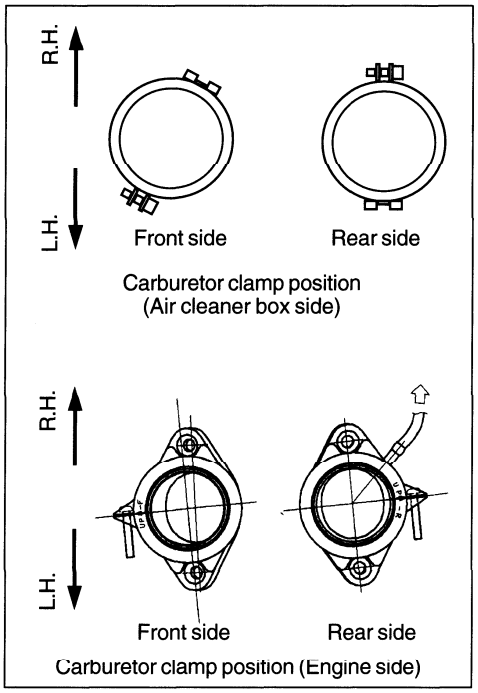

- After all of the work has been completed, install the carburetor assembly onto the engine and perform the following adjustments.

* Engine idle speed ..... ☞ 2-15
* Throttle cable play ..... ☞ 2-16
* Carburetor synchronization ..... ☞ 4-35 to -37

CARBURETOR SYNCHRONIZATION

Check and adjust the carburetor synchronization between the two carburetors as follows.

NOTE:
Keep the air cleaner box removing while performing this procedure.

CALIBRATING EACH GAUGE

- Lift and support the fuel tank with its prop stay. (☞ 4-4 and -5)
- Start up the engine and run it in idling condition for warming up.
- Stop the warmed-up engine.
- Remove the air cleaner box. (☞ 4-9)
- Disconnect the vacuum hose (for vacuum fuel valve) ① from the carburetor (rear side).
- Connect the vacuum pump gauge to the vacuum port of the vacuum fuel valve. Apply negative pressure to the fuel valve.

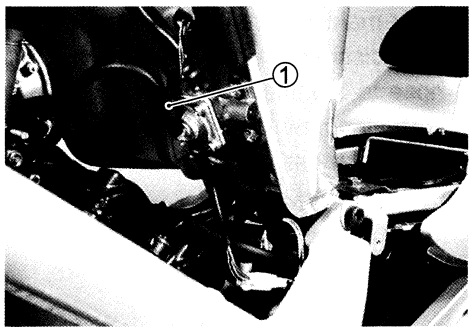

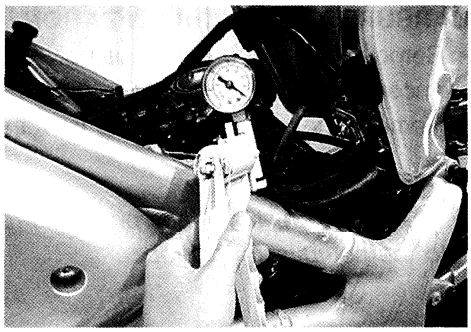

DATA Negative pressure: 6.8 – 13.6 kPa
(0.068 – 0.136 kgf/cm², 0.97 – 1.93 psi)

- Connect one of the four rubber hoses of carburetor balancer gauge to this inlet.

TOOL 09913-13121: Carburetor balancer

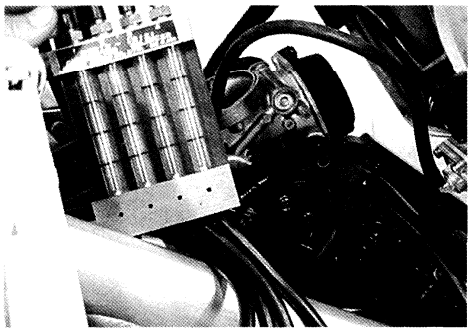

- Start up the engine and keep it running at 1 300 r/min by turning throttle stop screw ②.

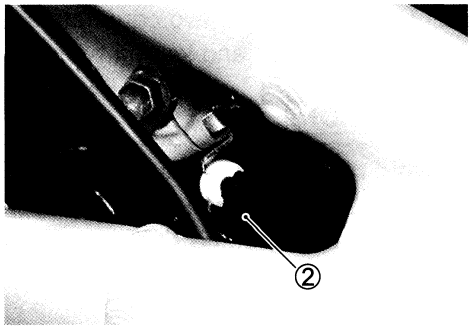

▲ CAUTION

Avoid drawing dirt into the carburetor while running the engine without air cleaner box. Dirt drawn into the carburetor will damage the internal engine parts.

- Turn the air screw ① of the gauge so that the vacuum acting on the tube of that hose will bring the steel ball ② in the tube to the center line ③.

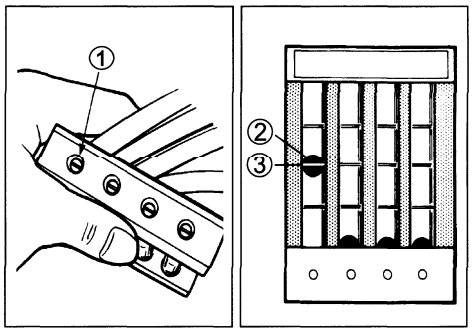

- After making sure that the steel ball stays steady at the center line, disconnect the hose from nipple and connect the next hose to the inlet.
- Turn air screw to bring the other steel ball ④ to the center line.
- The balancer gauge is now ready for use in balancing the carburetors.

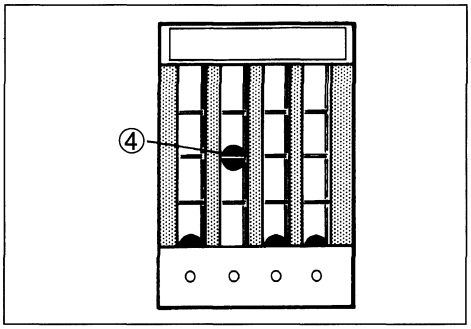

CARBURETOR SYNCHRONIZATION

- Remove the carburetor assembly to connect carburetor balancer hoses to carburetor vacuum inlets. (☞ 4-18)
- Remove the vacuum inlet cap from the carburetor (front side).

NOTE:
Place a rag over the intake pipes to prevent any parts dropping into the combustion chamber.

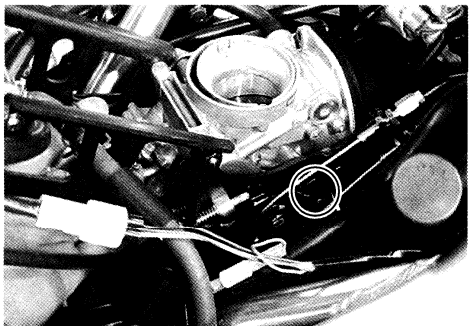

- Connect the balancer gauge hoses to vacuum inlets respectively.
- Install the carburetor assembly properly.

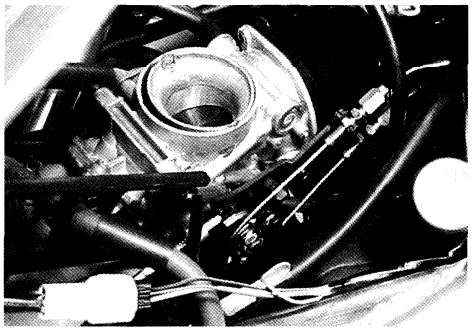

Adjust the balance of two carburetors as follows:

- Start the engine and keep it running at 1 300 r/min.

⚠ CAUTION

Avoid drawing dirt into the carburetor while running the engine without air cleaner box. Dirt drawn into the carburetor will damage the internal engine parts.

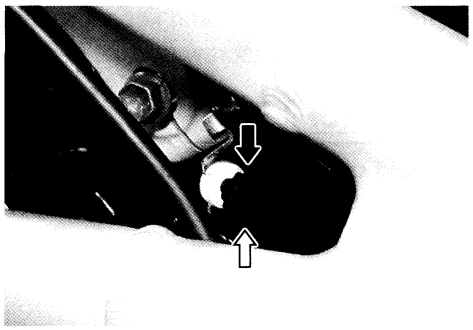

When the steel balls in tubes #1 and #2 are at the same level, the carburetor is correctly adjusted.

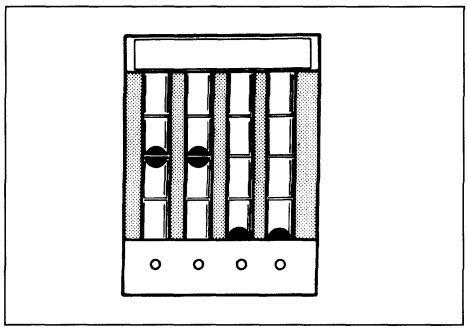

- If the steel balls are not at the same level, adjust the throttle valve synchronizing screws ①.

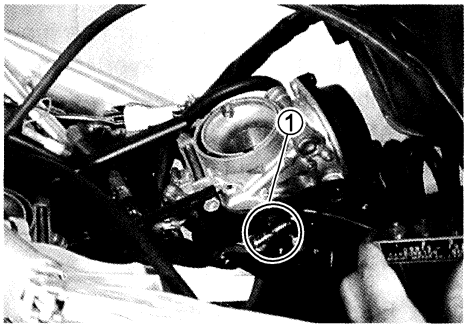

⚠ WARNING

A hot engine can be burn you if you touch the engine. The engine will still be hot for sometime after stopping the engine.

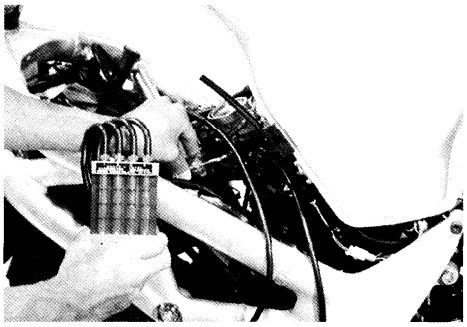

- After completing the carburetor synchronization, remove the carburetor assembly.
- Remove the balancer gauge hose from carburetor inlets and install vacuum hoses respectively.
- Reinstall the carburetor assembly onto the engine and air cleaner box onto the carburetor assembly respectively.
- Connect the fuel hose to fuel pump.

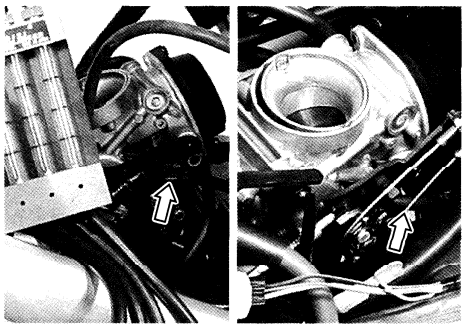

- Adjust the engine idle speed by turning the throttle stop screw.

Engine idle speed
1 300 ± 50 r/min ..... for E-18 model
1 300 ± 100 r/min ..... for the other models

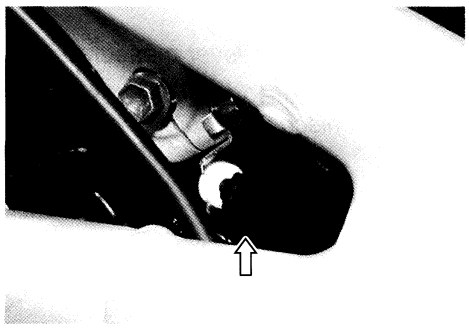

FUEL LEVEL ADJUSTMENT

- Install the special tool to the carburetor drain outlet.
- Loosen the drain bolt ①.

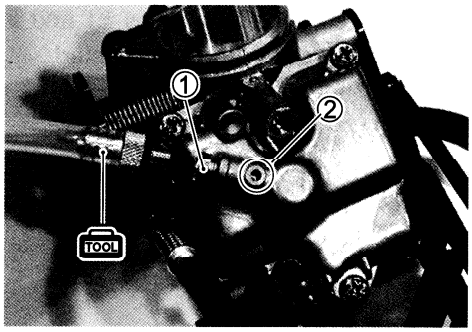

TOOL 09913-10760: Fuel level gauge

- Adjust the carburetor to the proper angle holding the body with a vice or the like.

Carburetor set position	Lateral direction:Horizontal
	Longitudinal direction:22°30'

- Fill gasoline in the carburetor.
- Remove air completely from the fuel level gauge.
- With the level gauge held vertical, lower the gauge slowly and align the datum plane ③ with the gauge graduation. (See illustration below.)
- Wait until the fuel level stabilizes.
- Determine the zero point on the gauge graduation and after waiting again for level stabilization, measure the height from the datum plane.

DATA Fuel level: 16.9 ± 0.5mm (0.68 ± 0.02 in) from datum plane

⚠ WARNING

This inspection must be performed in an area well ventilated, away from fire or sparks since gasoline, an explosive fluid, is used in this operation.

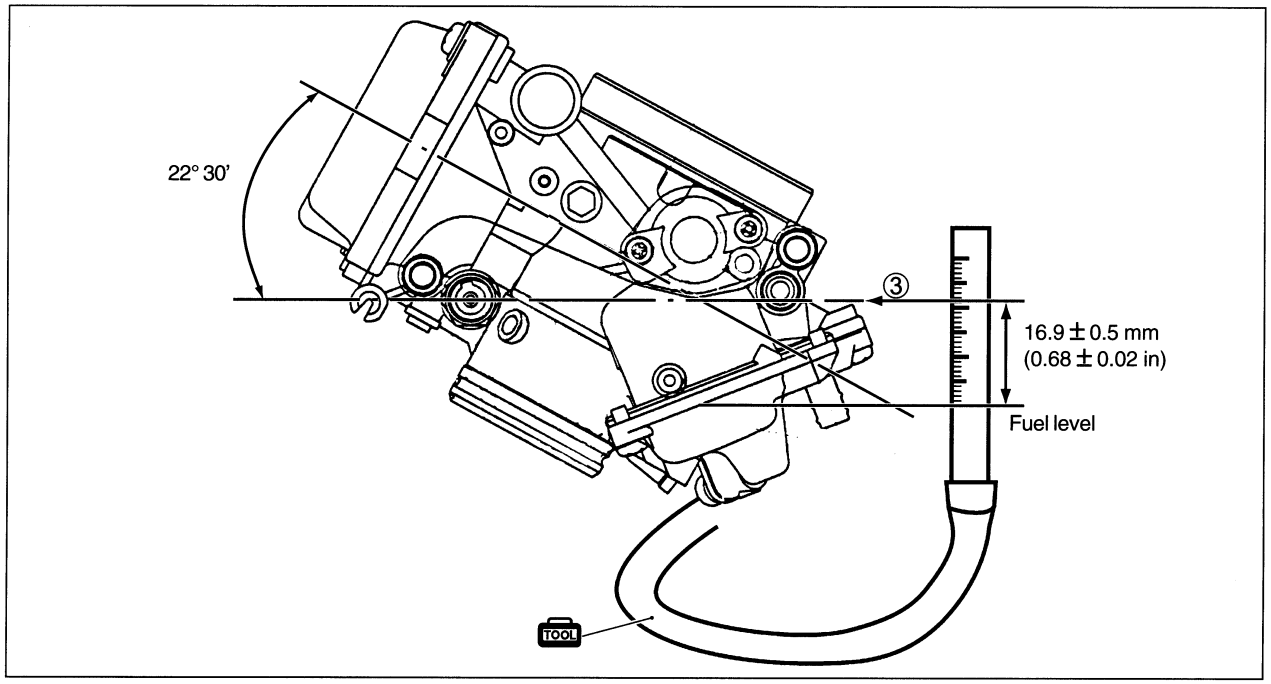

NOTE:
The apparent fuel level measured in the level gauge is higher than the actual level in the float chamber because of meniscus effect. (Meniscus is approximately 1 mm.)

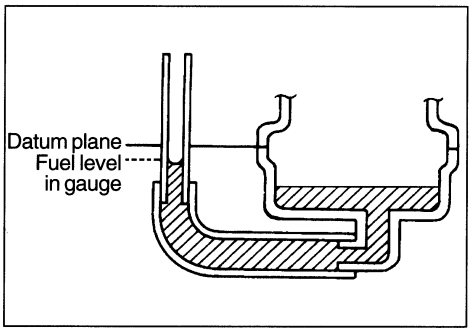

LUBRICATION SYSTEM

OIL PRESSURE

☞ 2-31

OIL FILTER

☞ 2-13

OIL STRAINER

Check to be sure that the oil strainer is free from any sign of rupture, also wash the strainer clean periodically.

ENGINE LUBRICATION SYSTEM CHART

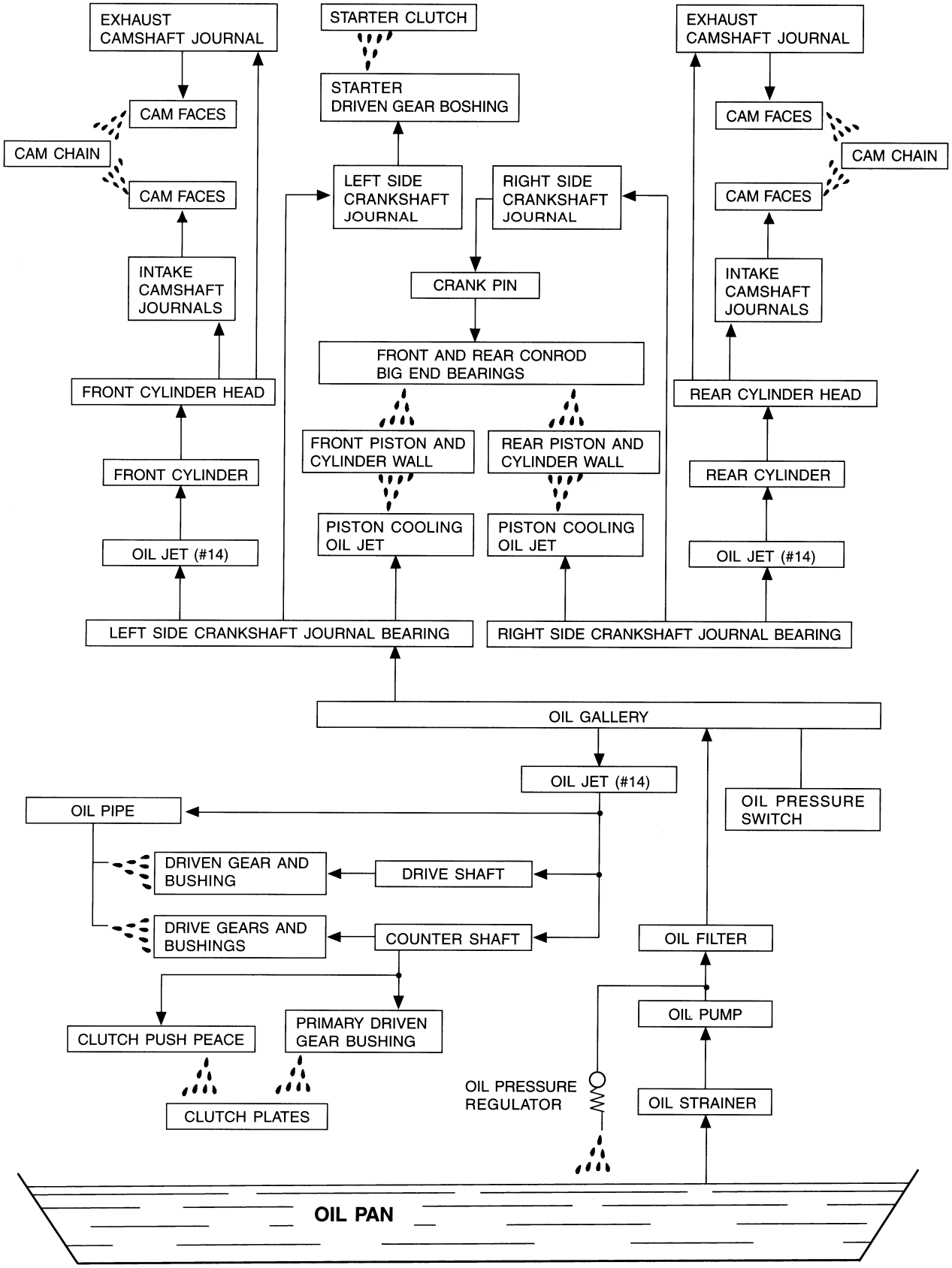

ENGINE LUBRICATION SYSTEM

FRONT CYLINDER

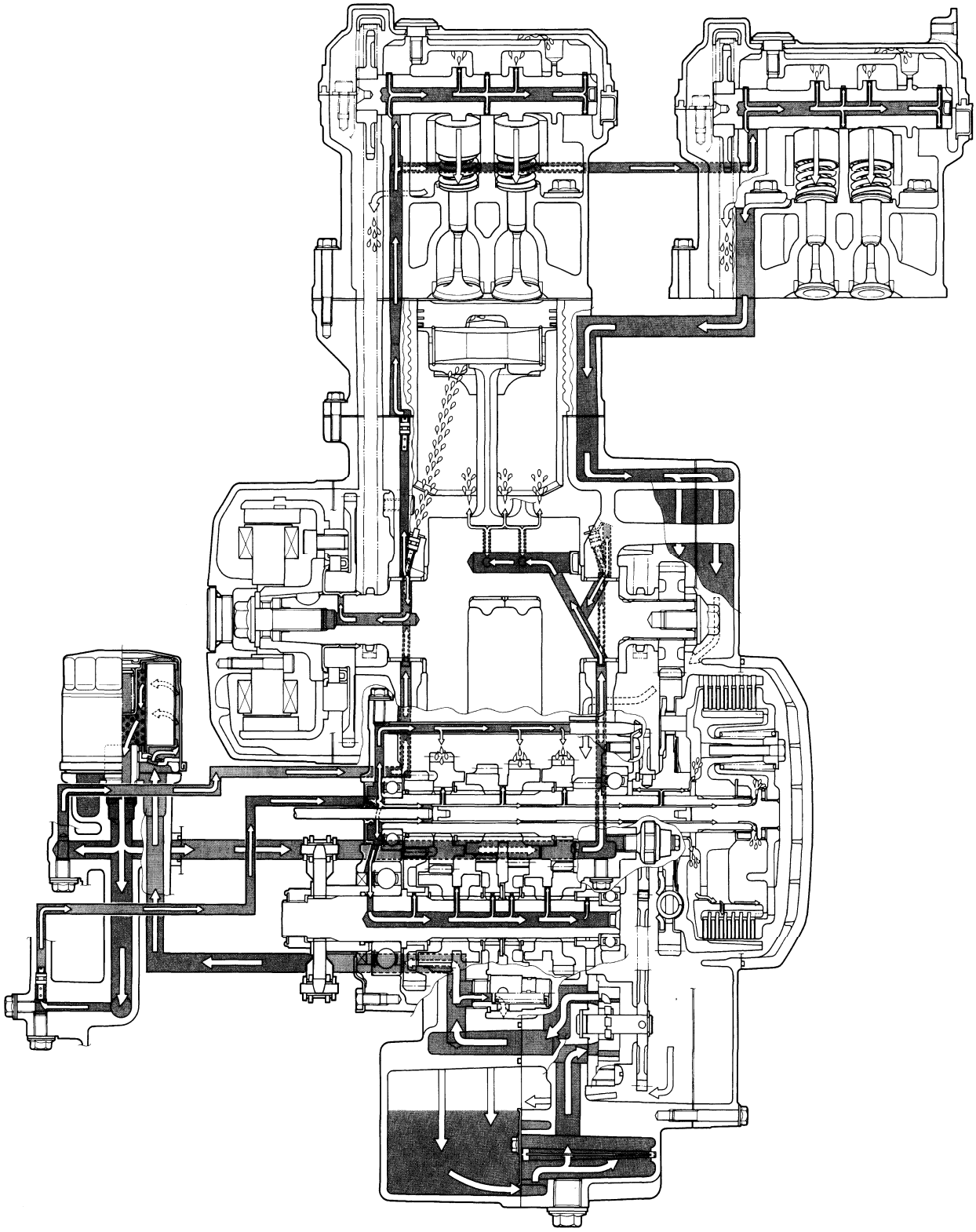

REAR CYLINDER

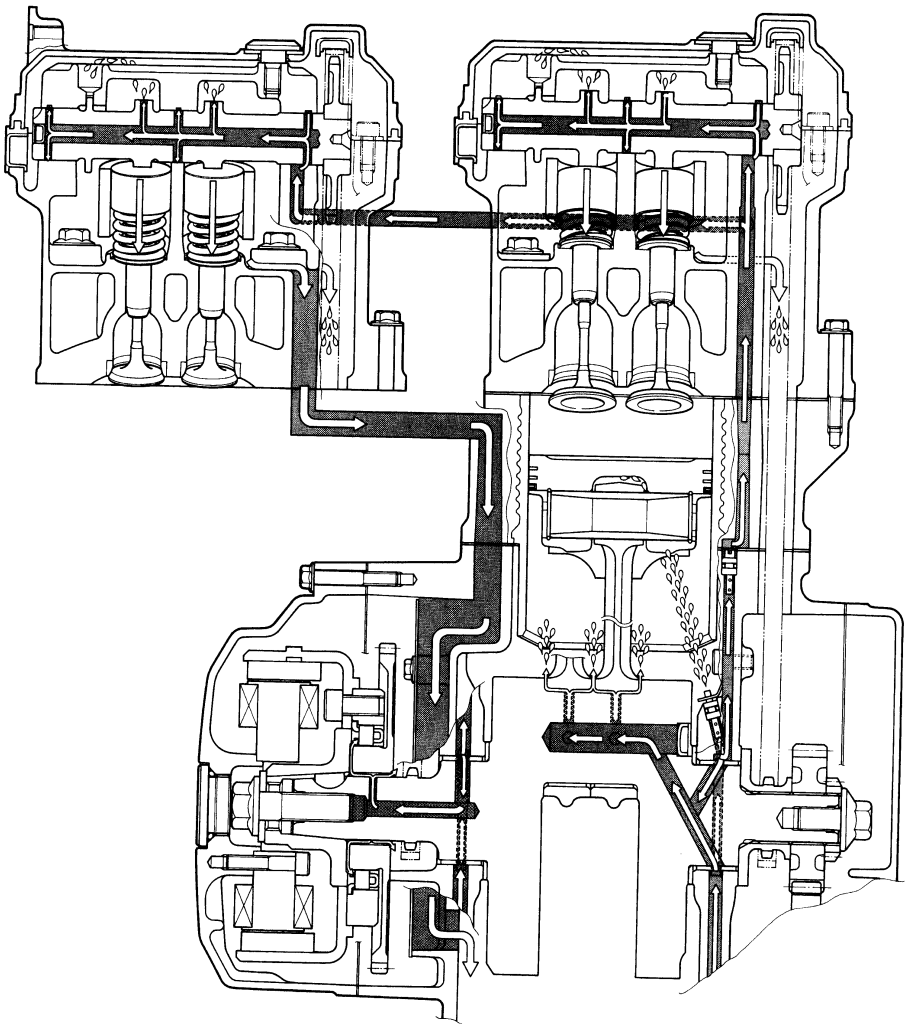

COOLING SYSTEM

CONTENTS

ENGINE COOLANT 5- 2
COOLING CIRCUIT 5- 3
COOLING CIRCUIT INSPECTION 5- 3
RADIATOR AND WATER HOSES 5- 4
RADIATOR REMOVAL 5- 4
RADIATOR CAP INSPECTION 5- 5
RADIATOR INSPECTION AND CLEANING 5- 5
WATER HOSE INSPECTION 5- 5
RADIATOR REMOUNTING 5- 6
COOLING FAN 5- 6
REMOVAL 5- 6
INSPECTION 5- 6
INSTALLATION 5- 6
COOLING FAN THERMO-SWITCH 5- 7
REMOVAL 5- 7
INSPECTION 5- 7
INSTALLATION 5- 7
ENGINE COOLANT TEMPERATURE SWITCH 5- 8
REMOVAL 5- 8
INSPECTION 5- 8
INSTALLATION 5- 9
THERMOSTAT 5- 9
REMOVAL 5- 9
INSPECTION 5-10
INSTALLATION 5-11
WATER PUMP 5-12
REMOVAL AND DISASSEMBLY 5-12
INSPECTION 5-15
REASSEMBLY AND INSTALLATION 5-16

ENGINE COOLANT

At the time of manufacture, the cooling system is filled with a 50:50 mixture of distilled water and ethylene glycol anti-freeze. This 50:50 mixture will provide the optimum corrosion protection and excellent heat protection, and will protect the cooling system from freezing at temperatures above –31°C (–24°F).
If the motorcycle is to be exposed to temperatures below –31°C (–24°F), this mixing ratio should be increased up to 55% or 60% according to the figure.

Anti-freeze density	Freezing point
50%	–30°C (–24°F)
55%	–40°C (–44°F)
60%	–55°C (–67°F)

▲ CAUTION

* **Use a high quality ethylene glycol base anti-freeze, mixed with distilled water. Do not mix an alcohol base anti-freeze and different brands of anti-freeze.**
* **Do not put in more than 60% anti-freeze or less than 50%. (Refer to Right figure.)**
* **Do not use a radiator anti-leak additive.**

50% Engine coolant including reserve tank capacity

Anti-freeze	800 ml (1.7/1.4 US/Imp. pt)
Water	800 ml (1.7/1.4 US/Imp. pt)

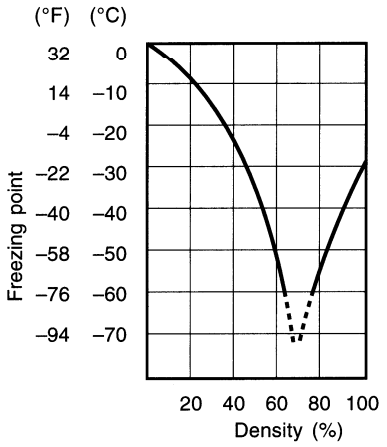

Fig.1 Engine coolant density-freezing point curve.

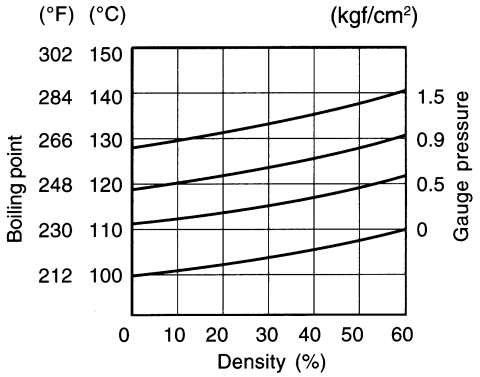

Fig.2 Engine coolant density-boiling point curve.

▲ WARNING

* **You can be injured by scalding fluid or steam if you open the radiator cap when the engine is hot. After the engine cools, wrap a thick cloth around cap and carefully remove the cap by turning it a quarter turn to allow pressure to escape and then turn the cap all the way off.**
* **The engine must be cool before servicing the cooling system.**
* **Coolant is harmful;**
  - **If it comes in contact with skin or eyes, flush with water.**
  - **If swallowed accidentally, induce vomiting and call physician immediately.**
  - **Keep it away from children.**

COOLING CIRCUIT

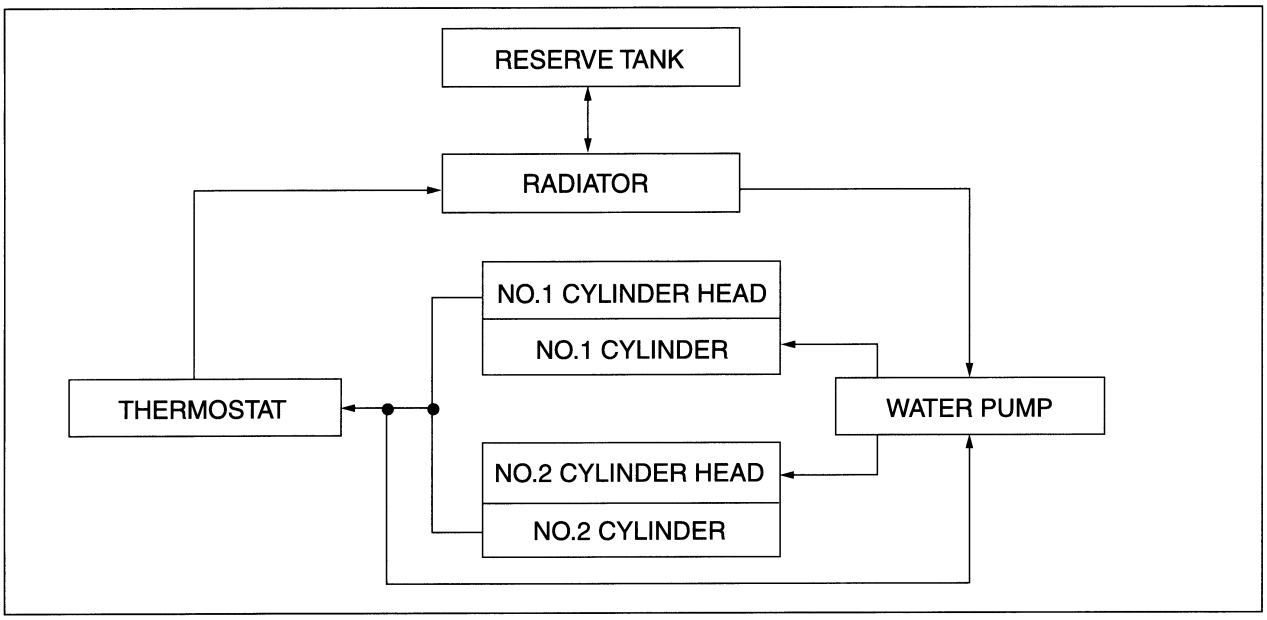

COOLING CIRCUIT INSPECTION

Before removing the radiators and draining the engine coolant, inspect the cooling circuit for tightness.

- Loosen the radiator cap stop screw.
- Remove the radiator cap ① and connect the tester ② to the filler.

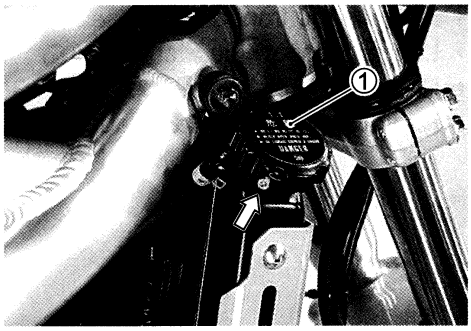

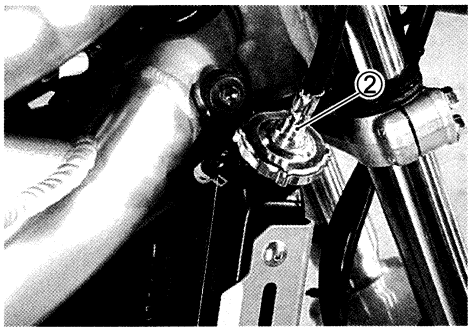

⚠ WARNING

Do not remove the radiator cap when the engine is hot.

- Give a pressure of about 120 kPa (1.2 kgf/cm^2, 17 psi) and see if the system holds this pressure for 10 seconds.
- If the pressure should fall during this 10-second interval, it means that there is a leaking point in the system. In such a case, inspect the entire system and replace the leaking component or part.

⚠ WARNING

When removing the radiator cap tester, put a rag on the filler to prevent spouting of engine coolant.

⚠ CAUTION

Do not allow the pressure to exceed the radiator cap release pressure, or the radiator can be damaged.

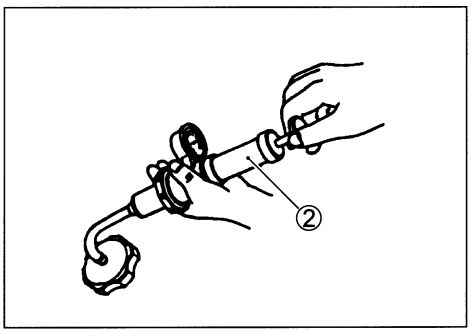

RADIATOR AND WATER HOSES

RADIATOR REMOVAL

- Drain engine coolant. (☞ 2-18)

- Disconnect the horn lead wires.
- Remove the horn ① with the bracket.

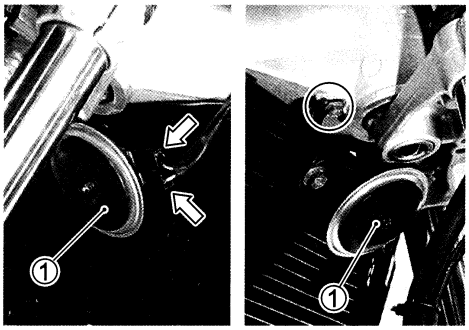

- Remove the front and rear seats. (☞ 6-3)
- Lift and support the fuel tank. (☞ 4-4)
- Remove the air cleaner box. (☞ 3-4)
- Remove the cooling fan lead wire coupler ②.

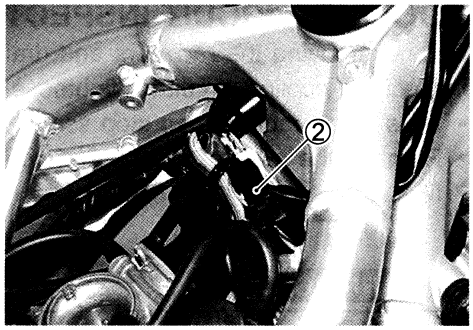

- Disconnect the cooling fan thermo-switch lead wire coupler ③.
- Remove the water hoses ④ and the reserve tank hose ⑤ from the radiator.
- Remove the radiator mounting bolts.
- Remove the radiator.

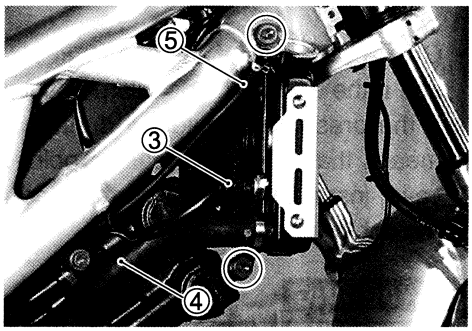

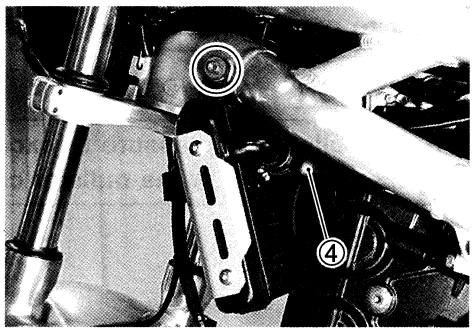

RADIATOR CAP INSPECTION

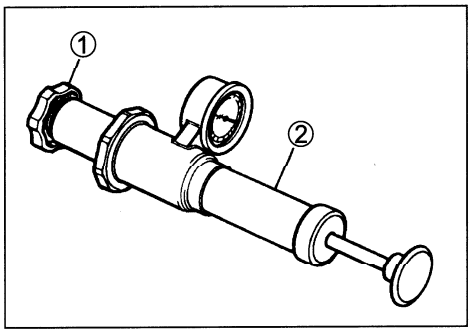

- Fit the cap ① to the radiator cap tester ②.
- Build up pressure slowly by operating the tester. Make sure that the pressure build-up stops at 95 – 125 kPa (0.95 – 1.25 kgf/cm², 13.5 – 17.8 psi) and that, with the tester held stand-still, the cap is capable of holding that pressure for at least 10 seconds.
- Replace the cap if it is found not to satisfy either of these two requirements.

DATA Radiator cap valve opening pressure
Standard: 95 – 125 kPa
(0.95 – 1.25 kgf/cm², 13.5 – 17.8 psi)

RADIATOR INSPECTION AND CLEANING

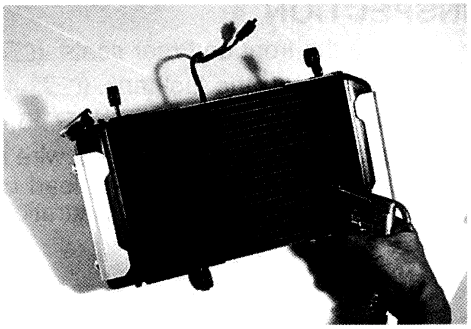

- Road dirt or trash stuck to the fins must be removed.
- Use of compressed air is recommended for this cleaning.
- Fins bent down or dented can be repaired by straightening them with the blade of a small screwdriver.

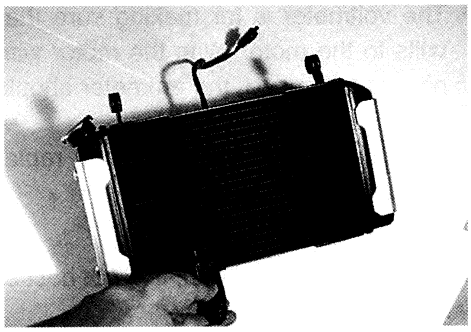

WATER HOSE INSPECTION

- Any water hose found in a cracked condition or flattened must be replaced.
- Any leakage from the connecting section should be corrected by proper tightening.

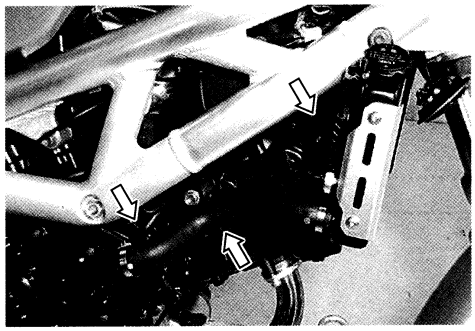

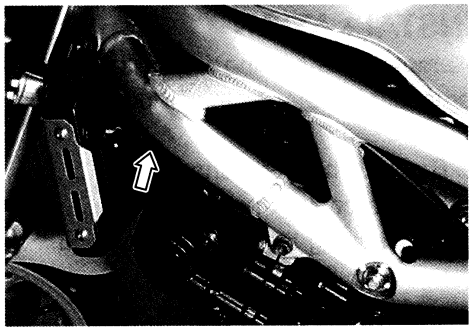

RADIATOR REMOUNTING

Remount the radiator in the reverse order of its removal procedure. Refer to the following pages.

	Page
* Radiator hose routing	8-19
* Engine coolant pouring	2-18
* Air bleeding the cooling circuit	2-19

COOLING FAN

REMOVAL

- Remove the radiator. (☞5-4)
- Remove the cooling fan.

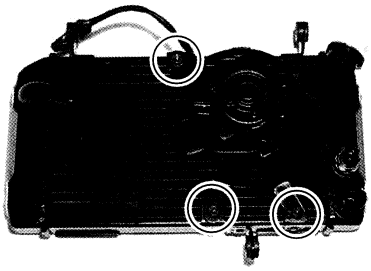

INSPECTION

- Remove the front and rear seats. (☞ 6-3)
- Lift and support the fuel tank. (☞ 4-4)
- Remove the air cleaner box. (☞ 3-4)
- Disconnect the cooling fan lead wire coupler ①.
- Test the cooling fan motor for load current with an ammeter connected as shown in the illustration.

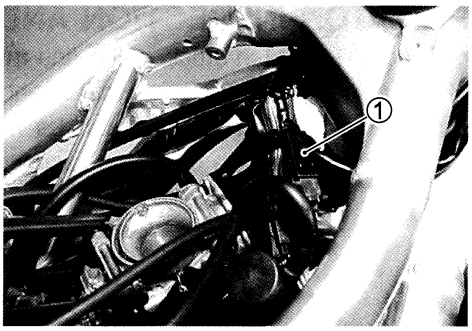

- The voltmeter is for making sure that the battery applies 12 volts to the motor. With the motor with electric motor fan running at full speed, the ammeter should be indicating not more than 5 amperes.
- If the fan motor does not turn, replace the motor assembly with a new one.

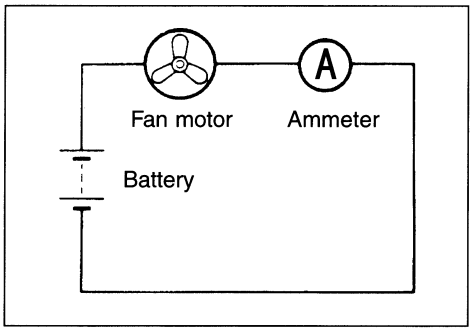

NOTE:
When making above test, it is not necessary to remove the cooling fan.

INSTALLATION

Remount the cooling fan in the reverse order of their removal procedure. Refer to the following pages.

	Page
* Radiator hose routing	8-19
* Engine coolant pouring	2-18
* Air bleeding the cooling circuit	2-19

COOLING FAN THERMO-SWITCH

REMOVAL

- Drain engine coolant. (☞ 2-18)
- Disconnect the cooling fan thermo-switch lead wire coupler.
- Remove the cooling fan thermo-switch ①.

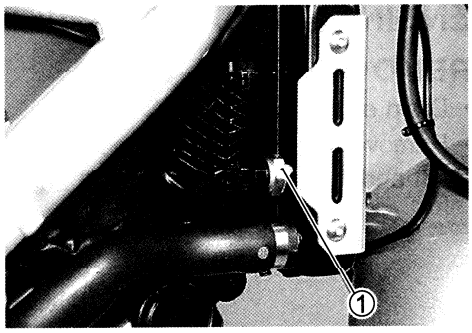

INSPECTION

- Check the thermo-switch closing or opening temperatures by testing it at the bench as shown in the figure. Connect the thermo-switch to a circuit tester and place it in the oil contained in a pan, which is placed on a stove.
- Heat the oil to raise its temperature slowly, and read the column thermometer when the switch closes or opens.

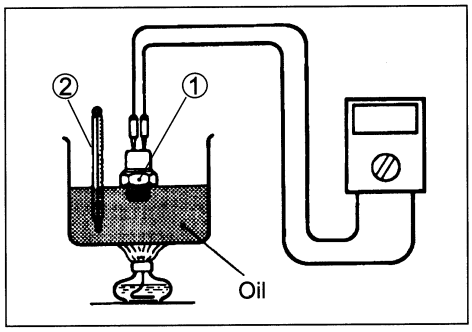

TOOL 09900-25008: Multi circuit tester set

Tester knob indication: Continuity test (•))))

DATA Cooling fan thermo-switch operating temperature
Standard (OFF→ON): Approx. 96°C (204.8°F)
(ON→OFF): Approx. 91°C (195.8°F)

⚠ CAUTION

- **Take special care when handling the thermo-switch. It may cause damage if it gets a sharp impact.**
- **Do not contact the cooling fan thermo-switch ① and the column thermometer ② with a pan.**

INSTALLATION

- Install the O-ring ①.
- Tighten the cooling fan thermo-switch to the specified torque.

Cooling fan thermo-switch: 13 N·m (1.3 kgf·m, 9.5 lb-ft)

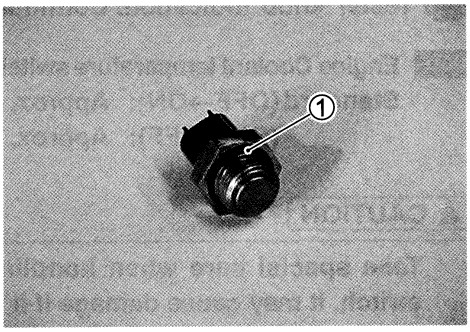

- Pour engine coolant. (☞ 2-18)

ENGINE COOLANT TEMPERATURE SWITCH

REMOVAL

- Drain engine coolant. (☞ 2-18)
- Remove the front and rear seats. (☞ 6-3)
- Lift and support the fuel tank. (☞ 4-4)

- Disconnect the engine coolant temperature switch lead wire.
- Remove the engine coolant temperature switch ①.

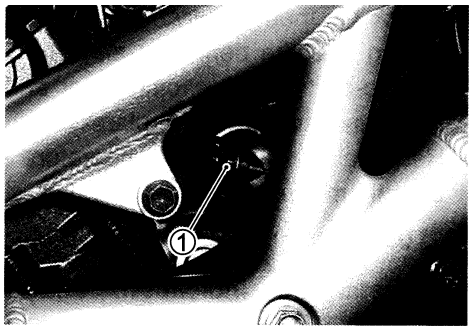

INSPECTION

- Check the engine coolant temperature switch closing or opening temperatures by testing it at the bench as shown in the figure. Connect the temperature switch to a circuit tester and place it in the oil contained in a pan, which is placed on a stove.
- Heat the oil to raise its temperature slowly and read the column thermometer when the switch closes or opens.

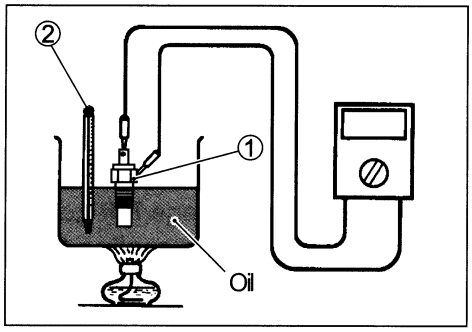

TOOL 09900-25008: Multi circuit tester set

Tester knob indication: Continuity test(•))))

DATA Engine Coolant temperature switch operating temperature
Standard (OFF→ON): Approx. 115°C (239°F)
(ON→OFF): Approx. 108°C (226.4°F)

⚠ CAUTION

- **Take special care when handling the temperature-switch. It may cause damage if it gets a sharp impact.**
- **Do not contact the engine coolant temperature switch ① and the column thermometer ② with a pan.**

INSTALLATION

- Apply a small quantity of SUZUKI BOND "1207B" to the engine coolant temperature switch thread portion.

1207B 99104-31140: SUZUKI BOND "1207B"

- Tighten the engine coolant temperature switch to the specified torque.

Engine coolant temperature switch: 10 N·m (1.0 kgf·m, 7.3 lb-ft)

- Install the fuel tank.
- Install the front and rear seats. (☞ 6-3)
- Pour engine coolant. (☞ 2-18)

THERMOSTAT

REMOVAL

- Drain engine coolant. (☞ 2-18)
- Remove the front and rear seats. (☞ 6-3)
- Lift and support the fuel tank. (☞ 4-4)
- Remove the air cleaner box. (☞ 3-4)
- Disconnect the ground lead wire ①.
- Disconnect the water hose ②.

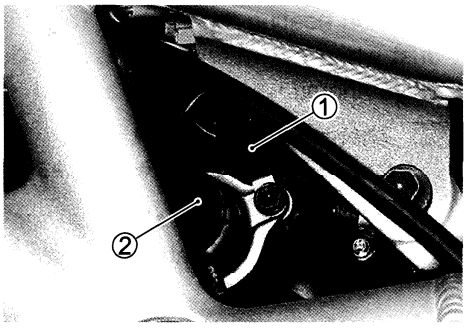

- Remove the thermostat case cover.

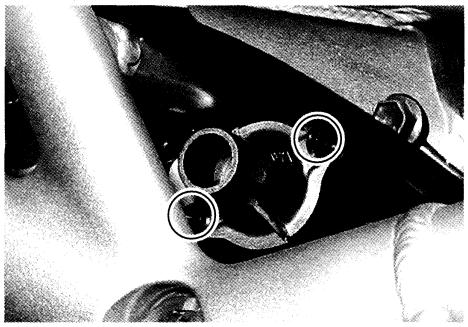

- Remove the thermostat ①.

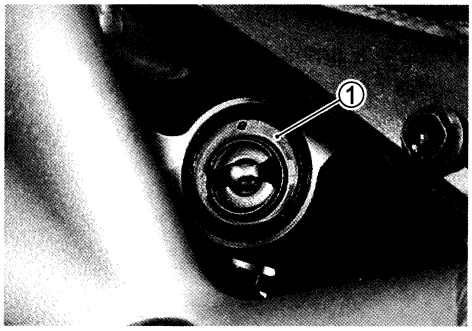

INSPECTION

Inspect the thermostat pellet for signs of cracking.
Test the thermostat at the bench for control action, in the following manner.

- Pass a string between flange, as shown in the illustration.
- Immerse the thermostat in the water contained in a beaker, as shown in the illustration. Note that the immersed thermostat is in suspension. Heat the water by placing the beaker on a stove and observe the rising temperature on a thermometer.

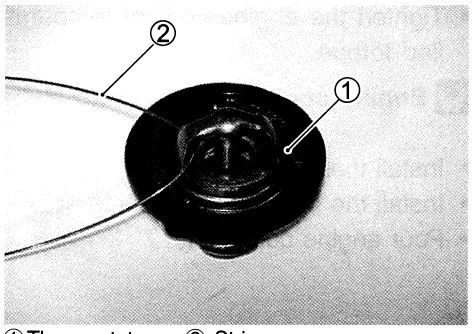

① Thermostat ② String

- Read the thermometer just when opening the thermostat. This reading, which is the temperature level at which the thermostat valve begins to open, should be within the standard value.

DATA Thermostat valve opening temperature
Standard: Approx. 82°C (179.6°F)

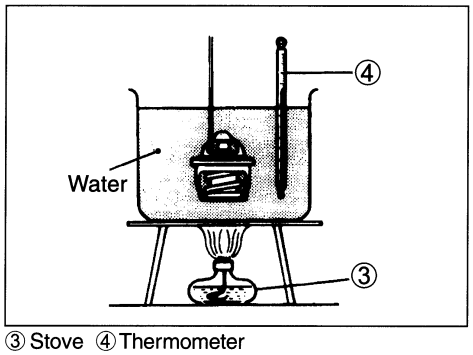

③ Stove ④ Thermometer

- Keep on heating the water to raise its temperature.
- Just when the water reaches specified valve, the thermostat valve should have lifted by at least 8.0 mm (0.31 in).

DATA Thermostat valve lift
Standard: Over 8.0 mm at 95°C (Over 0.31 in at 203°F)

- A thermostat failing to satisfy either of the two requirements (start-to-open temperature and valve lift) must be replaced.

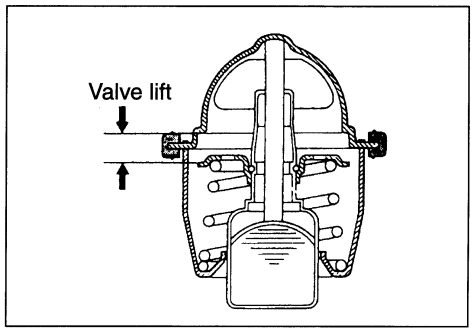

INSTALLATION

- Install the thermostat.

NOTE:
The jiggle valve Ⓐ of the thermostat faces upside.

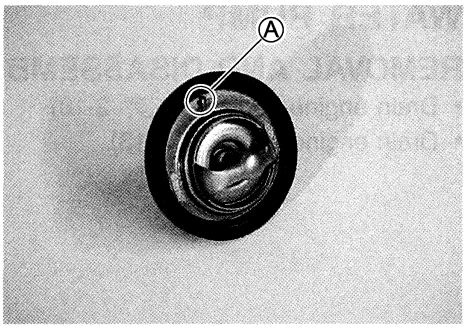

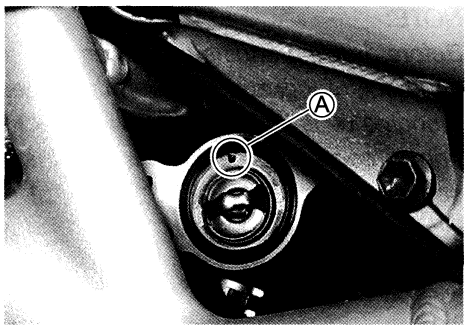

- Install the thermostat case cover and the ground lead wire terminal ①.

NOTE:
The rib Ⓑ of the thermostat case cover faces lower.

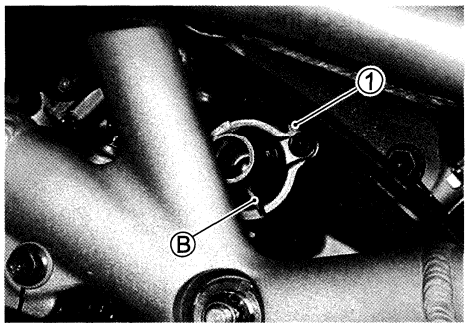

- Connect the water hose.
- Connect the ground lead wire.

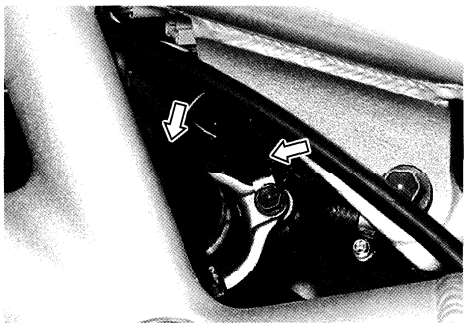

- Install the air cleaner box.
- Install the fuel tank.
- Install the front and rear seat. (☞ 6-3)
- Pour engine coolant. (☞ 2-18)

WATER PUMP

REMOVAL AND DISASSEMBLY

- Drain engine coolant. (☞ 2-18)
- Drain engine oil. (☞ 2-13)

NOTE:
Before draining engine oil and engine coolant, inspect engine oil and coolant leakage between the water pump and clutch cover. If engine oil is leaking, visually inspect the oil seal and O-ring. If engine coolant is leaking, visually inspect the mechanical seal, seal washer and O-rings. (☞ 5-15)

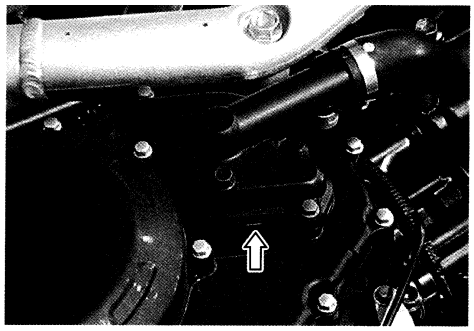

- Disconnect the water hoses ①.

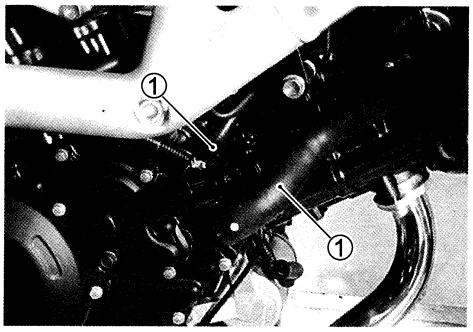

- Remove the clutch cover with the water pump.

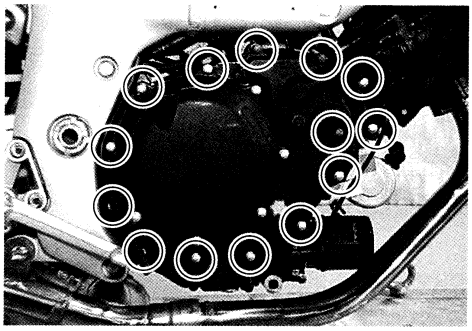

- Remove the dowel pins ② and gasket ③.

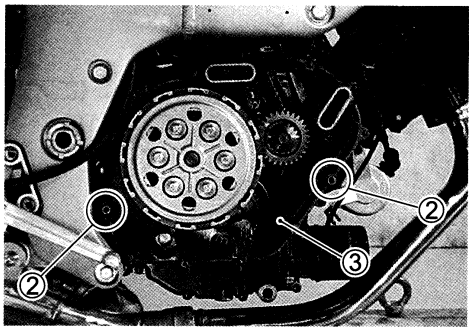

- Remove the circlip and the water pump driven gear ①.

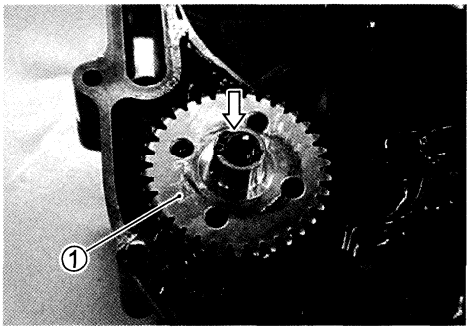

- Remove the pin ② and washer ③.

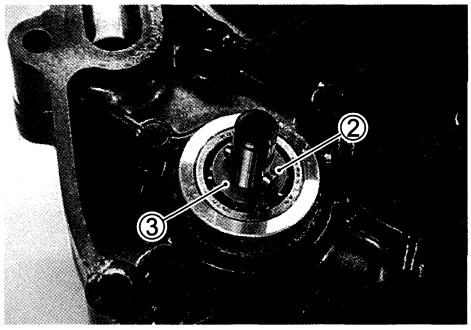

- Remove the water pump ④ from the clutch cover.

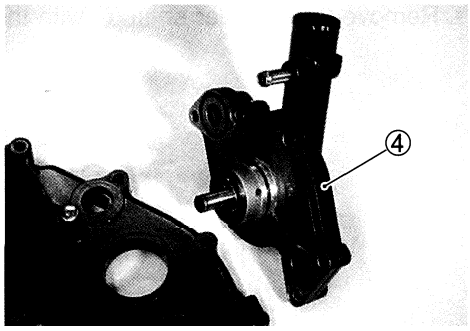

- Remove the screws and separate the water pump.

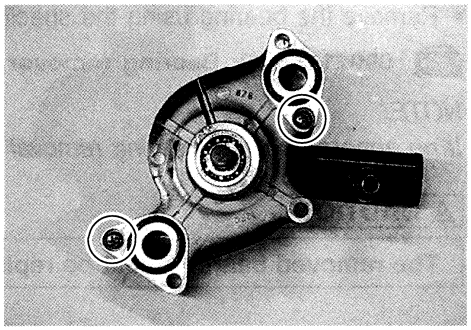

- Remove the Impeller ①.

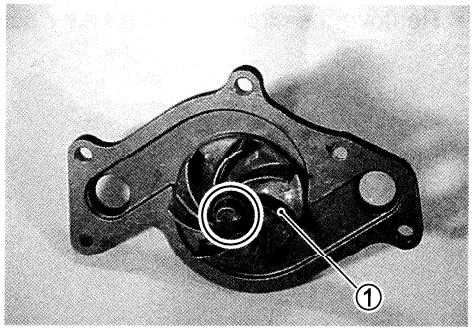

- Remove the mechanical seal ring ②, the rubber seal ③ and the washer ④ from the impeller.

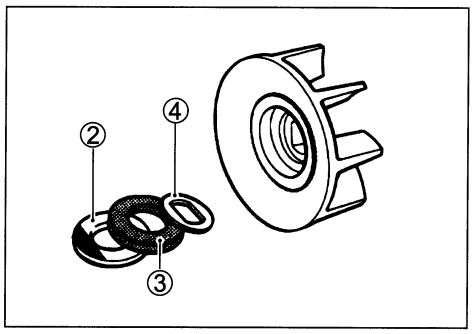

- Remove the impeller shaft ⑤ with the E-ring.

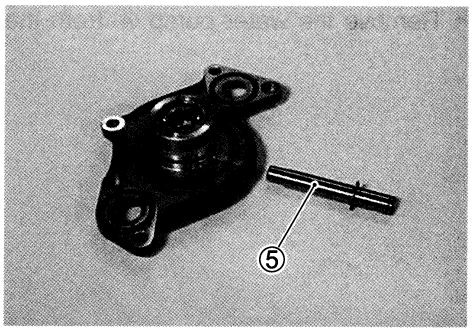

- Remove the bearing using the special tool (ϕ10 mm).

TOOL 09921-20220: Bearing remover set

NOTE:
If no abnormal noise, bearing removal is not necessary.

⚠ CAUTION

The removed bearing must be replaced with a new one.

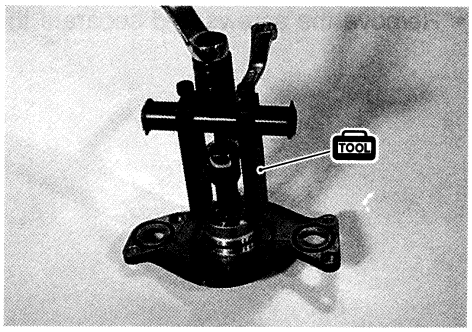

- Remove the mechanical seal using a suitable bar.

NOTE:
If no abnormal, the mechanical seal removal is not necessary.

⚠ CAUTION

The removed mechanical seal must be replaced with a new one.

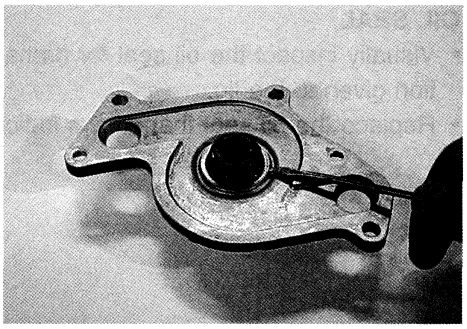

- Remove the oil seal using a suitable bar.

NOTE:
If no abnormal, the oil seal removal is not necessary.

⚠ CAUTION

The removed oil seal must be replaced with a new one.

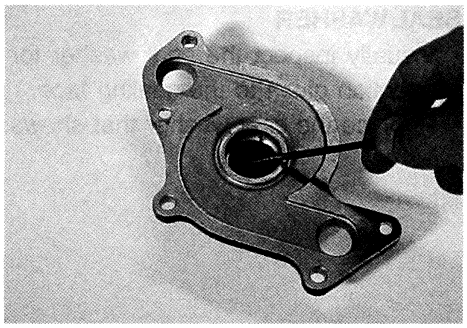

INSPECTION

BEARING

- Inspect the play of the bearing by hand while it is in the water pump case.
- Rotate the inner race by hand to inspect for abnormal noise and smooth rotation.
- Replace the bearing if there is anything unusual.

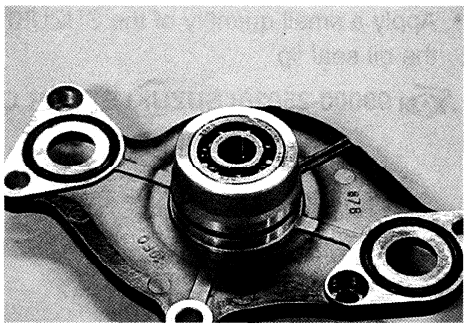

MECHANICAL SEAL

- Visually inspect the mechanical seal for damage, with particular attention given to the sealing face.
- Replace the mechanical seal that shows indications of leakage. Also replace the seal ring if necessary.

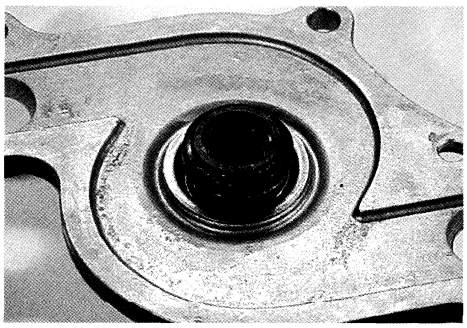

OIL SEAL

- Visually inspect the oil seal for damage, with particular attention given to the lip.
- Replace the oil seal that shows indications of leakage.

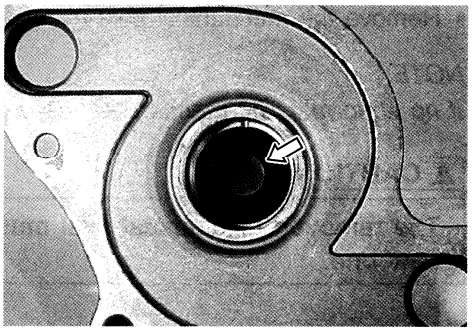

SEAL WASHER

- Visually inspect the seal washer for damage, with particular attention given to the sealing face.
- Replace the seal washer that shows indications of leakage.

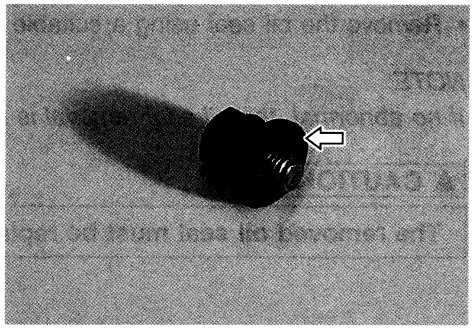

REASSEMBLY AND INSTALLATION

- Install the oil seal using the special tool.

TOOL 09913-70210: Bearing installer set

NOTE:
The stamped mark Ⓐ on the oil seal faces outside.

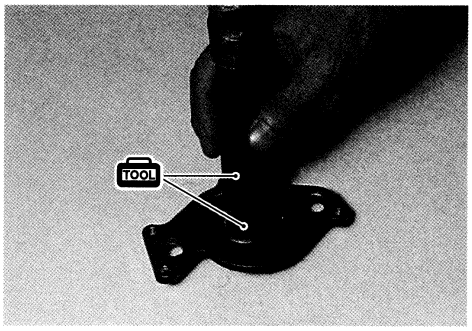

- Apply a small quantity of the SUZUKI SUPER GREASE "A" to the oil seal lip.

99000-25030: SUZUKI SUPER GREASE "A"

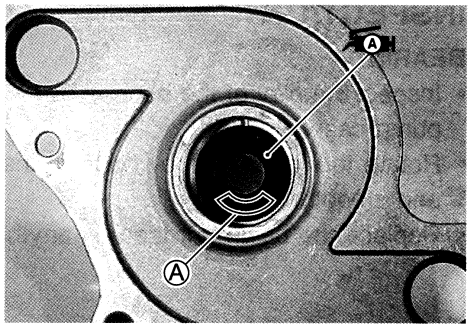

- Install the new mechanical seal using the special tool.

TOOL 09913-70210: Bearing installer set

NOTE:
The new mechanical seal has been applied the sealer Ⓐ.

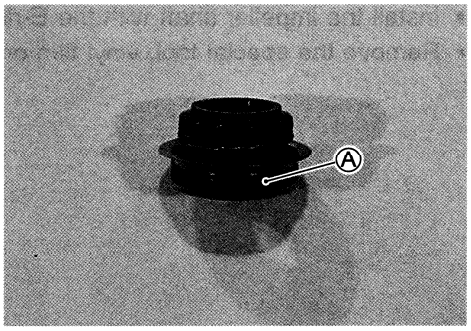

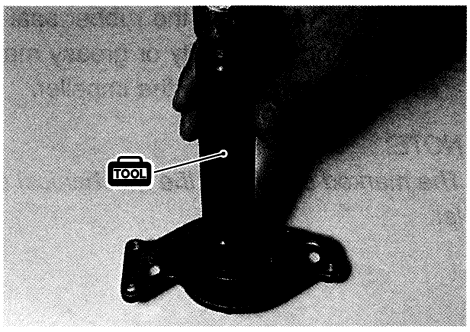

- Install the new bearing using the special tool.

TOOL 09913-70210: Bearing installer set

NOTE:
The stamped mark on the bearing faces crankcase side.

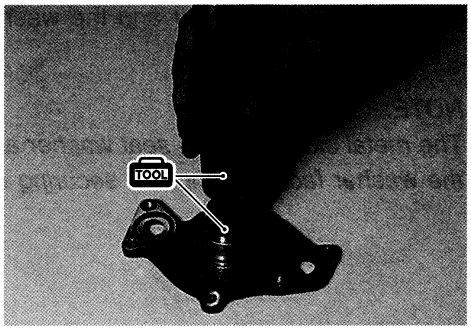

- Install the E-ring to the impeller shaft.
- To protect the oil seal lip from damage, cover the edge of the impeller shaft with the special tool, vinyl film or tape.

TOOL 09923-80210: Oil seal guide

- Apply grease to the special tool, vinyl film or tape.

Ⓐ 99000-25030: SUZUKI SUPER GREASE "A"

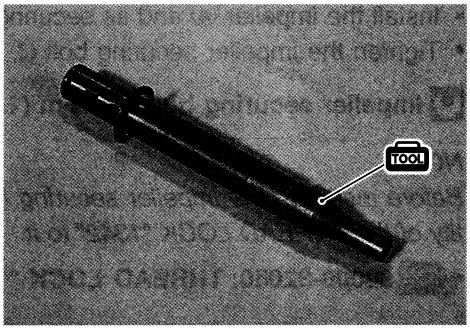

- Install the impeller shaft with the E-ring.
- Remove the special tool, vinyl film or tape.

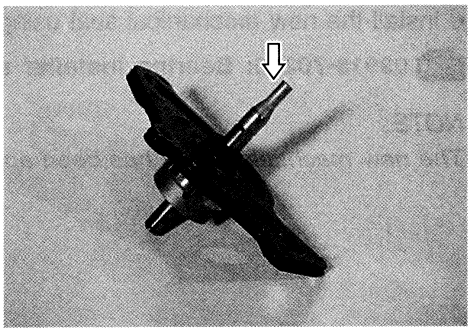

- Install the washer ① the rubber seal ② into the impeller.
- After wiping off the oily or greasy matter from the mechanical seal ring, install it into the impeller.

NOTE:
The marked side Ⓐ of the mechanical seal ring faces the impeller.

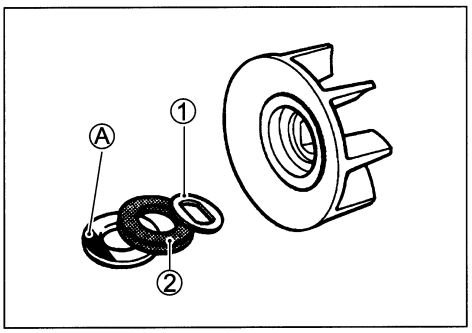

- Install the seal washer and the washer onto the impeller securing bolt ③.

NOTE:
The metal side Ⓑ of the seal washer and the convex side Ⓒ of the washer face the impeller securing bolt head.

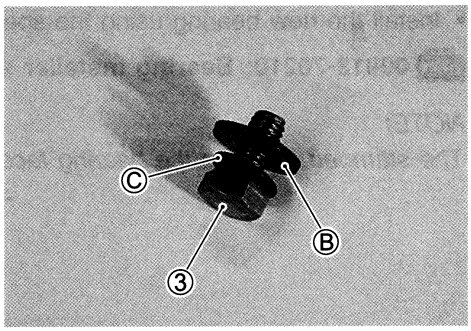

- Install the impeller ④ and its securing bolt ③ onto the shaft.
- Tighten the impeller securing bolt ③ to the specified torque.

Impeller securing bolt: 13 N·m (1.3 kgf·m, 9.5 lb-ft)

NOTE:
Before installing the impeller securing bolt, apply a small quantity of the THREAD LOCK "1342" to it.

99000-32050: THREAD LOCK "1342"

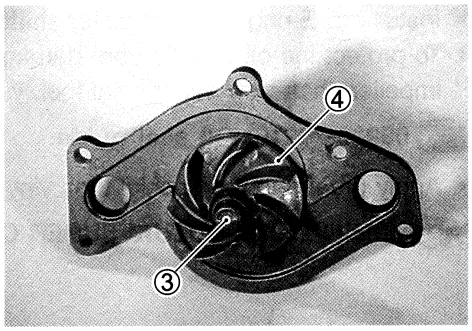

- Install the new O-ring ⑤ onto the water pump cover ⑥.

▲ CAUTION

Use the new O-ring to prevent engine coolant leakage.

NOTE:
Apply engine coolant to the O-ring ⑤.

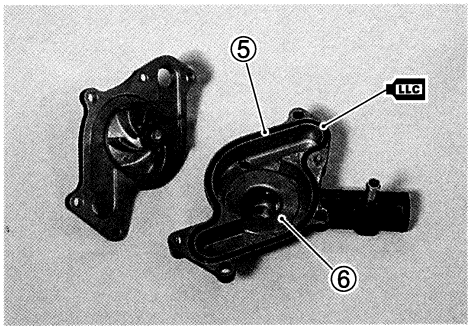

- Tighten the water pump cover screws to the specified torque.

Water pump cover screw: 4.5 N·m (0.45 kgf·m, 3.3 lb-ft)

- Install the new O-rings ①, ② to the water pump.

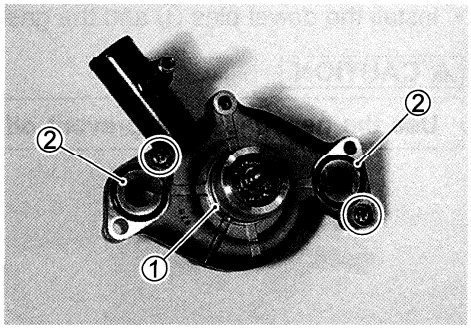

NOTE:
Apply grease to the O-ring ①.

99000-25030: SUZUKI SUPER GREASE "A"

NOTE:
Apply SUZUKI BOND "1207B" to the O-rings ②.

99104-31140: SUZUKI BOND "1207B"

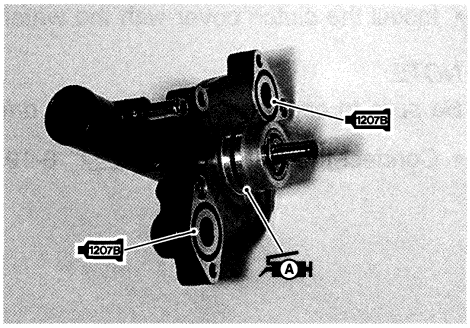

- Install the water pump ③ to the clutch cover.

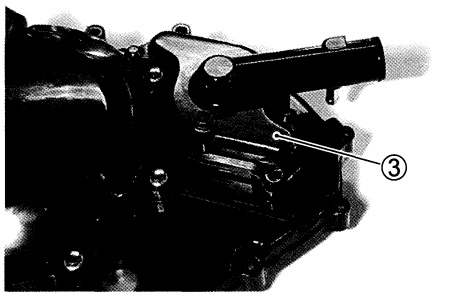

- Install the washer ④, the pin ⑤ and water pump driven gear ⑥.

NOTE:
The boss Ⓐ of the water pump driven gear ⑥ faces crankcase side.

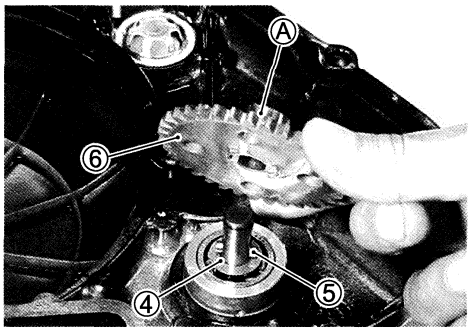

- Install the circlip ⑦.

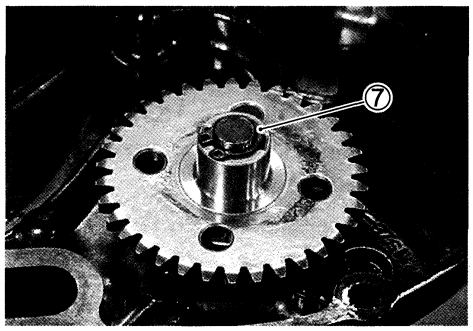

- Install the dowel pins ① and the gasket ②.

⚠ CAUTION

Use the new gasket to prevent oil leakage.

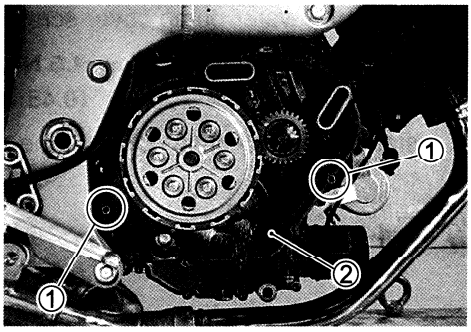

- Install the clutch cover with the water pump. (☞ 3-100)

NOTE:
Be sure to engage the water pump drive and driven gears.

- Connect the water hoses. (☞ 8-19)

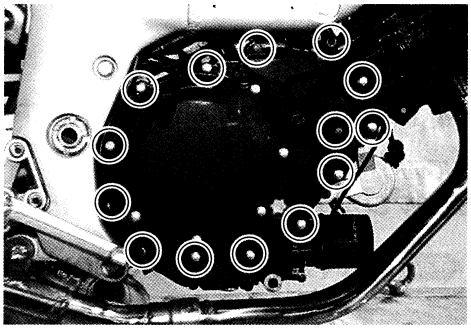

- Pour engine coolant. (☞ 2-18)
- Pour engine oil. (☞ 2-13)

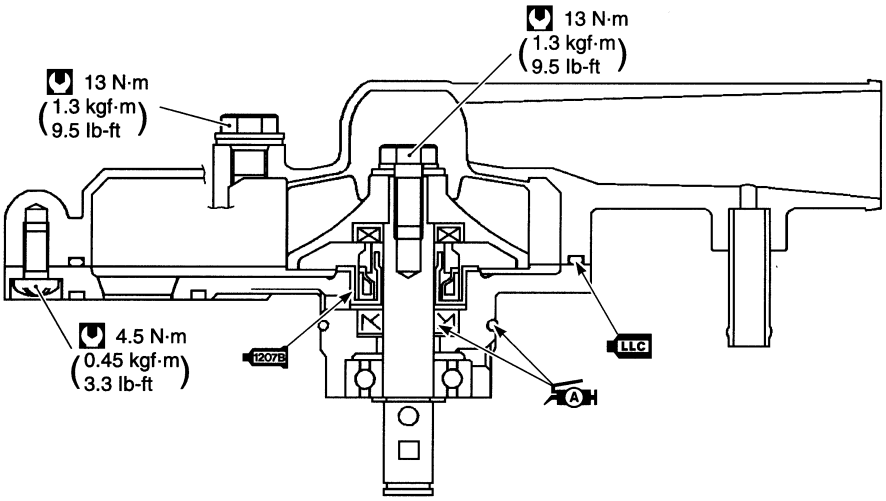

CHASSIS

CONTENTS

EXTERIOR PARTS 6- 2
CONSTRUCTION 6- 2
REAR SEAT 6- 3
FRAME SIDE COVER 6- 3
FRONT SEAT 6- 3
FRONT FENDER 6- 3
SEAT TAIL COVER 6- 4
FRONT WHEEL 6- 5
CONSTRUCTION 6- 5
REMOVAL 6- 7
DISASSEMBLY 6- 7
INSPECTION 6- 8
REASSEMBLY AND REMOUNTING 6- 9
FRONT FORK 6-11
CONSTRUCTION 6-11
REMOVAL AND DISASSEMBLY 6-12
INSPECTION 6-14
REASSEMBLY AND REMOUNTING 6-15
STEERING 6-19
CONSTRUCTION 6-19
HANDLEBARS 6-20
STEERING REMOVAL 6-23
STEERING INSPECTION AND DISASSEMBLY 6-24
STEERING INSTALLATION 6-26
STEERING TENSION ADJUSTMENT 6-28
REAR WHEEL 6-29
CONSTRUCTION 6-29
REMOVAL 6-31
DISASSEMBLY 6-31
INSPECTION 6-32
REASSEMBLY AND REMOUNTING 6-34
REAR SUSPENSION 6-37
CONSTRUCTION 6-37
REAR SHOCK ABSORBER AND CUSHION ROD 6-39
SWINGARM 6-41
SUSPENSION SETTING 6-45
FRONT BRAKE 6-46
CONSTRUCTION 6-46
BRAKE FLUID REPLACEMENT 6-47
BRAKE PAD REPLACEMENT 6-48
FRONT BRAKE CALIPER 6-48
FRONT MASTER CYLINDER 6-51
REAR BRAKE 6-55
CONSTRUCTION 6-55
BRAKE FLUID REPLACEMENT 6-56
BRAKE PAD REPLACEMENT 6-56
REAR BRAKE CALIPER 6-57
REAR MASTER CYLINDER 6-61
TIRE AND WHEEL 6-64
TIRE REMOVAL 6-64
INSPECTION 6-64
TIRE INSTALLATION 6-65

EXTERIOR PARTS

CONSTRUCTION

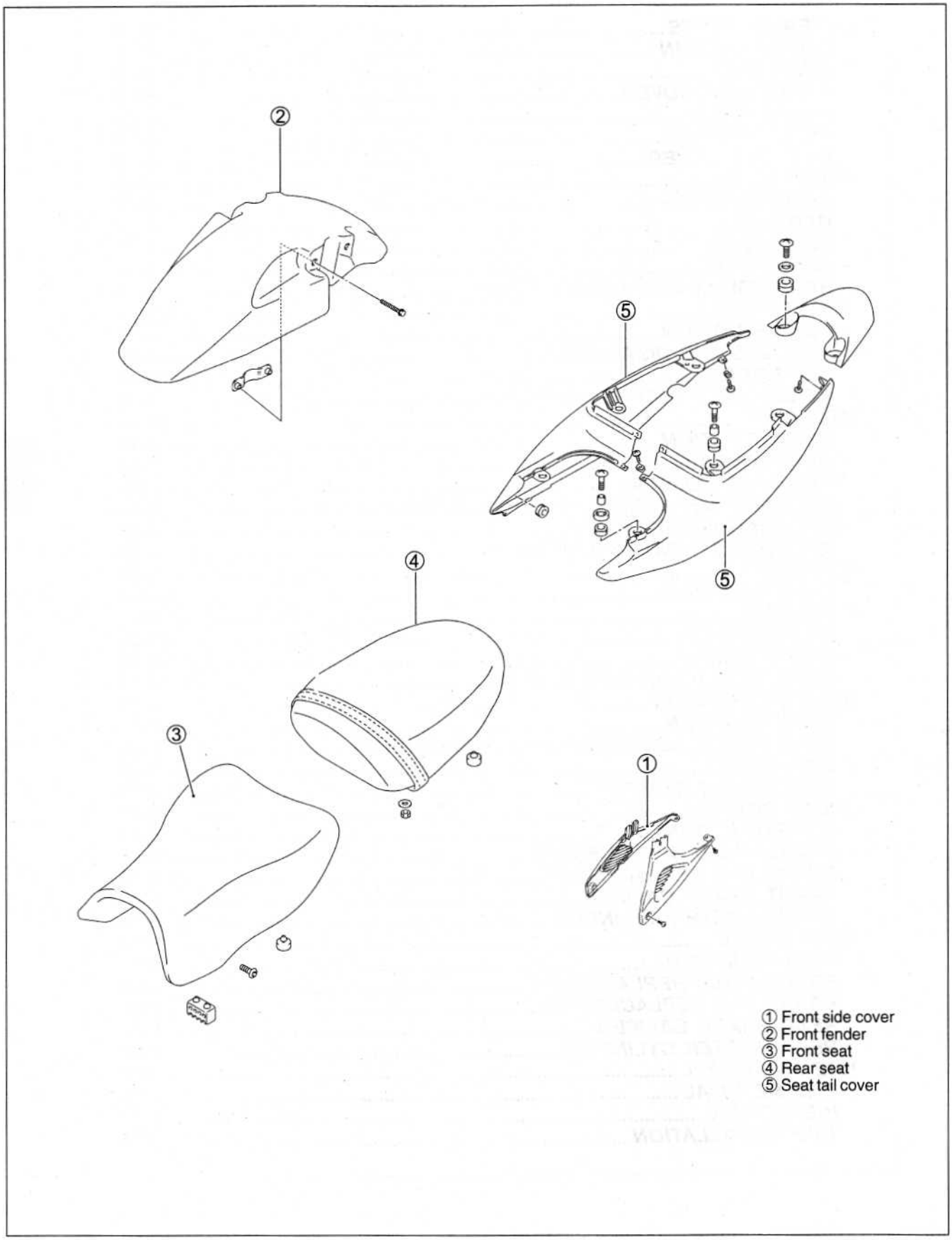

① Front side cover
② Front fender
③ Front seat
④ Rear seat
⑤ Seat tail cover

REAR SEAT

- Remove the rear seat using the ignition key.

NOTE:
When remounting the rear seat, make sure to lock its striker.

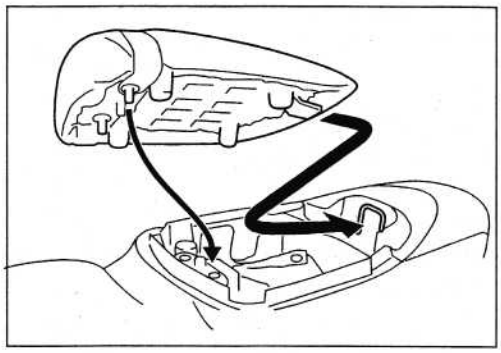

FRAME SIDE COVER

- Remove the frame side cover bolts and fasteners.

NOTE:
When installing the frame side cover, first install the upper side to the front seat.

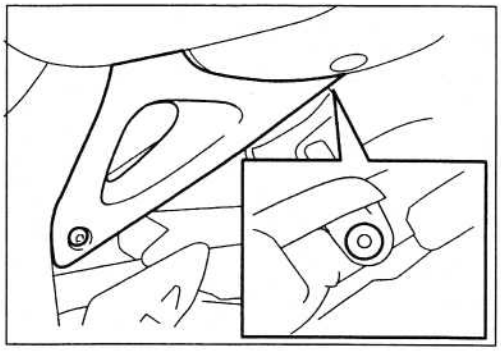

FRONT SEAT

- Remove the frame side covers.
- Remove the front seat removing the bolts.
- Remount the front seat in the reverse order of removal.

NOTE:
When remount the front seat, make sure the seat hook is in retainer.

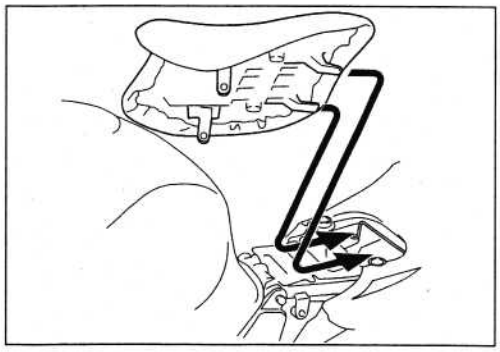

FRONT FENDER

- Unhook the speed sensor lead wire from the front fender.
- Remove the front fender by removing its bolts.
- Remount the front fender in the reverse order of removal.

NOTE:
Face the triangle mark on the front fender plate to front side.

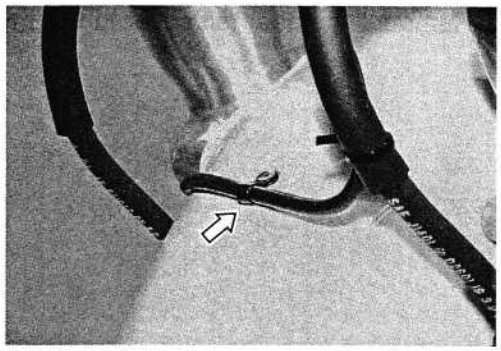

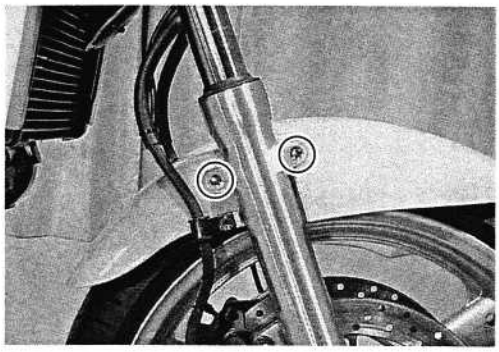

SEAT TAIL COVER

- Remove the rear seat, the frame side covers and the front seat.
- Disconnect the seat lock cable.
- Remove the screws.

NOTE:

* *Not to expand the right and left seat tail covers larger than required to remove.*

* *Place the rags on the seat tail cover to prevent scratching the paint surface of the seat tail cover.*

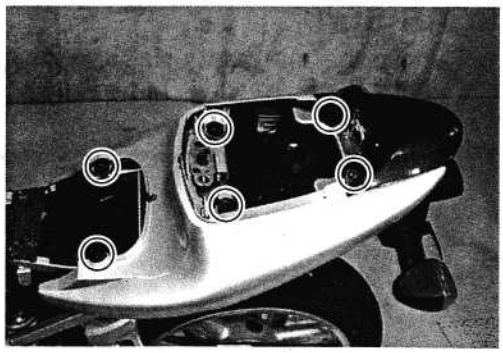

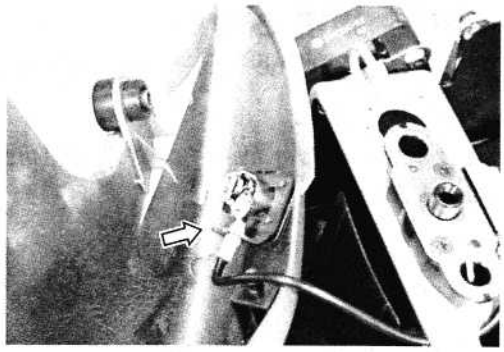

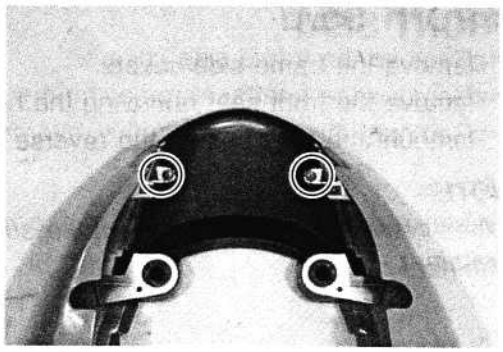

- Remount the seat tail cover in the reverse order of removal.

FRONT WHEEL

CONSTRUCTION

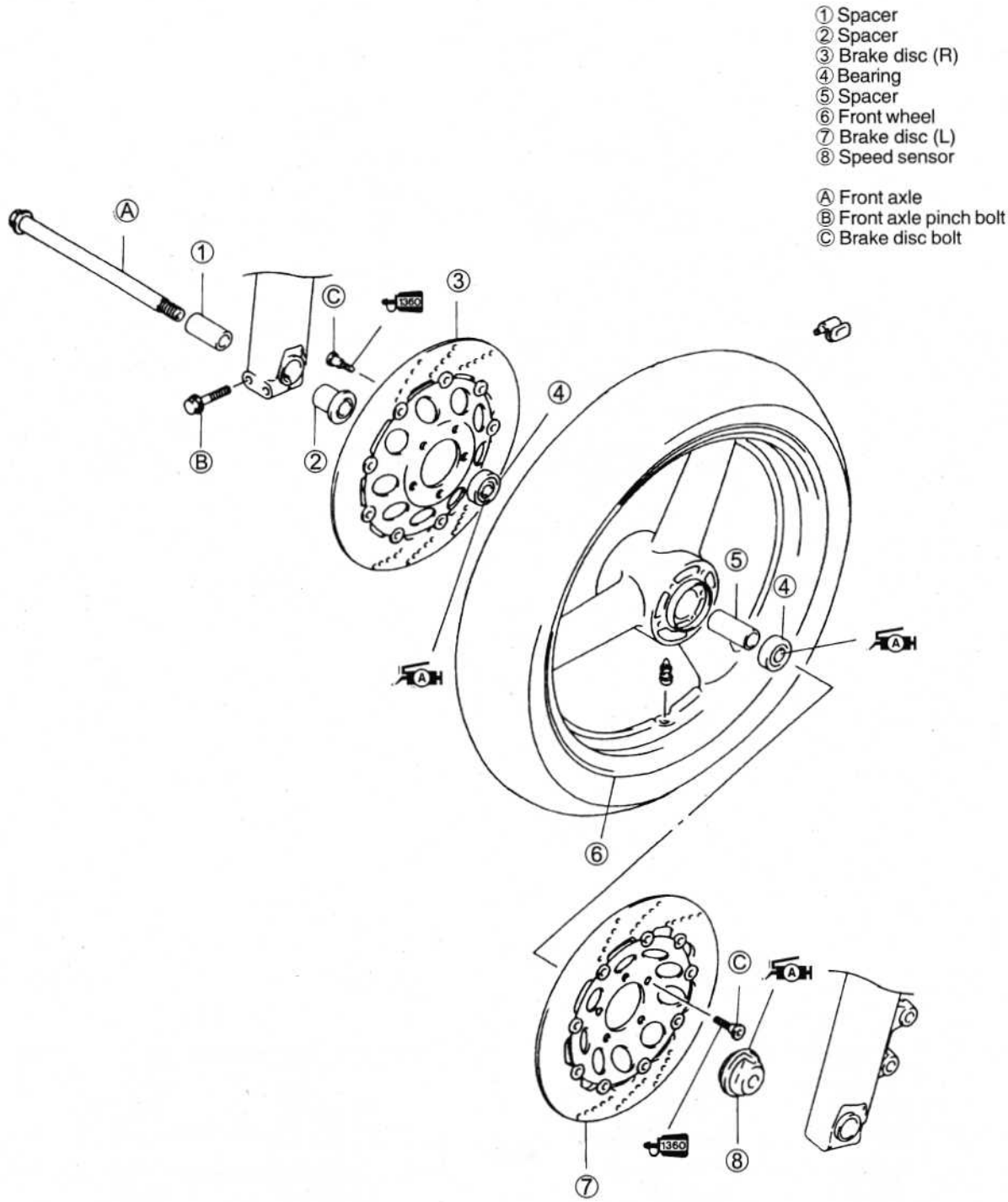

ITEM	N·m	kgf·m	lb-ft
Ⓐ	65	6.5	47.0
Ⓑ	23	2.3	16.5
Ⓒ	23	2.3	16.5

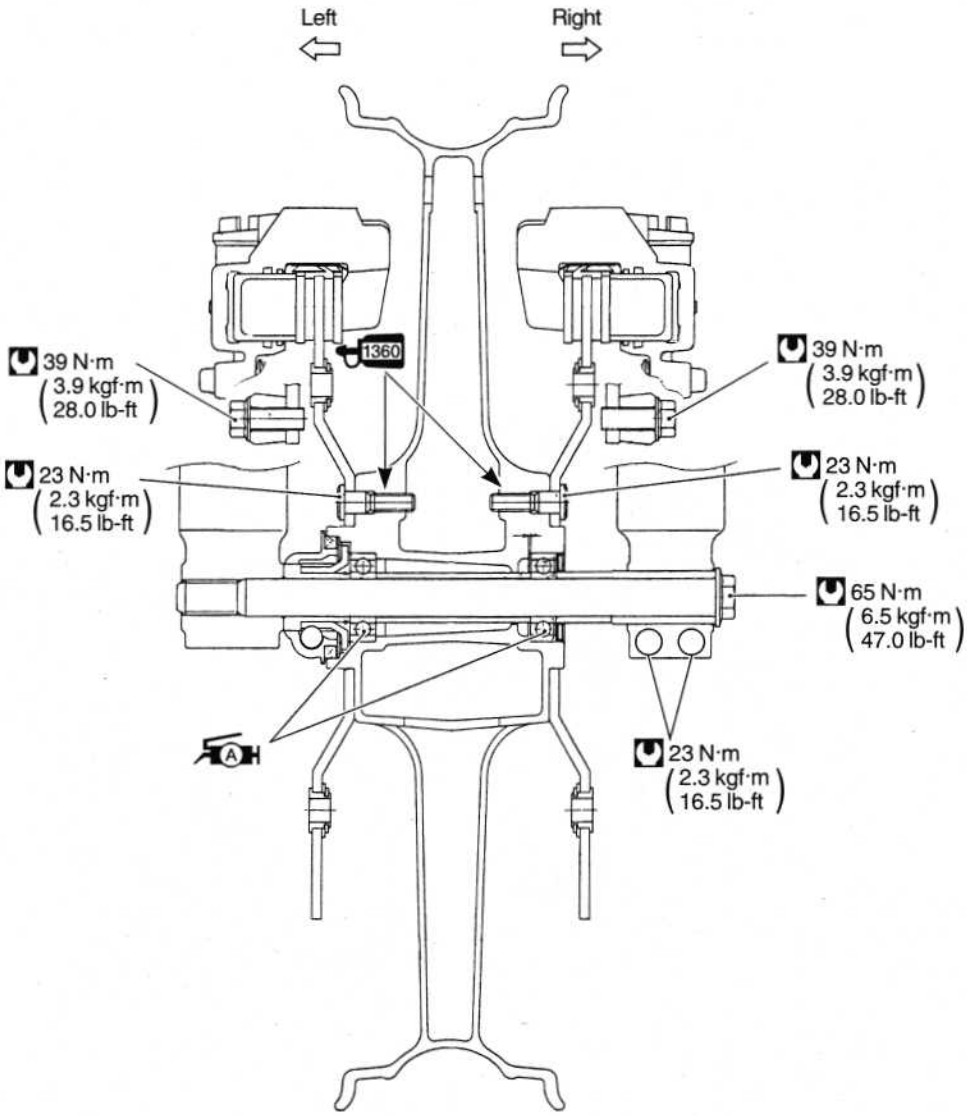
Left
Right
39 N·m
(3.9 kgf·m
28.0 lb-ft)
1360
39 N·m
(3.9 kgf·m
28.0 lb-ft)
23 N·m
(2.3 kgf·m
16.5 lb-ft)
23 N·m
(2.3 kgf·m
16.5 lb-ft)
65 N·m
(6.5 kgf·m
47.0 lb-ft)
A
23 N·m
(2.3 kgf·m
16.5 lb-ft)

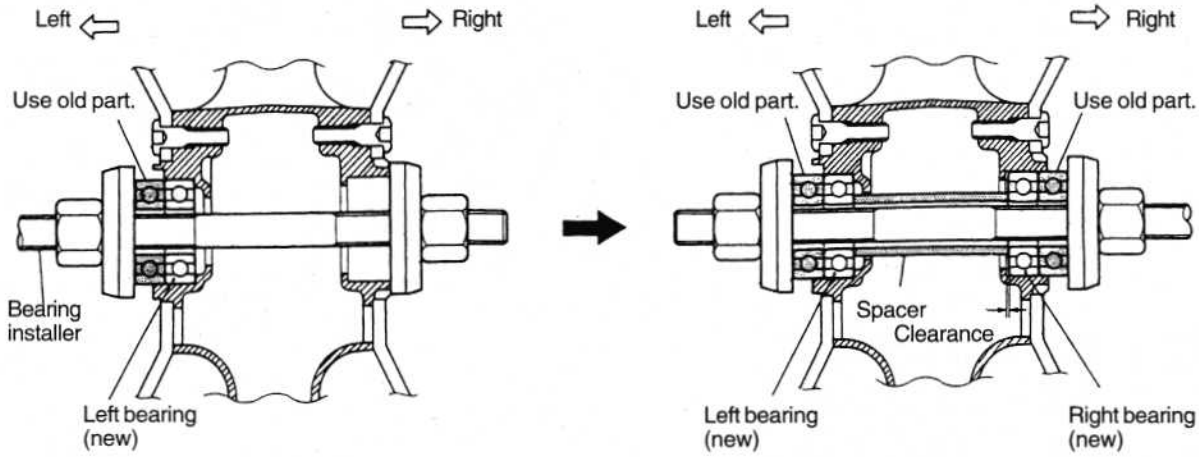
Left
Right
Use old part.
Bearing
installer
Left bearing
(new)
Left
Right
Use old part.
Use old part.
Spacer
Clearance
Left bearing
(new)
Right bearing
(new)

REMOVAL

- Remove the front wheel by removing the following items.
  ① Front brake calipers
  ② Axle pinch bolts
  ③ Front axle

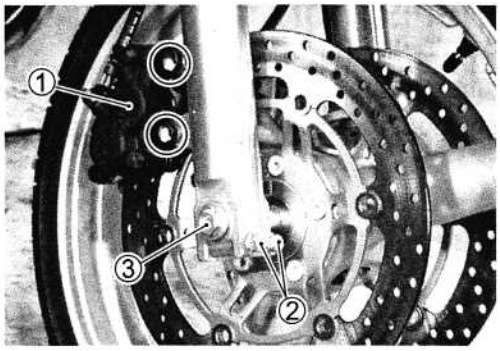

NOTE:

* *Be careful not to damage the engine or frame by a jack.*
* *Before raising the front wheel off the ground with a jack, loosen each bolt.*
* *After removing the front wheel, fit the both calipers temporarily to the original positions.*
* *Do not operate the brake lever while dismounting the front wheel.*

DISASSEMBLY

- Remove the brake discs.

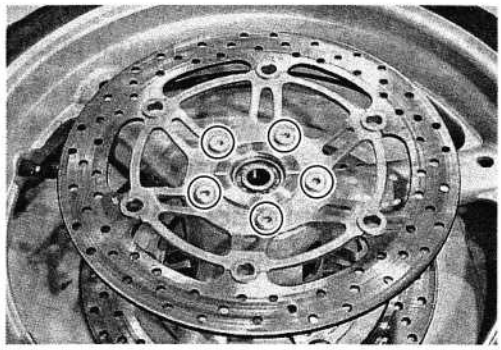

- Insert the adaptor ① into the wheel bearing.
- After inserting the wedge bar from the opposite side, lock the wedge bar ② in the slit of the adaptor.
- Drive out both wheel bearings by striking the wedge bar.

TOOL 09941-50111: Bearing remover

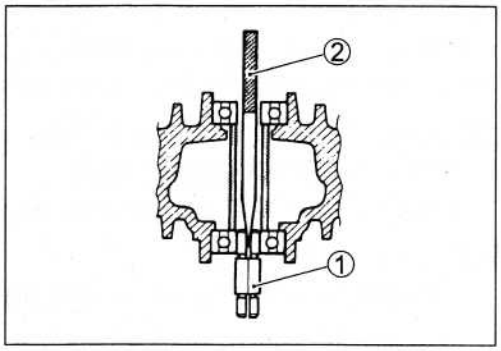

⚠ CAUTION

The removed bearings must be replaced with new ones.

INSPECTION

SPEED SENSOR

- Inspect the smooth rotation of the speed sensor rotor by hand.
- Inspect the dust seal lip for damage or wear.

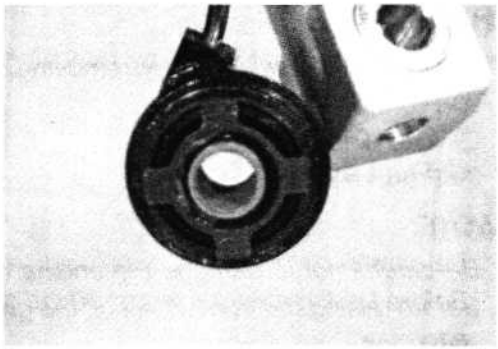

WHEEL BEARINGS

Inspect the play of the wheel bearings by finger while they are in the wheel. Rotate the inner race by finger to inspect for abnormal noise and smooth rotation.
Replace the bearing in the following procedure if there is any thing unusual.

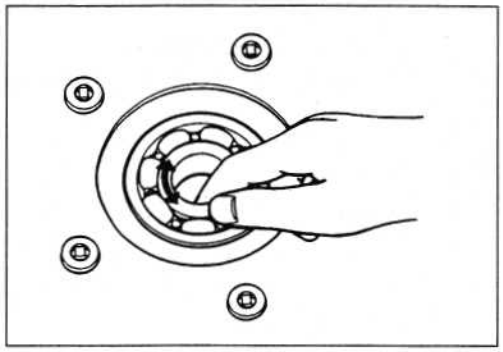

FRONT WHEEL

Make sure that the wheel runout checked as shown does not exceed the service limit. An excessive runout is usually due to worn or loosen wheel bearings. If bearing replacement fails to reduce the runout, replace the wheel.

DATA Wheel rim runout (Axial and Radial)
Service Limit: 2.0 mm (0.08 in)

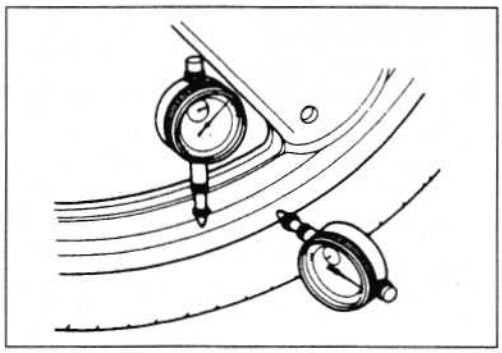

FRONT AXLE

Using a dial gauge, check the front axle for runout.
If the runout exceeds the limit, replace the front axle.

TOOL 09900-20606: Dial gauge (1/100 mm)
09900-20701: Magnetic stand
09900-21304: V-block set (100 mm)

DATA Front axle runout
Service Limit: 0.25 mm (0.010 in)

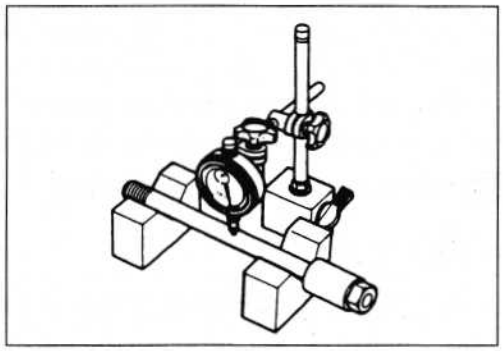

BRAKE DISC

- Visually check the brake disc for damage or cracks.
- Measure the thickness with a micrometer.
- Replace the disc if the thickness is less than the service limit or if damage is found.

DATA Brake disc thickness (Front)
Service Limit: 4.0 mm (0.16 in)

TOOL 09900-20205: Micrometer (0 – 25 mm)

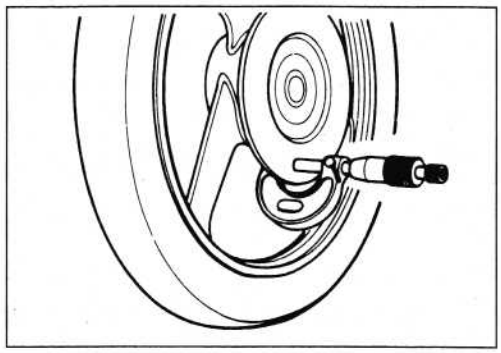

- Measure the runout using the dial gauge.
- Replace the disc if the runout exceeds the service limit.

TOOL 09900-20606: Dial gauge (1/100 mm)
09900-20701: Magnetic stand

DATA Brake disc runout (Front)
Service Limit: 0.3 mm (0.012 in)

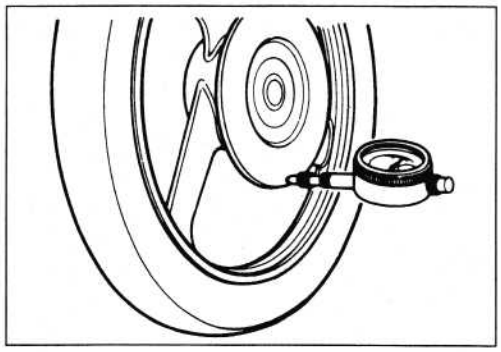

TIRE

(☞ 2-25, 6-64)

REASSEMBLY AND REMOUNTING

Reassemble and remount the front wheel in the reverse order of removal and disassembly. Pay attention to the following points:

WHEEL BEARING

- Apply SUZUKI SUPER GREASE "A" to the bearings before installing.

A 99000-25030: SUZUKI SUPER GREASE "A"

- Install the left side bearing using the special tool ①.
- Install the spacer.
- Install the right side bearing using the special tool ①.

NOTE:
The seal sides of the bearings should face outside.

TOOL 09941-34513: Bearing/Steering race installer set

⚠ CAUTION

First install the left wheel bearing, then install the right wheel bearing. (☞ 6-6)

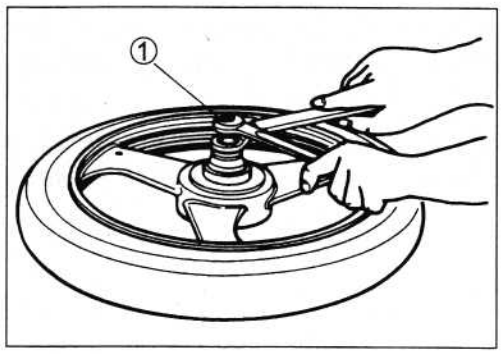

BRAKE DISC

- Make sure that the brake disc is clean and free of any greasy matter. Apply THREAD LOCK SUPER "1360" to the brake disc mounting bolts and tighten them to the specified torque.

99000-32130: THREAD LOCK SUPER "1360"

Brake disc bolt: 23 N·m (2.3 kgf·m, 16.5 lb-ft)

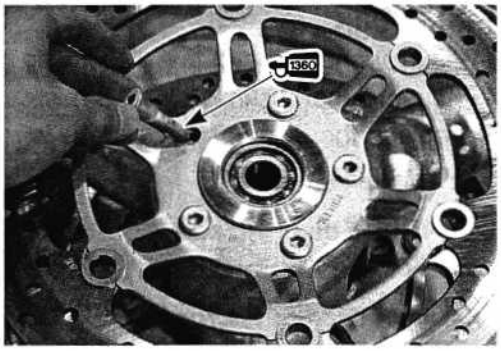

- Apply grease to the dust seal lip and the drive lugs.

99000-25030: SUZUKI SUPER GREASE "A"

- Align the drive lugs with the recesses on the wheel hub and then fit the speed sensor onto the wheel hub.

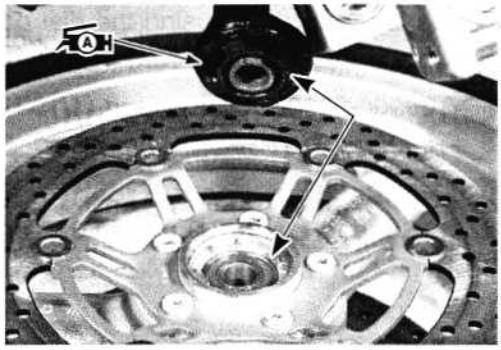

- Have the stopper on the speed sensor touch the lug the front fork leg.

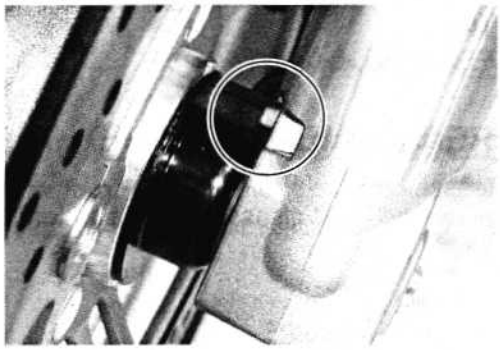

- Tighten each bolt to the specified torque.

Front axle ①: 65 N·m (6.5 kgf·m, 47.0 lb-ft)
Front axle pinch bolt ②: 23 N·m (2.3 kgf·m, 16.5 lb-ft)
Front brake caliper mounting bolt ③: 39 N·m (3.9 kgf·m, 28.0 lb-ft)

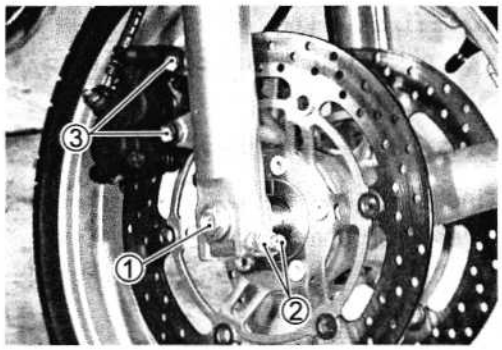

NOTE:

* *Before installing the front axle, apply grease to it.*

99000-25030: SUZUKI SUPER GREASE "A"

* *Before tightening the front axle and front axle pinch bolts, move the front fork up and down four or five times.*
* *Push the pistons all the way into the brake caliper and then remount the caliper.*
* *After remounting the brake calipers, pump the brake lever a few times to check for proper brake operation.*

FRONT FORK

CONSTRUCTION

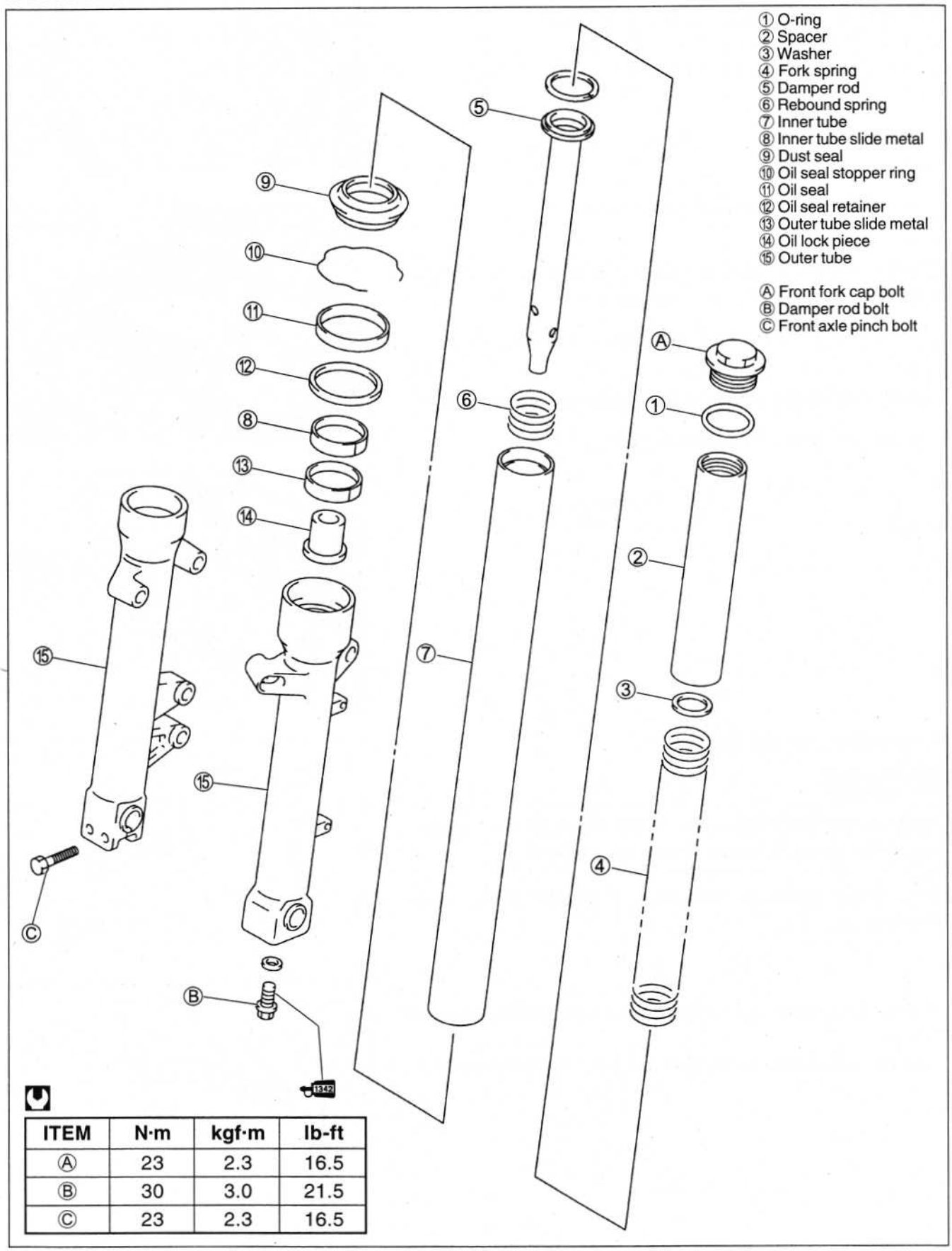

ITEM	N·m	kgf·m	lb-ft
Ⓐ	23	2.3	16.5
Ⓑ	30	3.0	21.5
Ⓒ	23	2.3	16.5

REMOVAL AND DISASSEMBLY

- Remove the brake hose clamp bolt and speed sensor clamp bolt.
- Remove the front brake calipers. (☞ 6-48)
- Remove the front wheel. (☞ 6-9)
- Remove the front fender (☞ 6-3)

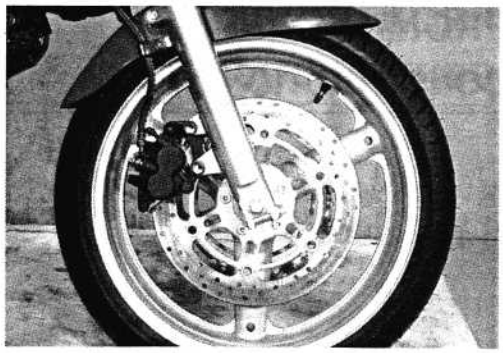

- Loosen the front fork upper clamp bolts.

NOTE:
Slightly loosen the front fork cap bolts before loosening the lower clamp bolts to facilitate later disassembly.

- Loosen the front fork lower clamp bolts, left and right.

NOTE:
Be careful not to drop the front fork when loosening the bolts.

- Remove the front forks, left and right.

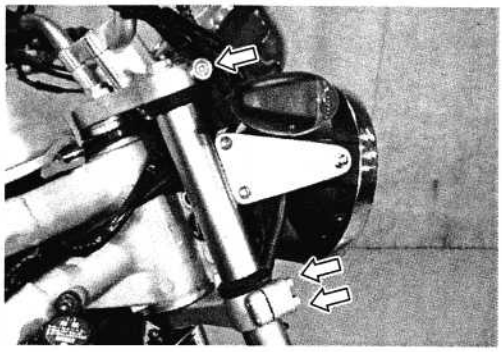

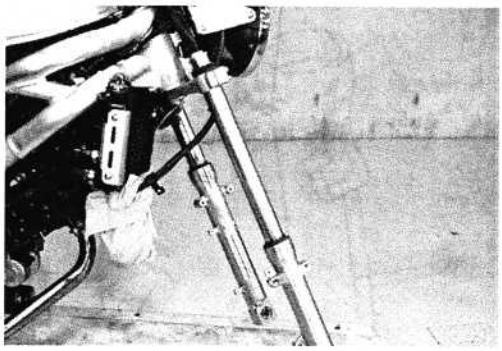

- Remove the front fork cap bolt ①.

⚠ WARNING

Hold the front fork cap when removing it, or it will jump out of the front fork due to spring pressure.

- Remove the spacer ③, the washer ④ and the spring ⑤ from the inner tube ②.

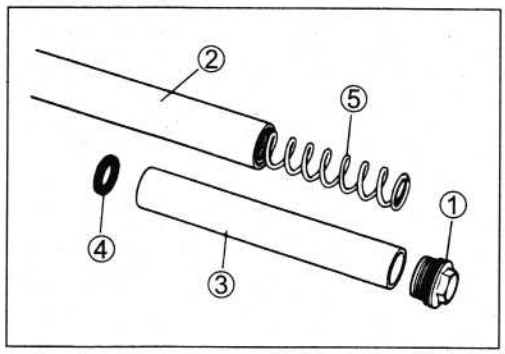

- Turn the fork upside down and stroke it several times to let out fork oil.
- Hold the fork upside down for a few minutes to drain oil.

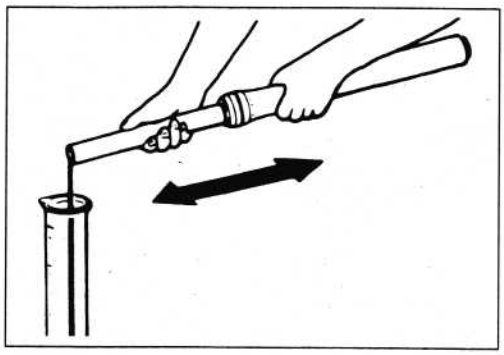

- While holding the caliper mounting portion Ⓐ by vise, remove the damper rod with the special tools.

TOOL 09940-34520: "T" handle
09940-34531: Attachment "A"

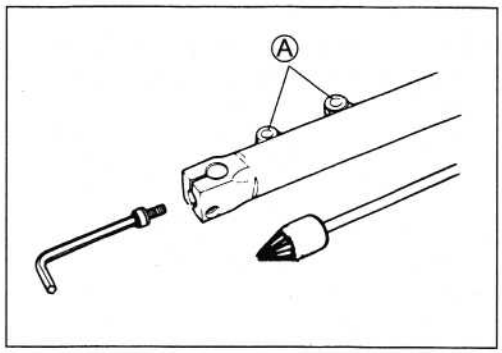

- Remove the damper rod ① and the rebound spring ②.

NOTE:
Be careful not to damage the inner tube.

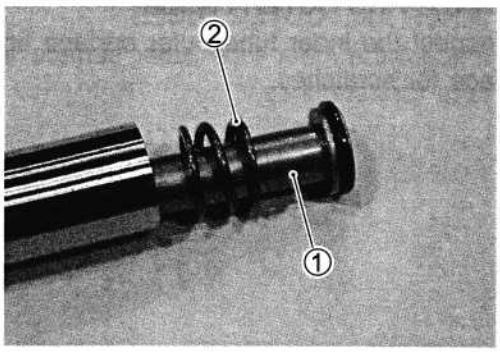

- Remove the dust seal ③ and the oil seal stopper ring ④.

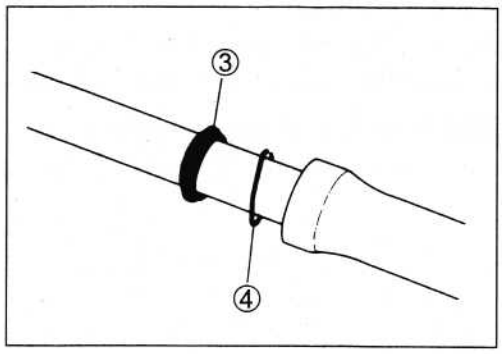

- Extract the inner tube from the outer tube.

NOTE:
Be careful not to damage the inner tube.

⚠ CAUTION

The "ANTI-FRICTION" metals, oil seals and dust seals must be replaced with new ones, when reassembling the front forks.

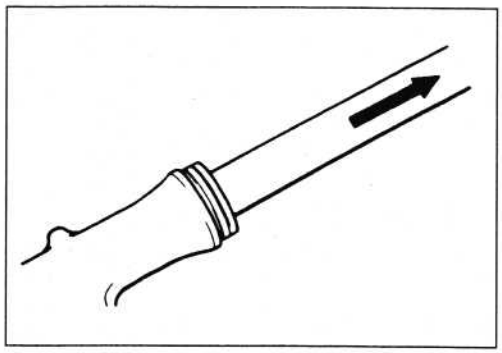

- Remove the following parts.
  ⑤ Oil seal
  ⑥ Oil seal retainer
  ⑦ Slide metal (Outer tube)
  ⑧ Slide metal (Inner tube)
  ⑨ Oil lock piece

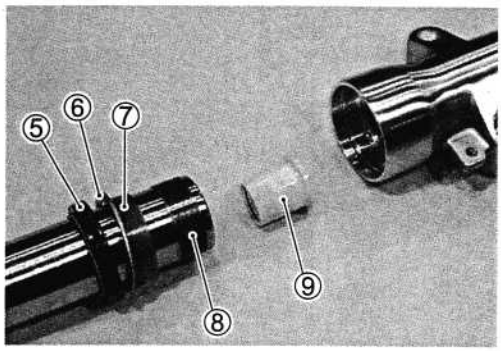

INSPECTION

Inspect the damper rod ring ① for wear or damage. If it is worn or damaged, replace it with a new one.

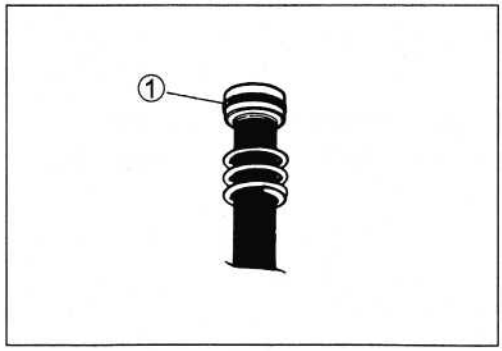

INNER AND OUTER TUBES

Inspect the inner tube outer surface and outer tube inner surface for scratches.

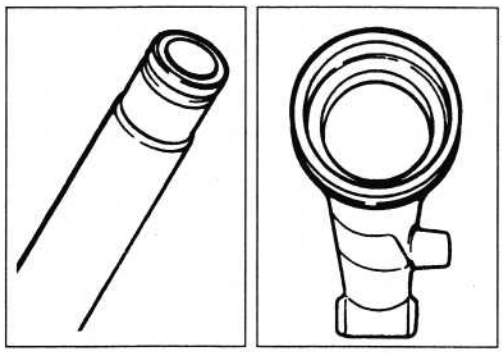

FORK SPRING

Measure the fork spring free length.
If it is shorter than the service limit, replace it with a new one.

DATA **Fork spring free length**
Service Limit: 308 mm (12.13 in)

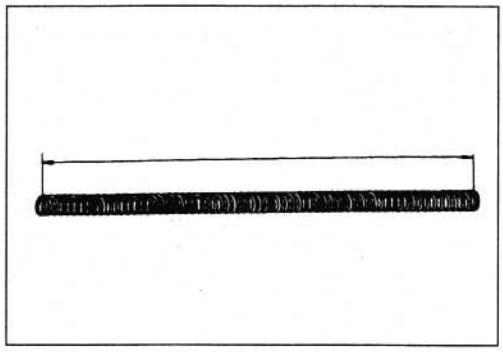

REASSEMBLY AND REMOUNTING

Reassemble and remount the front fork in the reverse order of removal and disassembly. Pay attention to the following points:

- Hold the inner tube vertically and clean the metal groove and install the slide metal ① by hand as shown.

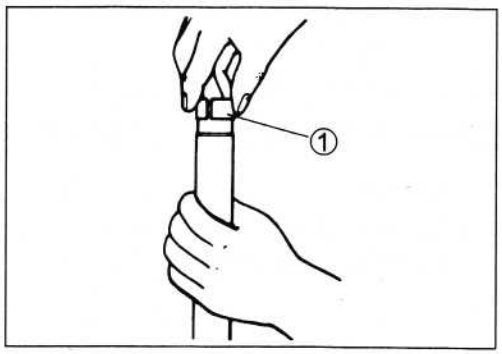

▲ CAUTION

Use special care to prevent damage to the "Teflon" coated surface of the inner tube slide metal when mounting it.

- Install the rebound spring and the damper rod to the inner tube.

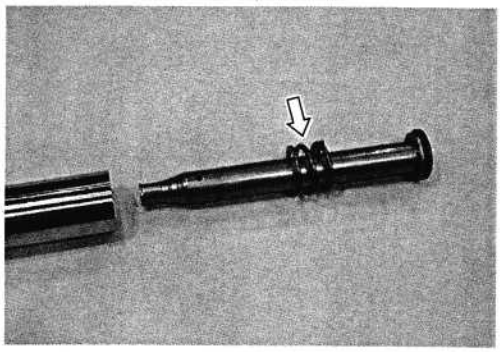

- Install the oil lock piece ② to the damper rod.

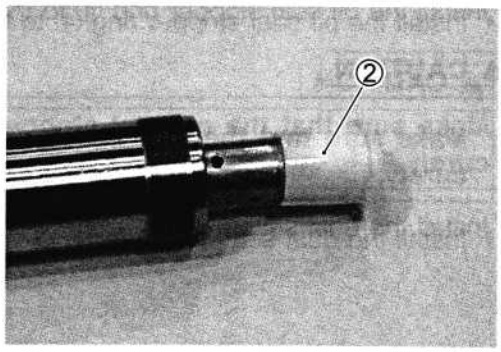

- Hold the caliper mounting portion Ⓐ by vise and install the inner tube into the outer tube.

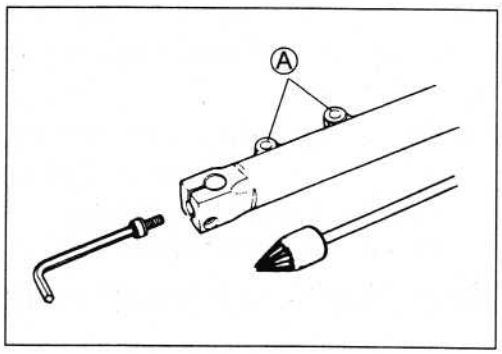

- Apply THREAD LOCK "1342" to the damper rod bolt and tighten it to the specified torque with the special tool.

1342 99000-32050: THREAD LOCK "1342"

TOOL 09940-34520: "T" handle
09940-34531: Attachment "A"

Damper rod bolt: 30 N·m (3.0 kgf·m, 21.5 lb-ft)

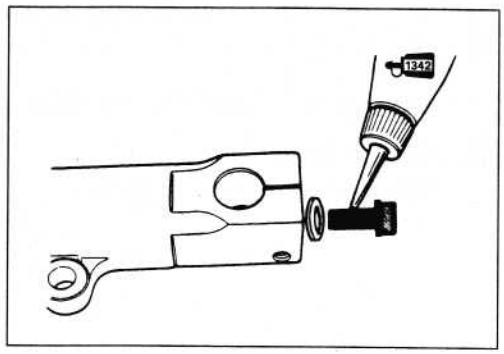

▲ CAUTION

Use a new damper rod gasket to prevent oil leakage.

- Install the outer tube slide metal, the washer and the oil seal using the special tool.
- Apply fork oil to the oil seal lip.

TOOL 09940-52861: Front fork oil seal installer

① Oil seal
② Oil seal retainer
③ Outer tube slide metal

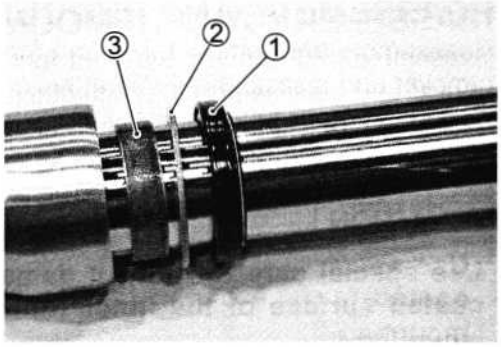

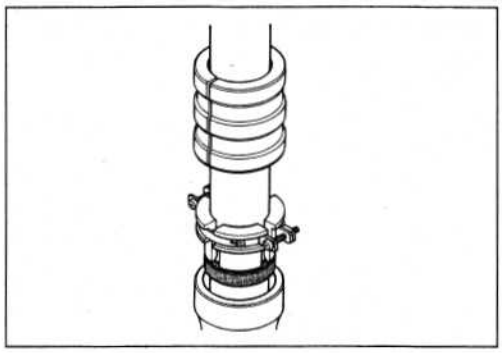

- Install the oil seal stopper ring ④ to the outer tube.

▲ CAUTION

Make sure that the oil seal stopper ring ④ fitted securely.

- Install the dust seal ⑤.

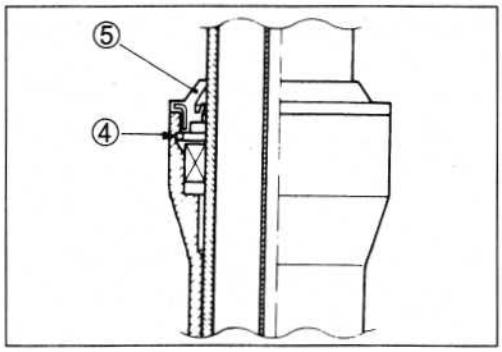

- Pour the specified fork oil into the inner tube.
- Move the inner tube slowly until bubbles do not come out from oil.

DATA Fork oil type: SUZUKI FORK OIL G10 (#10) or equivalent fork oil
Fork oil capacity (each leg):
491 ml (16.6/17.3 US/Imp oz)

FORK 99000-99044-10G: SUZUKI FORK OIL G10

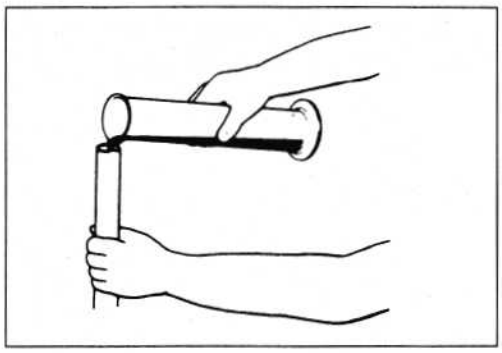

- Compress the inner tube fully.
- Hold the front fork vertically and adjust fork oil level with the special tool.

TOOL 09943-74111: Front fork oil level gauge

DATA Fork oil level
Standard: 102 mm (4.02 in)

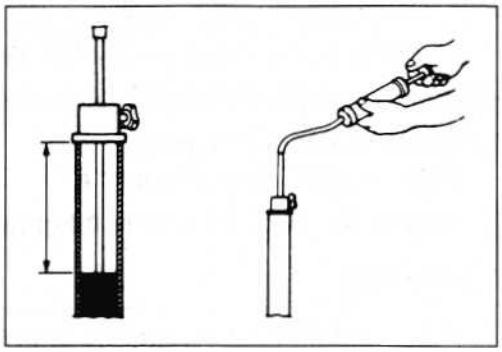

- Install the fork spring.

- Install the spring washer ① and the spacer ②.

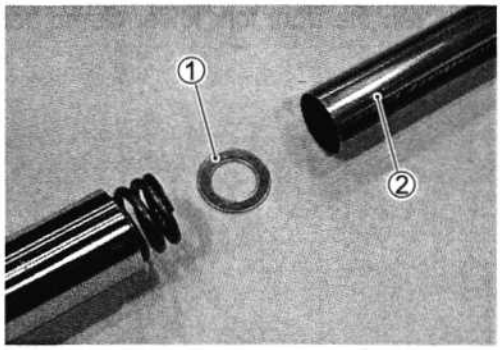

- Install the O-ring to the front fork cap bolt.
- Apply fork oil lightly to the O-ring.

▲ CAUTION

Use a new O-ring to prevent oil leakage.

- Install the from fork cap bolt to the inner tube temporarily.

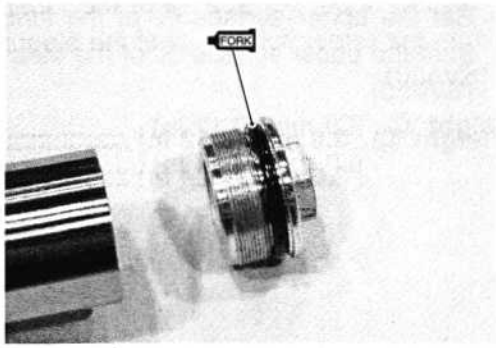

- Install the front fork and tighten the front fork lower clamp bolt temporarily.
- Tighten the front fork cap bolt to the specified torque.

Front fork cap bolt: 23 N·m (2.3 kgf·m, 16.5 lb-ft)

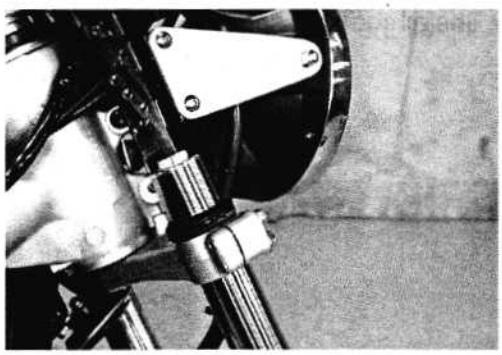

- Loosen the front fork lower clamp bolt.

- Set the upper surface Ⓐ of the inner tube at the height Ⓒ from the upper surface Ⓑ of the steering stem upper bracket. (SV650)

Height Ⓒ : 3.0 mm (0.12 in) ..... For E-03, 33
: 6.0 mm (0.24 in) ..... For the others

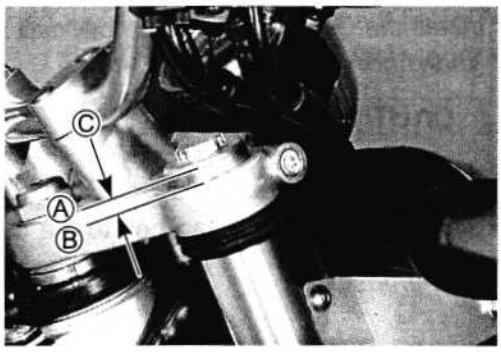

- Tighten the front fork upper clamp bolts and the lower clamp bolts.

Front fork upper clamp bolt: 23 N·m (2.3 kgf·m, 16.5 lb-ft)
Front fork lower clamp bolt: 23 N·m (2.3 kgf·m, 16.5 lb-ft)

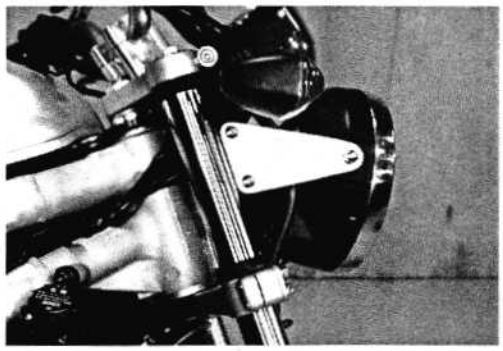

- Install the front fender. (☞ 6-3)
- Install the front wheel. (☞ 6-9)
- Install the brake caliper. (☞ 6-50)

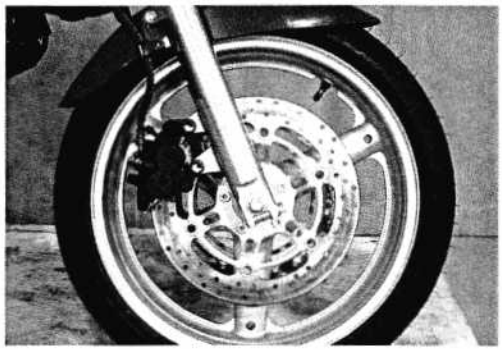

STEERING

CONSTRUCTION

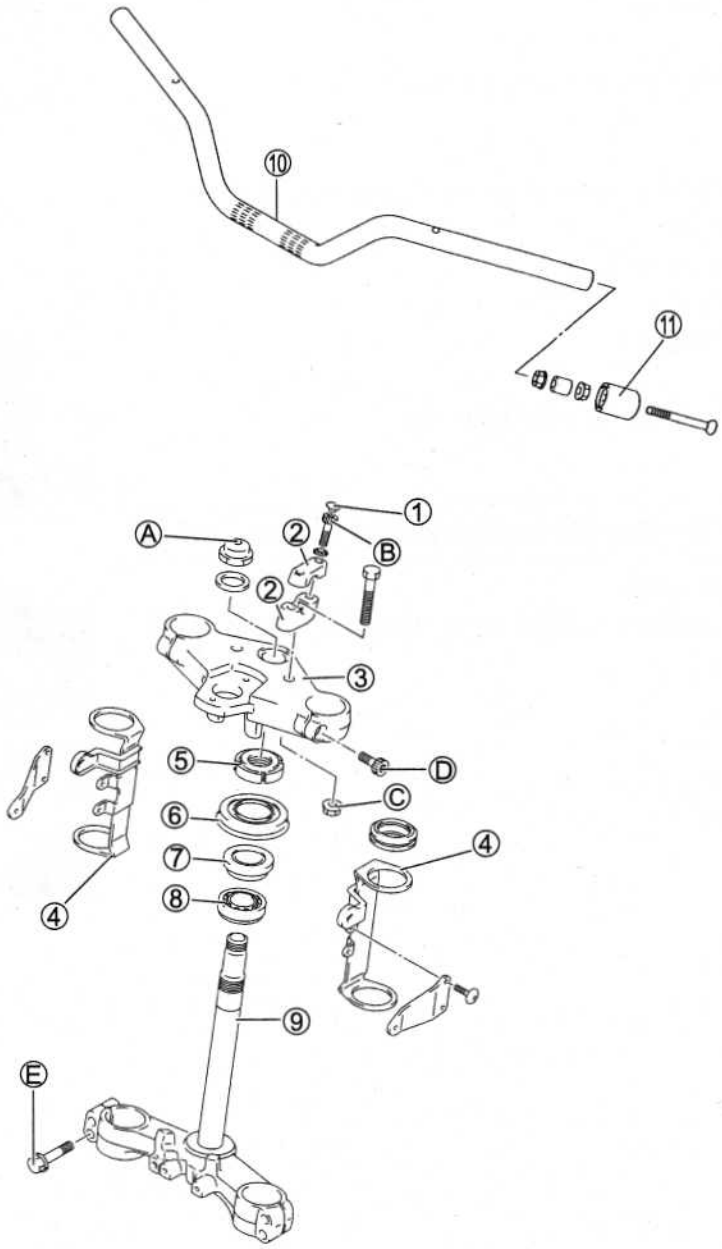

ITEM	N·m	kgf·m	lb-ft
Ⓐ	65	6.5	47.0
ⒷⒹ	23	2.3	16.5
Ⓔ	23	2.3	16.5
Ⓒ	45	4.5	32.5

① Handlebar holder bolt cap
② Handlebar holder
③ Steering stem upper bracket
④ Headlight housing holders
⑤ Steering stem nut
⑥ Dust seal
⑦ Steering stem upper bearing
⑧ Steering stem lower bearing
⑨ Steering stem
⑩ Handlebar
⑪ Handlebar balancer

Ⓐ Steering stem head nut
Ⓑ Handlebar clamp bolt
Ⓒ Handlebar holder nut
Ⓓ Front fork upper clamp bolt
Ⓔ Front fork lower clamp bolt

HANDLEBARS

REMOVAL

- Remove the following items from the left handlebar.
  ① Rear view mirror
  ② Left handlebar switch
  ③ Handlebar balancer
  ④ Grip rubber
  ⑤ Clutch cable/Clutch lever holder

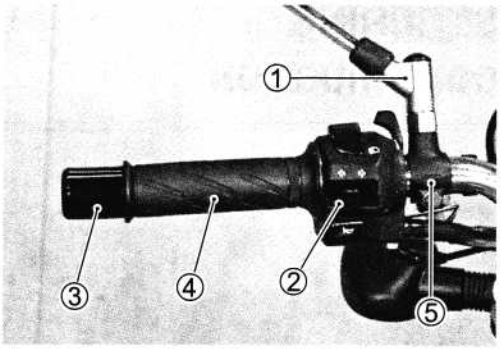

- Remove the following items from the right handlebar.
  ⑥ Rear view mirror
  ⑦ Right handlebar switch
  ⑧ Throttle cables
  ⑨ Handlebar balancer
  ⑩ Throttle grip
  ⑪ Front brake master cylinder/reservoir

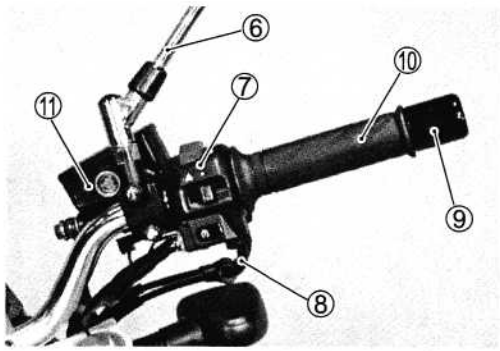

⚠ CAUTION

Do not turn the front brake master cylinder upside down.

- Remove the bolt caps.
- Remove the handlebar clamp bolts and then remove the handlebars.

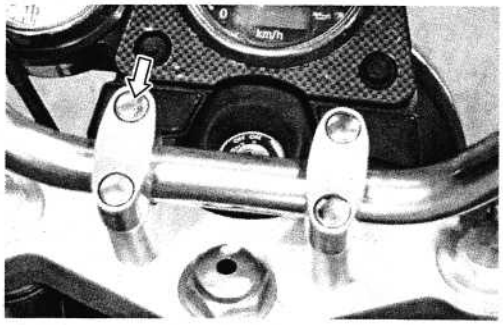

INSTALLATION

- Install the handlebars with the punched mark aligned with the handlebar clamp as shown.

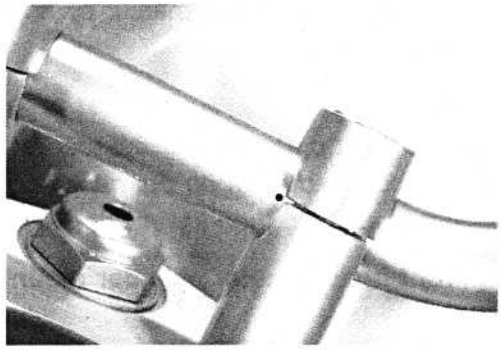

- The gap Ⓐ between the handlebar clamps should be even.

Handlebar clamp bolt: 23 N·m (2.3 kgf·m, 16.5 lb-ft)

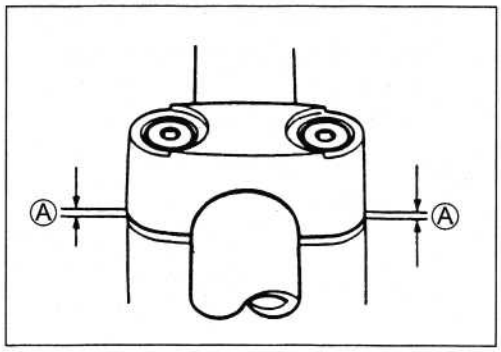

- Install the following items to the right handlebar.
  ① Front brake master cylinder/reservoir
  ② Throttle grip
  ③ Handlebar balancer
  ④ Throttle cables
  ⑤ Right handlebar switch
  ⑥ Rear view mirror

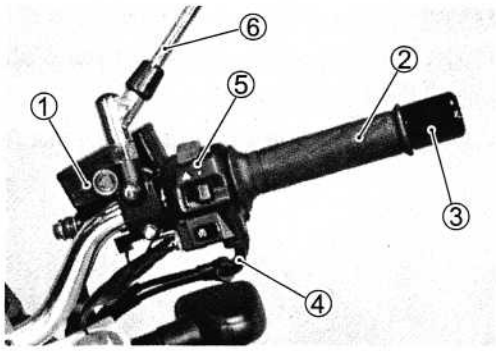

NOTE:

* *Apply grease to the throttle cable and the cable drum.*

99000-25030: SUZUKI SUPER GREASE "A"

* *Align the portion Ⓐ of the right handlebar switch with the hole Ⓑ of the handlebar.*
* *Adjust the throttle cable play. (☞ 2-16)*

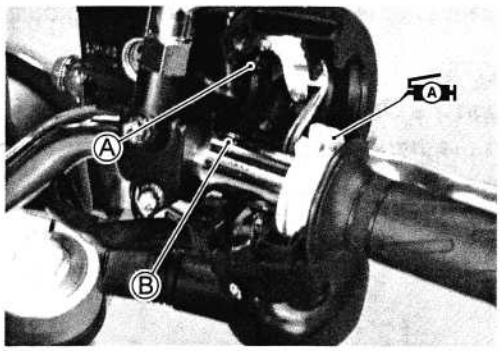

- Tighten the front brake master cylinder mounting bolts to the specified torque.

NOTE:
Align the front brake master cylinder holder's matching surface with the punched mark on the handlebar and tighten the upper mounting bolt first, then lower one.

Front brake master cylinder mounting bolt: 10 N·m (1.0 kgf·m, 7.0 lb-ft)

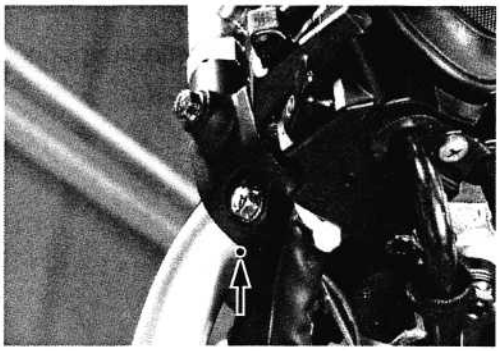

- Install the following items to the left handlebar.
  ① Clutch cable/Clutch lever holder
  ② Grip rubber
  ③ Handlebar balancer
  ④ Left handlebar switch
  ⑤ Rear view mirror

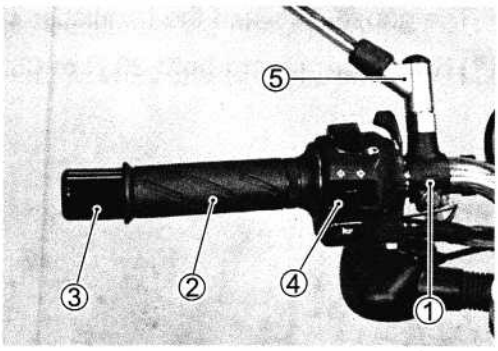

NOTE:
* *Align the portion Ⓐ of the left handlebar switch with the hole Ⓑ of the handlebar.*
* *Lightly adhere the grip rubber to the handlebar.*

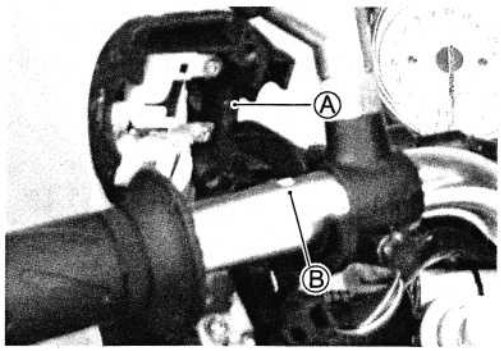

- Tighten the clutch holder mounting bolt to the specified torque.

NOTE:
Align the clutch holder's matching surface with the punched mark on the handlebar.

Clutch holder mounting bolt: 10 N·m (1.0 kgf·m, 7.0 lb-ft)

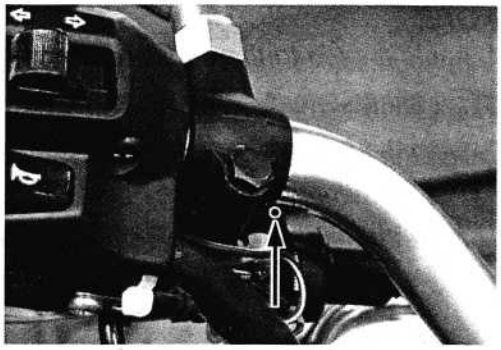

STEERING REMOVAL

- Remove the front wheel. (☞ 6-7)
- Remove the headlight and its housing.

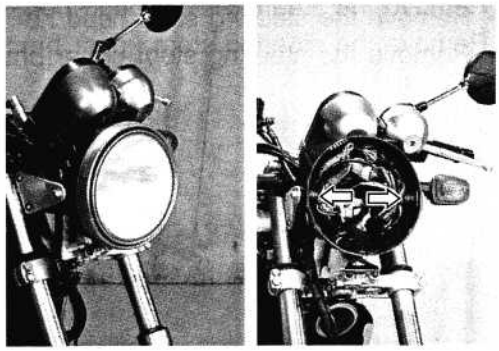

- Remove the brake hose joint.
- Remove the front brake assembly.

⚠ CAUTION

Do not turn the front brake master cylinder upside down.

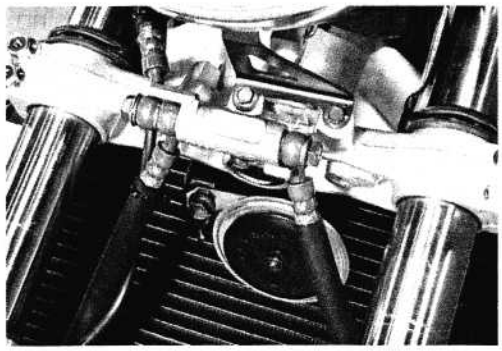

- Loosen the handlebar holder nuts.
- Remove the handlebars. (☞ 6-20)
- Remove the lower side handlebar holders.

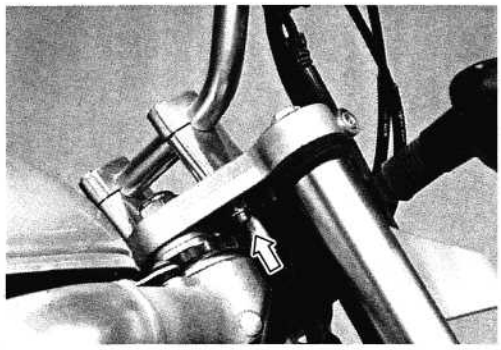

- Remove the speedometer assembly.
- Remove the horn.

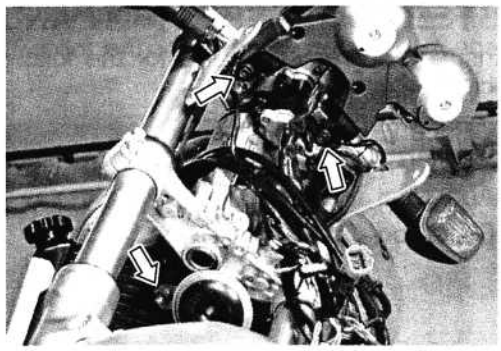

- Remove the front fork. (☞ 6-12)
- Remove the headlight housing bracket.

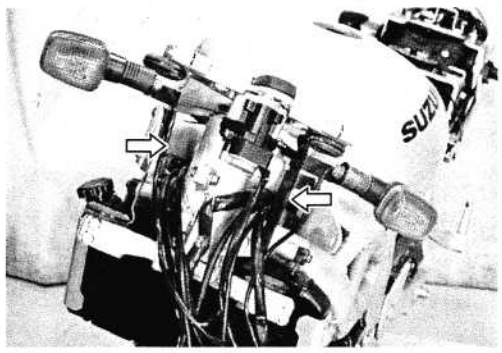

- Remove the steering stem head nut.
- Remove the steering stem upper bracket.

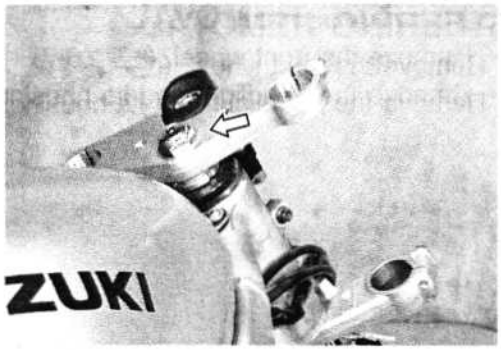

- Remove the steering stem nut using the special tool.

TOOL 09940-14911: Steering stem nut wrench

NOTE:
Hold the steering stem lower bracket to prevent it from falling.

- Remove the steering stem.
- Remove the dust seal, the inner race and the bearing.

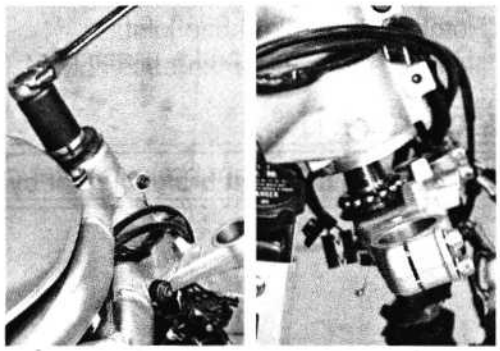

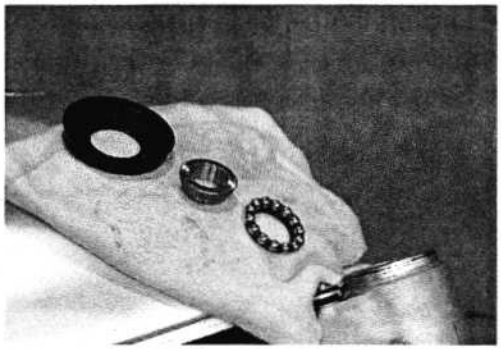

STEERING INSPECTION AND DISASSEMBLY

Inspect the removal parts for the following abnormalities.

* Handlebars distortion
* Race wear and brinelling
* Bearing wear or damage
* Abnormal noise of bearing
* Distortion of steering stem

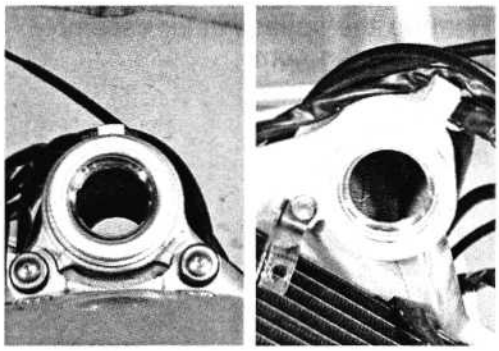

- Remove the steering stem lower bearing inner race with a chisel.

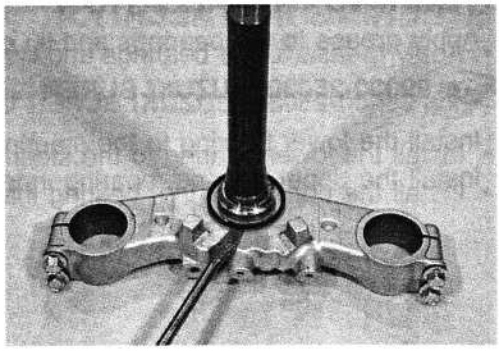

⚠ CAUTION

The removed bearing inner race must be replaced with a new one.

- Drive out the steering stem upper and lower bearing races with the special tool.

TOOL 09941-54911: Bearing outer race remover ①
09941-74911: Steering bearing installer ②

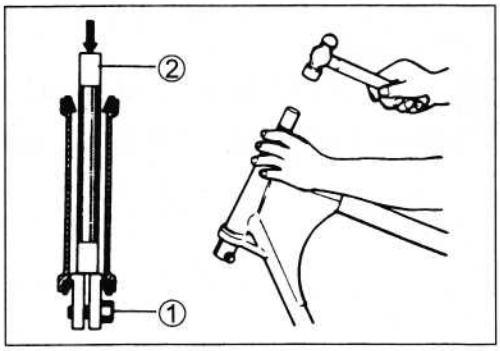

- Press in the upper and lower bearing outer races with the special tools.

TOOL 09941-34513: Steering outer race installer

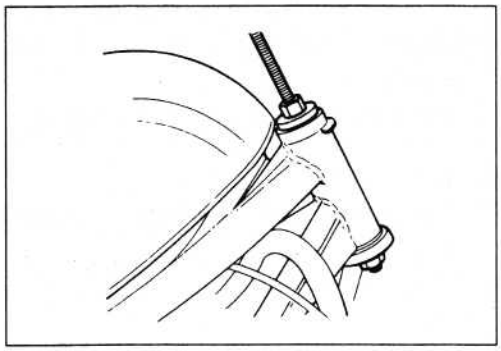

- Press in the lower bearing inner race and dust seat with the special tool.

TOOL 09941-74911: Steering bearing installer

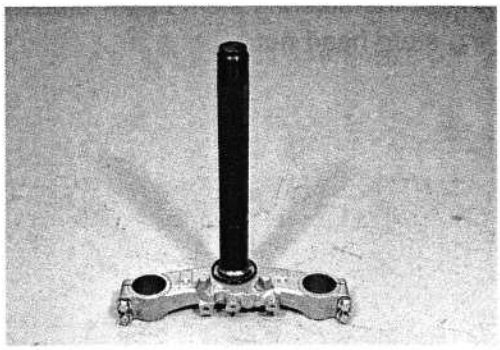

STEERING INSTALLATION

- Apply grease to the bearings and lip of dust seal.

99000-25030: SUZUKI SUPER GREASE "A"

- Install the lower bearing to the steering stem lower bracket.
- Install the upper bearing, bearing inner race and dust seal.

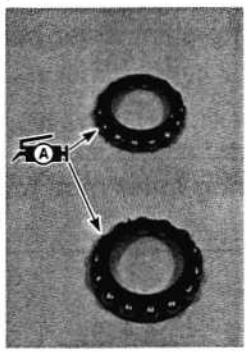

- Tighten the steering stem nut to the specified torque with the special tools.

09940-14911: Steering stem nut wrench

Steering stem nut: 45 N·m (4.5 kgf·m, 32.5 lb-ft)

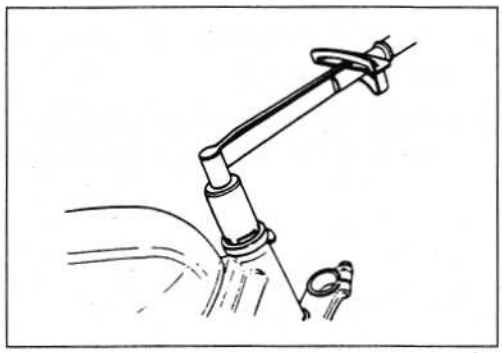

- Turn the steering stem lower bracket about five or six times to the left and right so that the angular ball bearings will be seated properly.
- Loosen the stem nut by 1/4 – 1/2 turn.

NOTE:
This adjustment will vary from motorcycle to motorcycle.

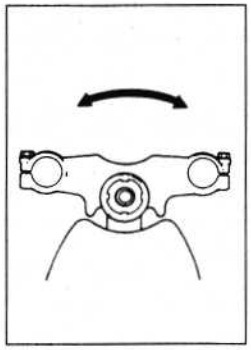

- Install the steering stem upper bracket and tighten the steering stem head nut.

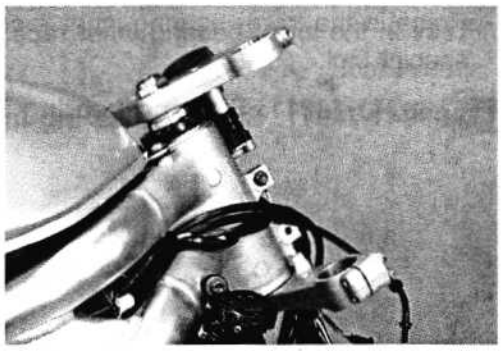

- Install the front fork with the headlight housing bracket. (☞ 6-18)

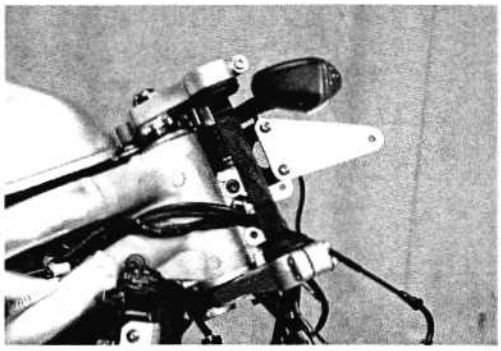

- Tighten the steering stem head nut to the specified torque.

Steering stem head nut: 65 N·m (6.5 kgf·m, 47.0 lb-ft)

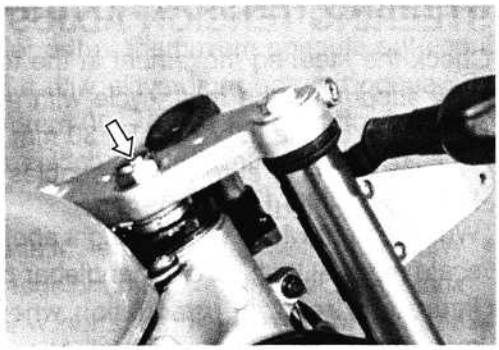

- Install the horn.
- Install the speedometer assembly.

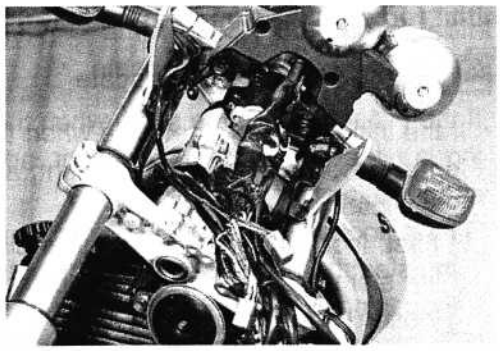

- Install the handlebar holders temporarily.
- Install the handlebars. (☞ 6-21)
- Tighten the handlebar holder nut to the specified torque.

Handlebar holder nut: 45 N·m (4.5 kgf·m, 32.5 lb-ft)

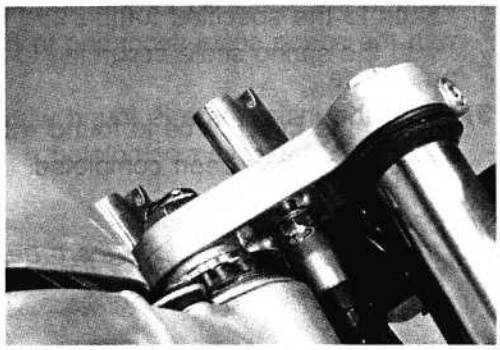

- Install the front brake assembly. (☞ 6-18)

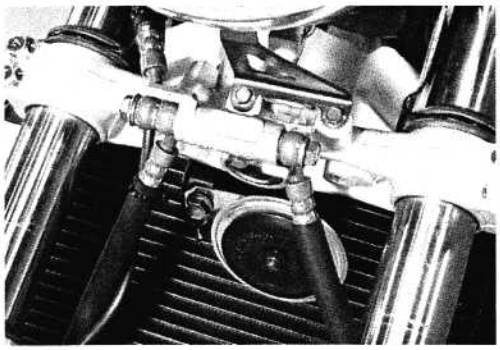

- Install the headlight housing and the headlight.
- Install the front wheel. (☞ 6-10)

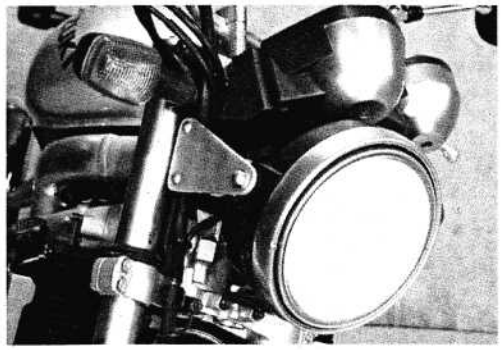

STEERING TENSION ADJUSTMENT

Check the steering movement in the following procedure.

- By supporting the motorcycle with a jack, lift the front wheel until it is off the floor by 20 – 30 mm (0.8 – 1.2 in).
- Check to make sure that the cables and wire harnesses are properly routed. (☞ 8-13)
- With the front wheel in the straight ahead state, hitch the spring scale (special tool) on one handlebar grip end as shown in the figure and read the graduation when the handlebar starts moving. Do the same on the other grip end.

Initial force: 200 – 500 grams

TOOL 09940-92720: Spring scale

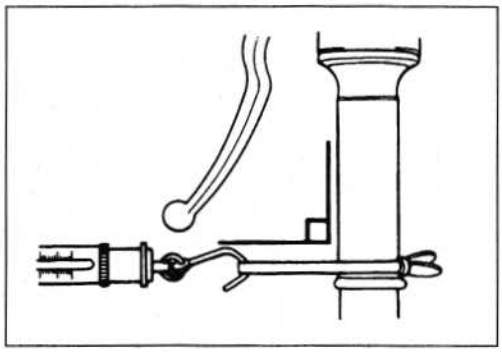

- If the initial force on the scale when the handlebar starts turning is either too heavy or too light, adjust it till it satisfies the specification.
  1) First, loosen the front fork lower clamp bolts and the steering stem head nut, and then adjust the steering stem nut by loosening or tightening it.
  2) Tighten the steering stem head nut and front fork lower clamp bolts to the specified torque and re-check the initial force with the spring scale according to the previously described procedure.
  3) When the initial force is found within the specified range, adjustment has been completed.

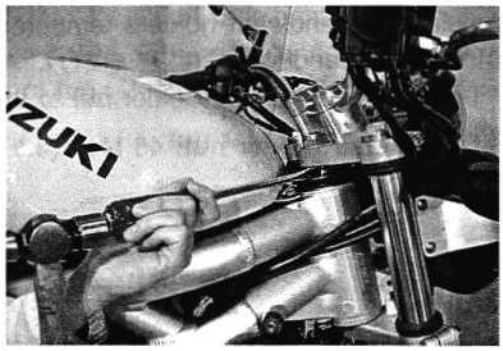

NOTE:
Hold the front fork legs, move them back and forth and make sure that the steering is not loose.

REAR WHEEL

CONSTRUCTION

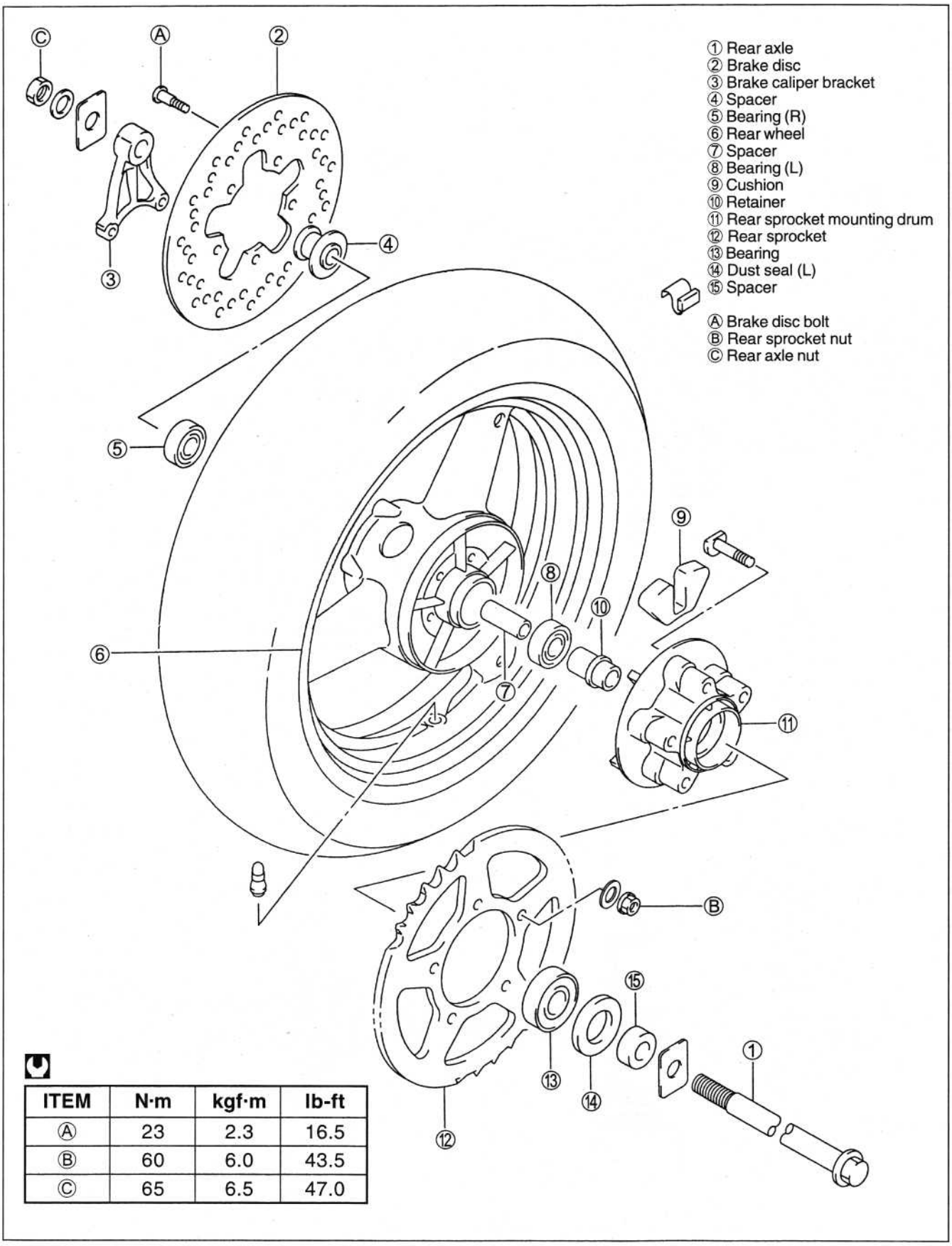

ITEM	N·m	kgf·m	lb-ft
Ⓐ	23	2.3	16.5
Ⓑ	60	6.0	43.5
Ⓒ	65	6.5	47.0

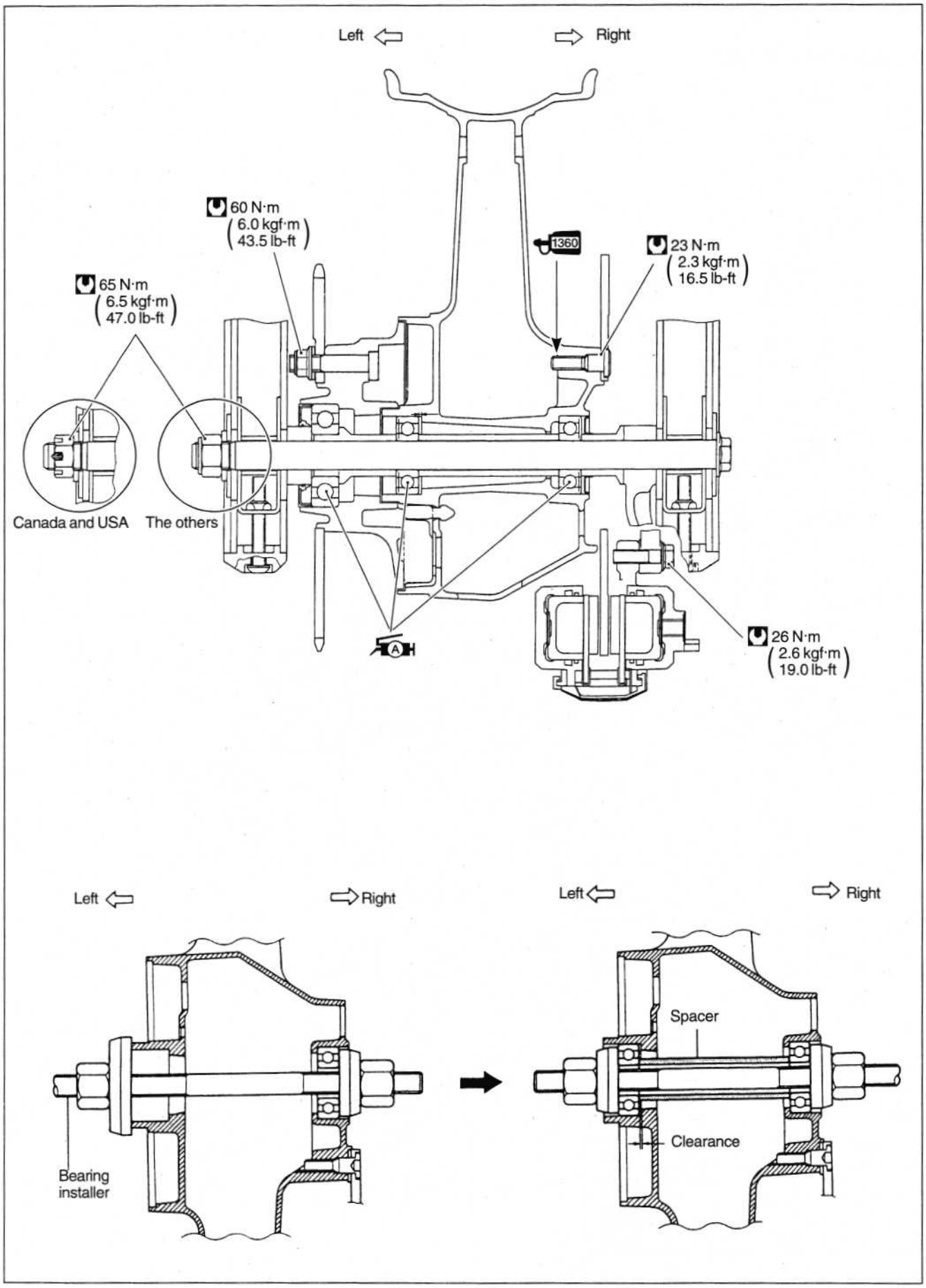
Left
Right
60 N·m
(6.0 kgf·m
43.5 lb-ft)
1360
23 N·m
(2.3 kgf·m
16.5 lb-ft)
65 N·m
(6.5 kgf·m
47.0 lb-ft)
Canada and USA
The others
A
26 N·m
(2.6 kgf·m
19.0 lb-ft)
Left
Right
Bearing
installer
Left
Right
Spacer
Clearance

REMOVAL

- Remove the rear wheel by removing the following items.
  ① Rear brake caliper mounting bolts/Brake hose clamp
  ② Rear axle/nut
  ③ Chain case
  ④ Chain adjuster

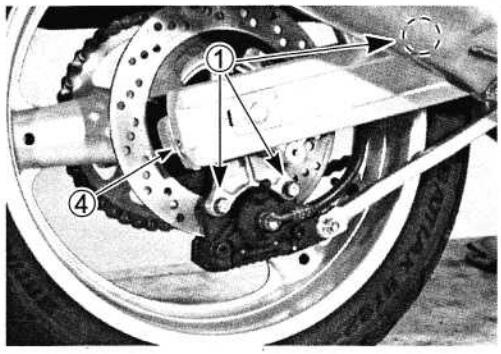

NOTE:

* *Be careful not to damage the engine or fram by a jack.*
* *Before raising the rear wheel off the ground with a jack, loosen each bolt.*
* *Do not operate the brake lever while dismounting the rear wheel.*

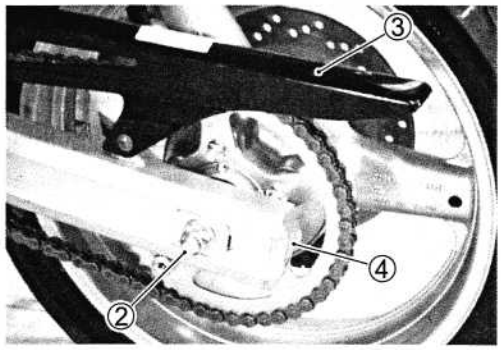

DISASSEMBLY

- Remove the spacer.
- Remove the oil seal with the special tool.

TOOL 09913-50121: Oil seal remover

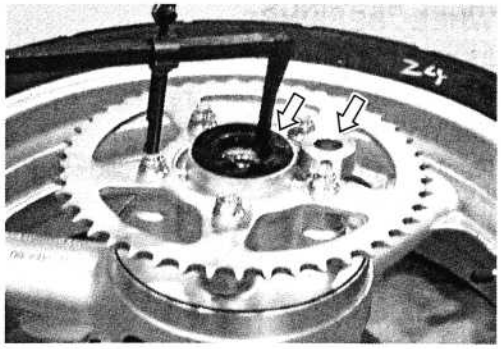

- Draw out the rear sprocket mounting drum from the wheel hub.
- Remove the rear sprocket mounting drum retainer and wheel damper.
- Separate the rear sprocket from its mounting drum by removing nuts.

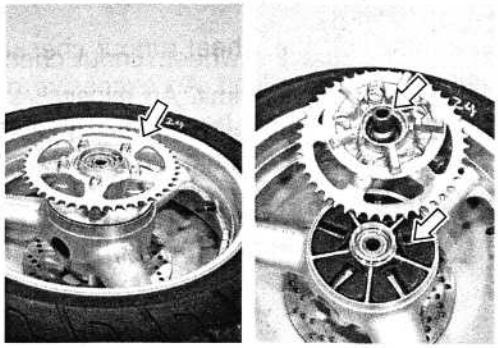

- Insert the adaptor ① into the wheel bearing.
- After inserting the wedge bar from the opposite side, lock the wedge bar ② in the slit of the adaptor.
- Drive out both wheel bearings by striking the wedge bar.

TOOL 09941-50111: Bearing remover

⚠ CAUTION

The removed bearings must be replaced with new ones.

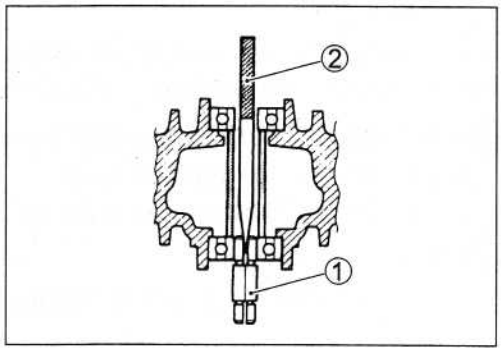

- Remove the rear brake disc.

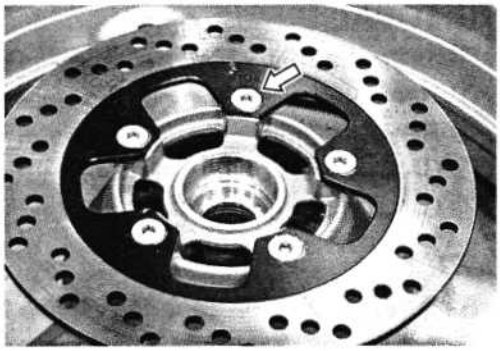

INSPECTION

WHEEL DAMPER

Inspect the damper for wear and damage.
Replace the damper if there is anything unusual.

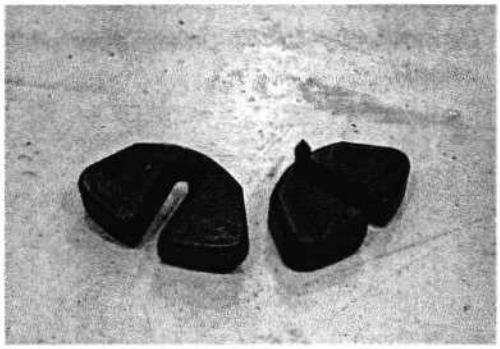

WHEEL BEARINGS

Inspect the play of the wheel bearings by finger while they are in the wheel. Rotate the inner race by finger to inspect for abnormal noise and smooth rotation.
Replace the bearing in the following procedure if there is any thing unusual.

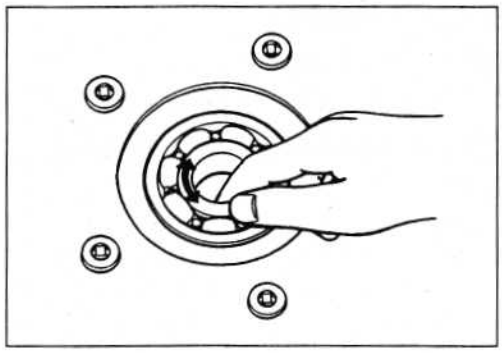

REAR WHEEL

Make sure that the wheel runout checked as shown does not exceed the service limit. An excessive runout is usually due to worn or loosen wheel bearings. If bearing replacement fails to reduce the runout, replace the wheel.

DATA Wheel rim runout (Axial and Radial)
Service Limit: 2.0 mm (0.08 in)

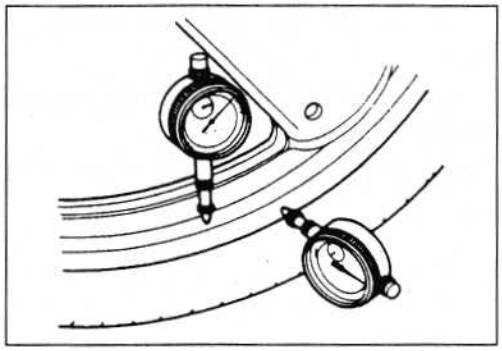

REAR AXLE

Using a dial gauge, check the rear axle for runout.
If the runout exceeds the limit, replace the rear axle.

TOOL 09900-20606: Dial gauge (1/100 mm)
09900-20701: Magnetic stand
09900-21304: V-block set (100 mm)

DATA Rear axle runout
Service Limit: 0.25 mm (0.010 in)

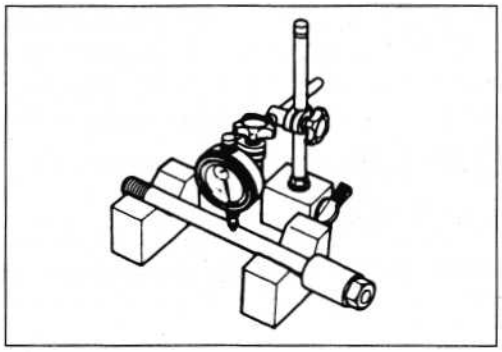

BRAKE DISC

Visually check the brake disc for damage or cracks.
Measure the thickness with a micrometer.
Replace the disc if the thickness is less than the service limit or if damage is found.

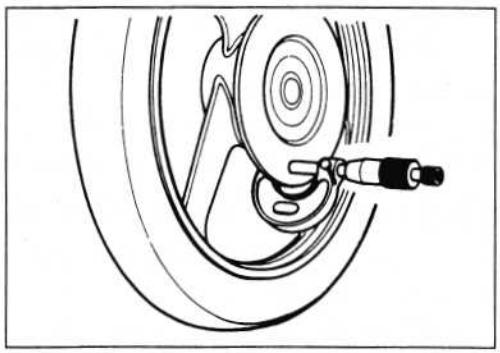

DATA Brake disc thickness (Rear)
Service Limit: 4.5 mm (0.18 in)

TOOL 09900-20205: Micrometer (0 – 25 mm)

Measure the runout with a dial gauge.
Replace the disc if the runout exceeds the service limit.

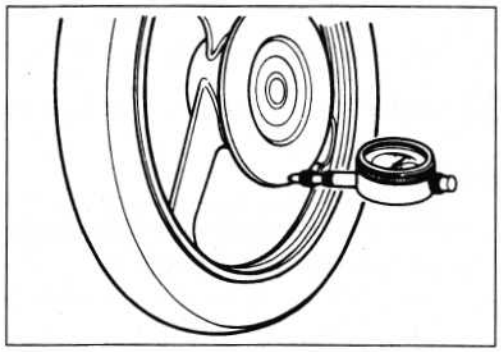

DATA Brake disc runout (Rear)
Service Limit: 0.30 mm (0.012 in)

TOOL 09900-20606: Dial gauge (1/100 mm)
09900-20701: Magnetic stand

SPROCKET

Inspect the sprocket teeth for wear. If they are worn as shown, replace the two sprockets and drive chain as a set.

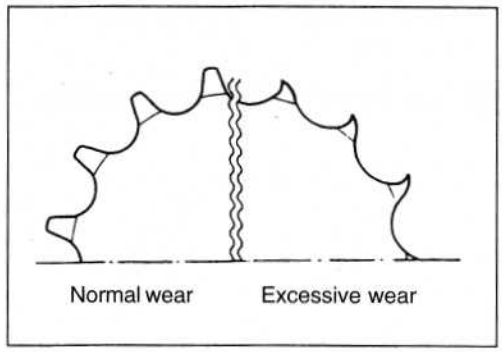

Tire

(☞ 2-25, 6-64)

REASSEMBLY AND REMOUNTING

Reassemble and remount the rear wheel in the reserve order of removal and disassembly.

Pay attention to the following points:

- Apply grease to the bearings before installing.

99000-25030: SUZUKI SUPER GREASE "A"

- Install the right side bearing using the special tool ①.
- Install the spacer.
- Install the left side bearing using the special tool ①.

NOTE:

The seal sides of bearings should face out side.

09924-84510: Bearing installer set

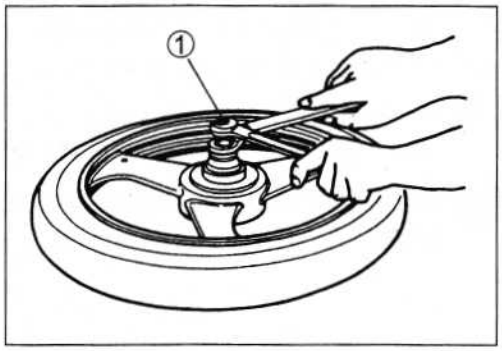

⚠ CAUTION

First install the right wheel bearing, then install the left wheel bearing. (☞ 6-30)

- Install the bearing into the sprocket mounting drum using the special tool.

09924-84530: Bearing installer

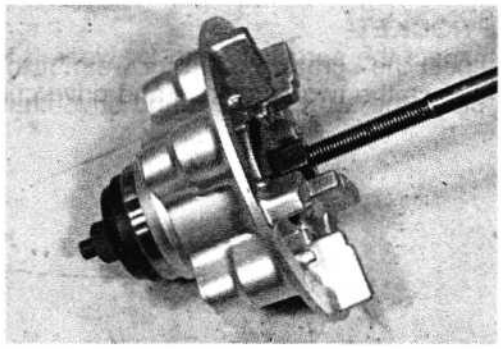

- Apply grease to the lip of the oil seal.

99000-25030: SUZUKI SUPER GREASE "A"

- Install the spacer.

⚠ CAUTION

Be careful not to damage the oil seal lip when installing the spacer.

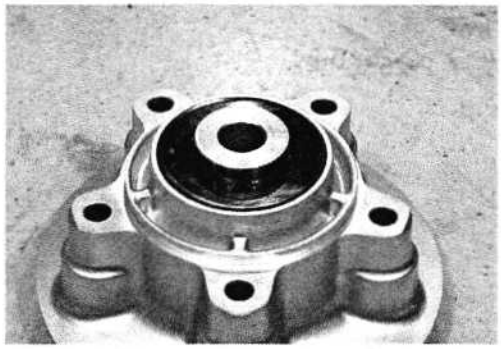

- Install the wheel damper.

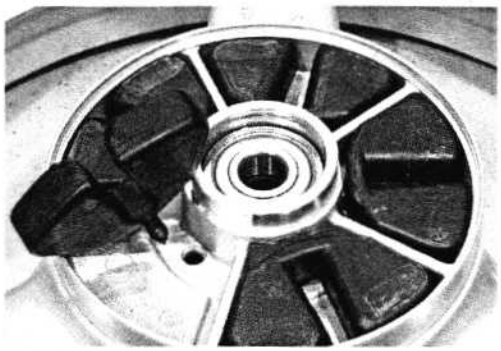

- After installing the wheel damper, apply grease to the rear wheel and the sprocket mounting drum.

99000-25030: SUZUKI SUPER GREASE "A"

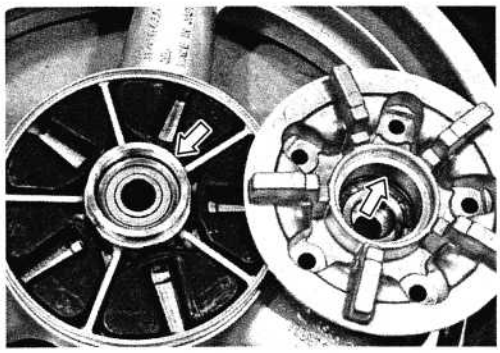

- Install the rear sprocket to the rear sprocket mounting drum and tighten its mounting nut temporarily.

NOTE:
Face the stamped mark on the sprocket to outside.

- Install the retainer to the rear sprocket mounting drum.

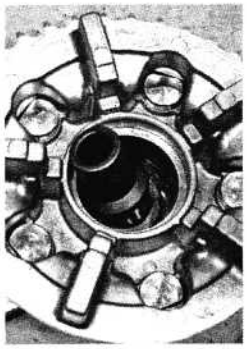

- Install the rear sprocket mounting drum to the wheel.
- Tighten the rear sprocket mounting nut to the specified torque.

Rear sprocket nut: 60 N·m (6.0 kgf·m, 43.5 lb-ft)

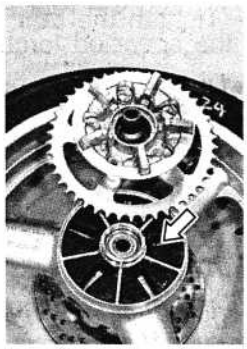

- Apply THREAD LOCK SUPER "1360" to the disc bolts and tighten them to the specified torque.

NOTE:
Make sure that the brake disc is clean and free of any grease matter.

99000-32130: THREAD LOCK SUPER "1360"

Brake disc bolt: 23 N·m (2.3 kgf·m, 16.5 lb-ft)

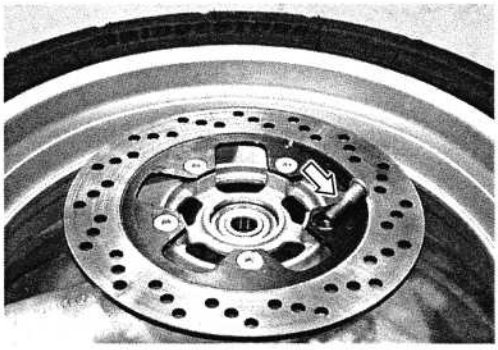

- Install the chain adjusters to the swingarm.

NOTE:
Face the "UP" mark of the chain adjuster.

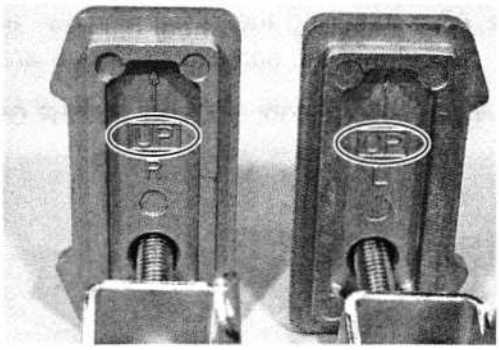

- Install the rear wheel.

NOTE:
* *Push the pistons all the way into the brake caliper and then remount the caliper.*
* *Before installing the rear axle, apply grease to it.*

99000-25030: SUZUKI SUPER GREASE "A"

- Adjust the chain slack. (☞ 2-21)

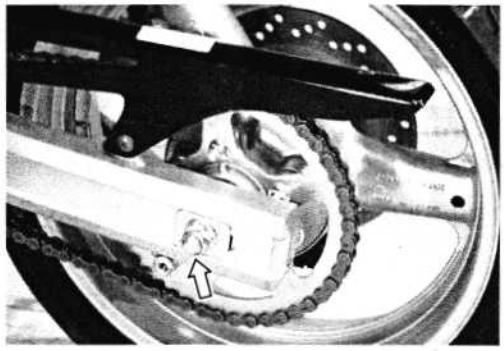

- Tighten the rear axle nut and rear caliper mounting bolts to the specified torque.

Rear axle nut: 65 N·m (6.5 kgf·m, 47.0 lb-ft)
Rear brake caliper mounting bolt: 26 N·m (2.6 kgf·m, 19.0 lb-ft)
Torque link nut: 35 N·m (3.5 kgf·m, 25.5 lb-ft)

NOTE:
After remounting the all items, pump the brake pedal a few times to check for proper brake operation.

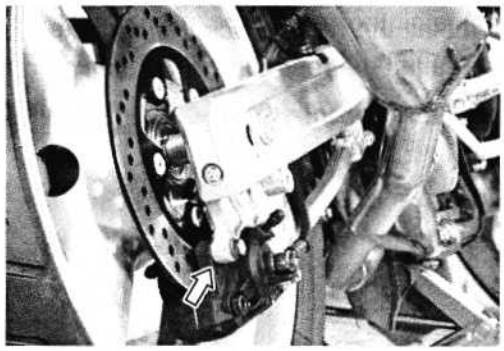

REAR SUSPENSION

CONSTRUCTION

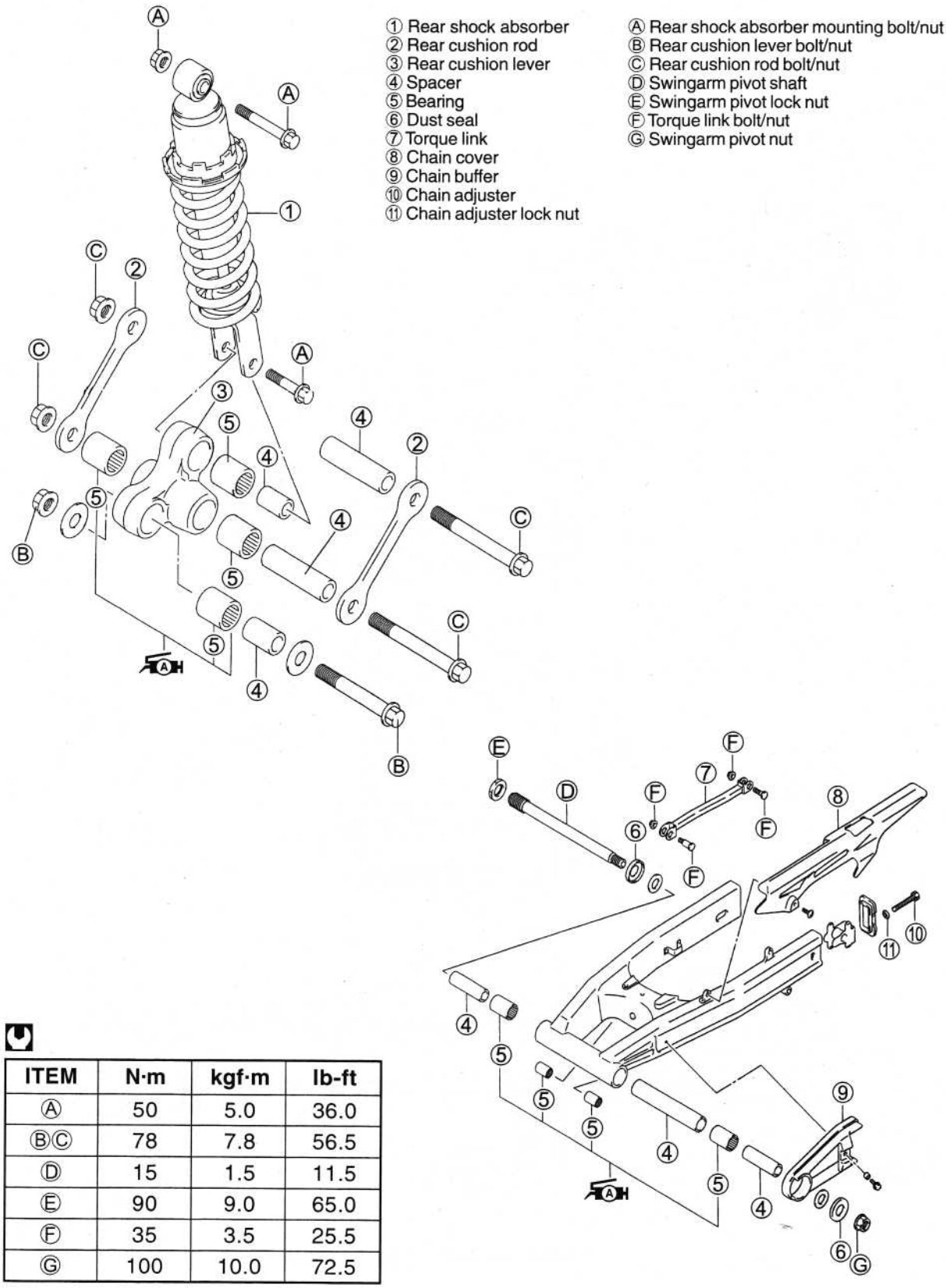

ITEM	N·m	kgf·m	lb-ft
Ⓐ	50	5.0	36.0
ⒷⒸ	78	7.8	56.5
Ⓓ	15	1.5	11.5
Ⓔ	90	9.0	65.0
Ⓕ	35	3.5	25.5
Ⓖ	100	10.0	72.5

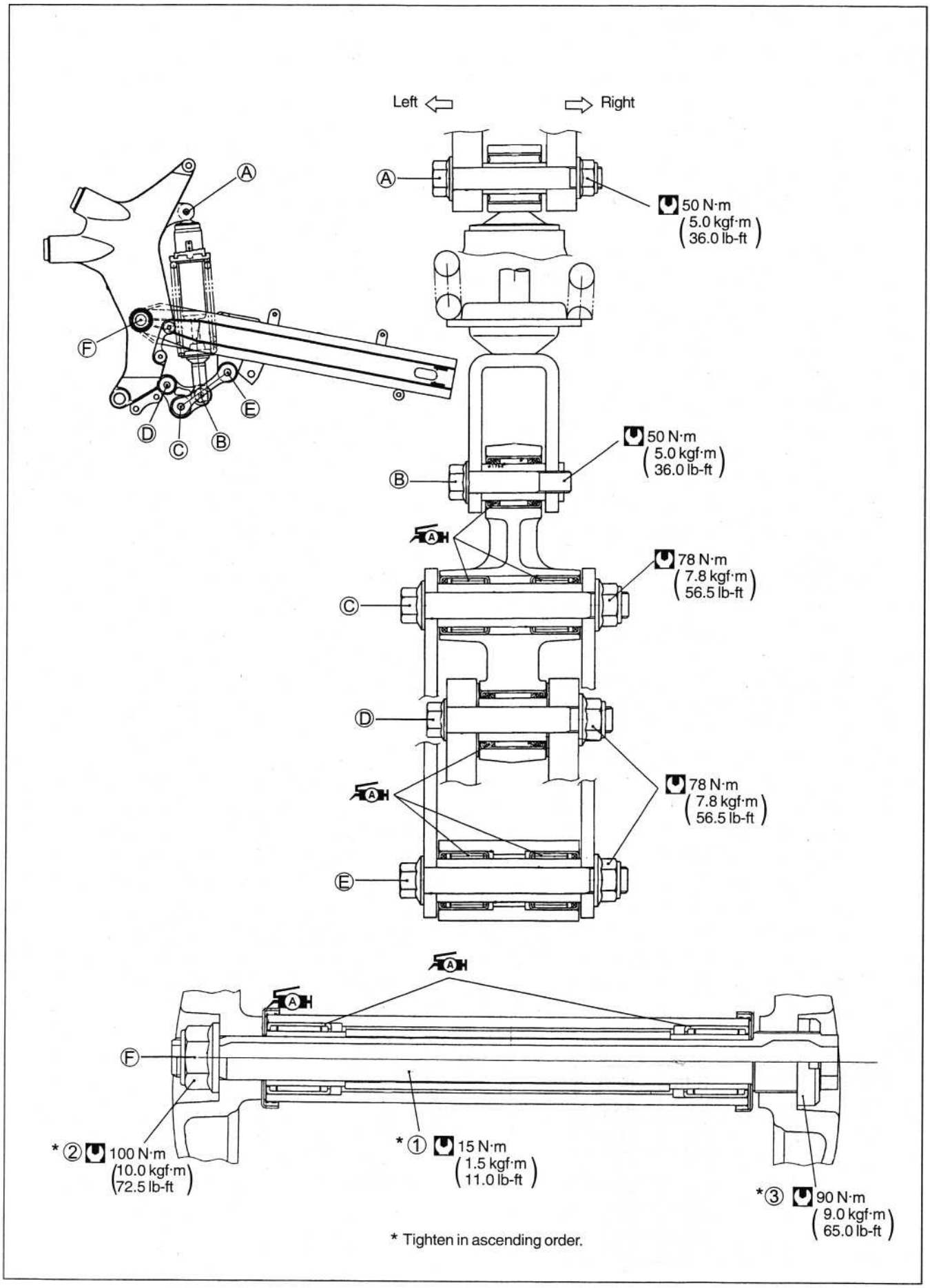
Left
Right
A
B
C
D
E
F
50 N·m
(5.0 kgf·m
36.0 lb-ft)
50 N·m
(5.0 kgf·m
36.0 lb-ft)
78 N·m
(7.8 kgf·m
56.5 lb-ft)
78 N·m
(7.8 kgf·m
56.5 lb-ft)
*② 100 N·m
(10.0 kgf·m
72.5 lb-ft)
*① 15 N·m
(1.5 kgf·m
11.0 lb-ft)
*③ 90 N·m
(9.0 kgf·m
65.0 lb-ft)
* Tighten in ascending order.

REAR SHOCK ABSORBER AND CUSHION ROD

REMOVAL

- Remove the front seat. (☞ 6-3)
- Remove the battery.
- Remove the fuel tank. (☞ 4-5)
- Remove the exhaust pipe/muffler. (☞ 3-6)

- Raise the rear wheel off the ground with a jack.

NOTE:

* *Be careful not to damage the engine or frame by a jack.*
* *Before raising the rear wheel off the ground with a jack, loosen each bolts of nuts.*

- Remove the cushion rod bolt sand nuts.
- Remove the rear shock absorber mounting bolt (Lower side).
- Remove the cushion lever.
- Remove the rear shock absorber by removing its mounting bolt (upper side).

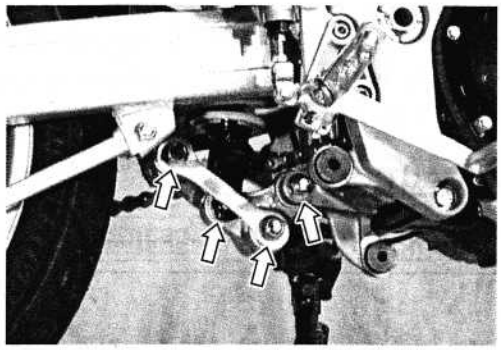

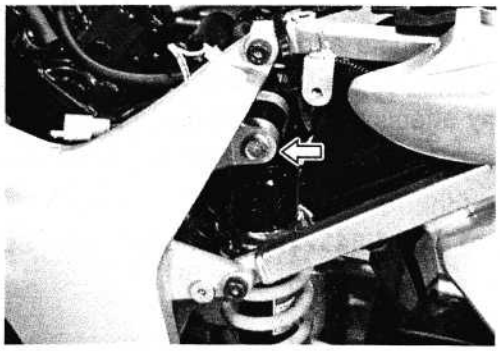

INSPECTION AND DISASSEMBLY

Spacer

- Remove the spacer from the cushion lever.

Inspect the spacers and washers for any flaws or other damage. If any defects are found, replace the spacers and washers with the new ones.

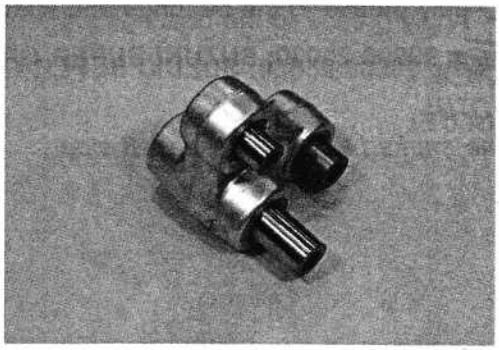

Bearing

Insert the spacers into each bearing and check the play to move the spacer up and down.

If an excessive play is noted, replace the bearing with a new one.

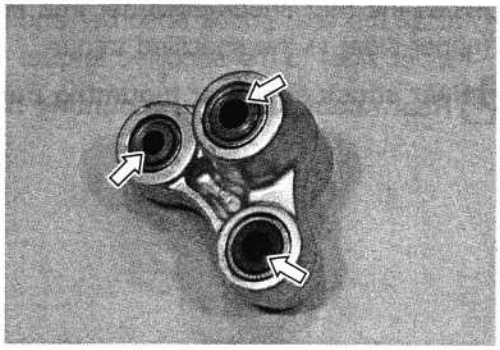

- Remove the bearings using the special tool.

TOOL 09921-20220: Bearing remover set

⚠ CAUTION

The removed bearings must be replaced with the new ones.

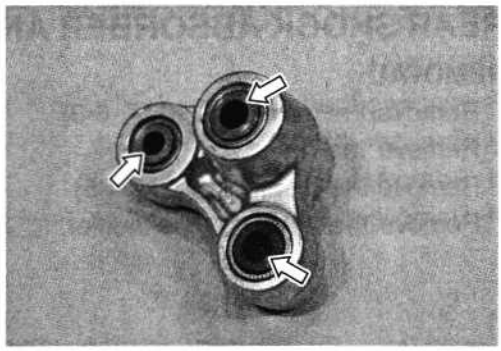

Rear shock absorber

Inspect the rear shock absorber unit for damage and oil leakage if any defects are found, replace the rear shock absorber unit with a new one.

⚠ CAUTION

Do not attempt to disassemble the rear shock absorber.

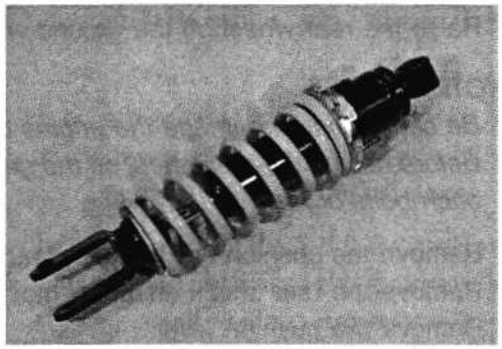

REASSEMBLY AND REMOUNTING

Reassemble and remount the rear shock absorber unit in the reverse order of removal and disassembly.

Pay attention to the following points:

- Install the bearings into the cushion lever using the special tool.

TOOL 09924-84521: Bearing installer set

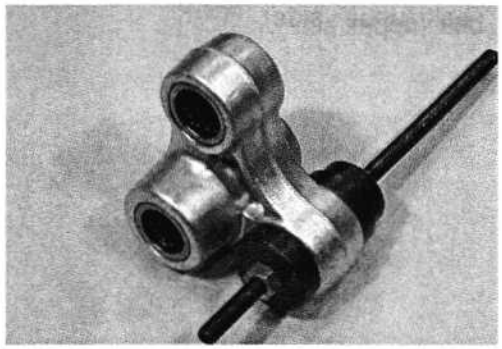

- Apply grease to the bearings and spacers.

A 99000-25030: SUZUKI SUPER GREASE "A"

NOTE:

The marked side must face left side.

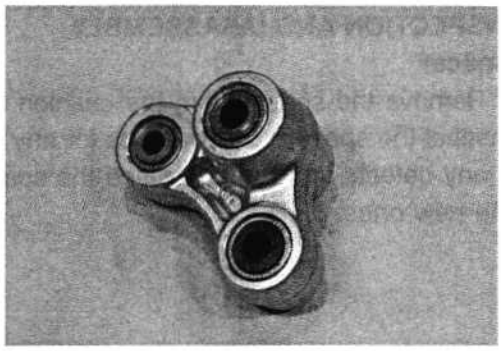

- Install the rear shock absorber and tighten its mounting nut (upper side) to the specified torque.

Rear shock absorber mounting nut: 50 N·m (5.0 kgf·m, 36.0 lb-ft)

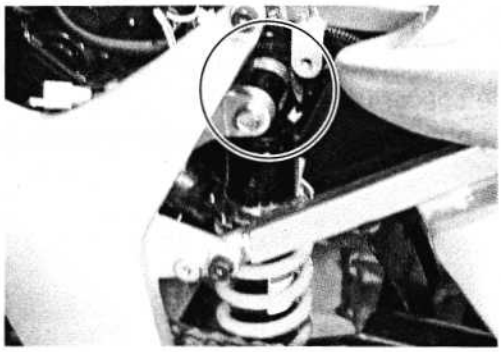

- Install the cushion lever and tighten each bolt and nut to the specified torque.

Rear shock absorber mounting bolt: 50 N·m (5.0 kgf·m, 36.0 lb-ft)
Rear cushion lever mounting nut: 78 N·m (7.8 kgf·m, 56.5 lb-ft)
Rear cushion rod mounting nut: 78 N·m (7.8 kgf·m, 56.5 lb-ft)

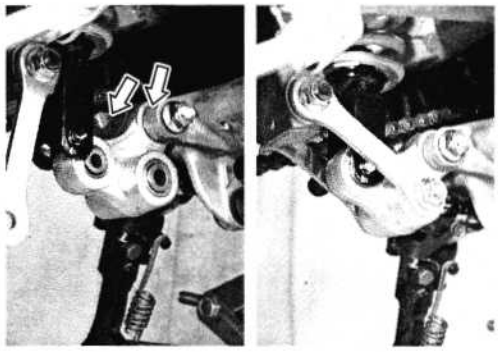

- Install the exhaust pipe/muffler. (☞ 3-18)
- Install the fuel tank. (☞ 4-6)
- Install the battery.
- Install the front and rear seat. (☞ 6-3)

SWINGARM

REMOVAL

- Remove the rear brake caliper. (☞ 6-57)
- Remove the rear wheel. (☞ 6-31)
- Remove the rear shock absorber and the cushion lever. (☞ 6-39)
- Remove the brake hose and the torque link.

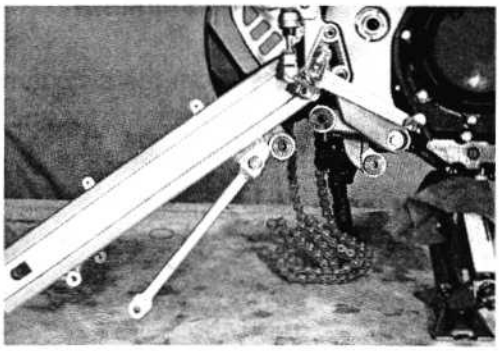

- Remove the swingarm pivot shaft lock nut using the special tool.

TOOL 09940-14940: Swingarm pivot shaft lock nut socket wrench

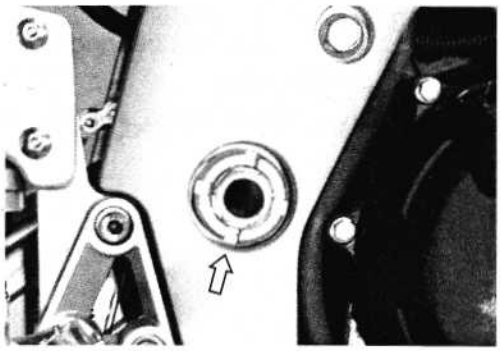

- Remove the pivot shaft nut.

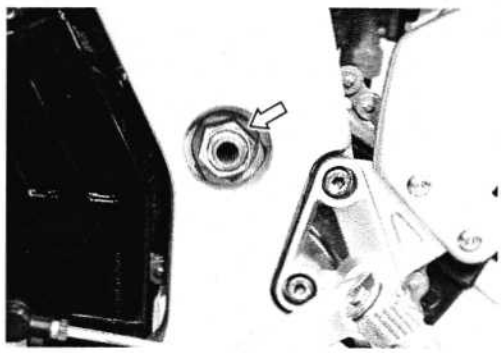

- Remove the swingarm.

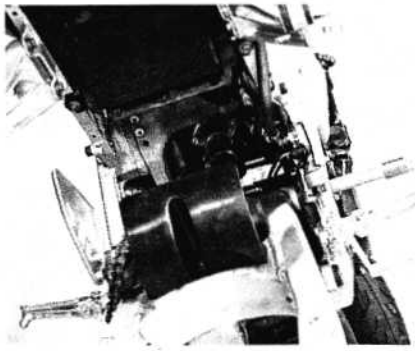

- Remove the dust seal washer, the chain buffer and the mud guard.

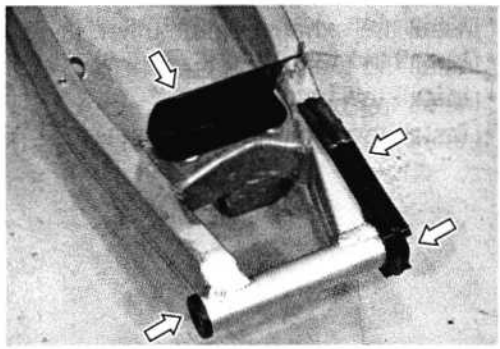

INSPECTION AND DISASSEMBLY

Spacer

- Remove the spacer from the swingarm.

Inspect the spacers and washers for any flaws or other damage. If any defects are found, replace the spacers and washers with the new ones.

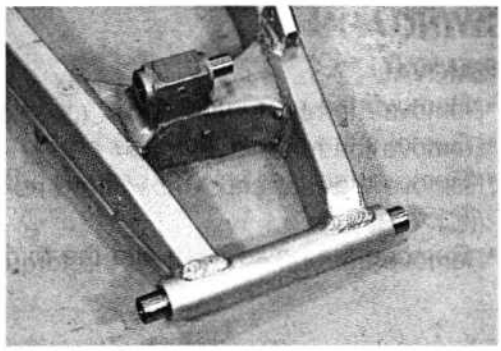

Bearing

Insert the spacers into each bearing and check the play to move the spacer up and down.

If an excessive play is noted, replace the bearing with a new one.

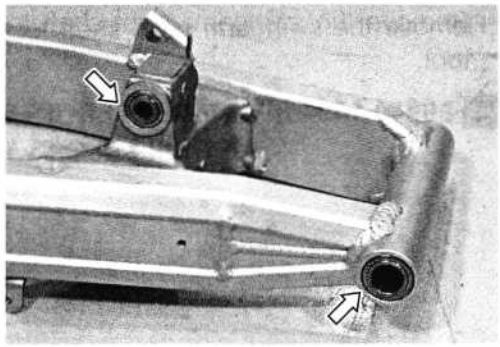

- Remove the bearings using the special tool.

TOOL 09921-20220: Bearing remover set

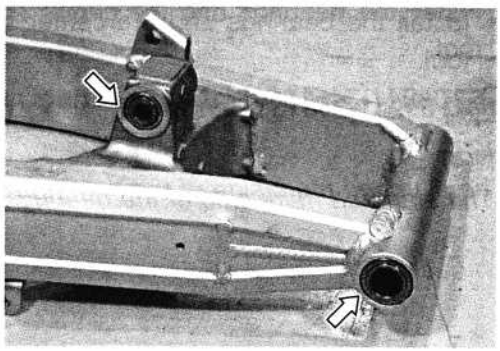

▲ CAUTION

The removed bearings must be replaced with new ones.

Chain buffer

Inspect the chain buffer for wear and damage.
If any defects are found, replace the chain buffer with a new one.

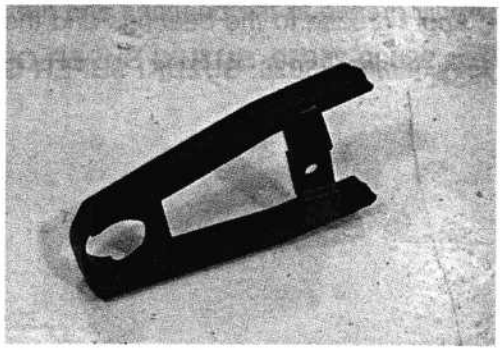

Swingarm pivot shaft

Using a dial gauge, check the pivot shaft runout and replace it if the runout exceeds the limit.

TOOL 09900-20606: Dial gauge (1/100 mm, 10 mm)
09900-20701: Magnetic stand
09900-21304: V-block (100 mm)

DATA Swingarm pivot shaft runout
Service Limit: 0.3 mm (0.01 in)

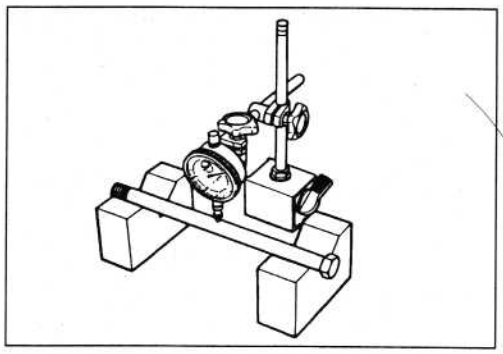

SWINGARM

Inspect the swingarm for damage and distortion.

REASSEMBLY AND REMOUNTING

Reassemble and remount the swingarm in the reverse order of removal and disassembly. Pay attention to the following points:

- Install the bearing using the special tool.

TOOL 09924-84521: Bearing installer

NOTE:
The stamped mark side of the bearing must face to the outside.

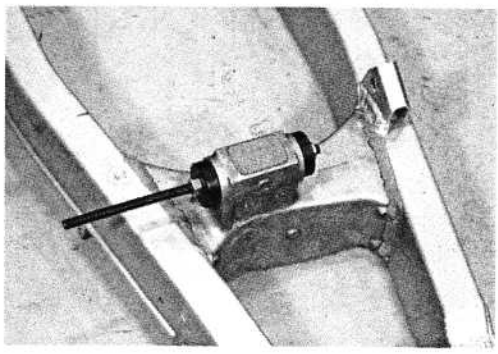

- Install the bearings and the center spacer using the special tool.

TOOL 09941-34513: Bearing/Steering race installer

NOTE:
The stamped mark side of the bearing must face to the outside.

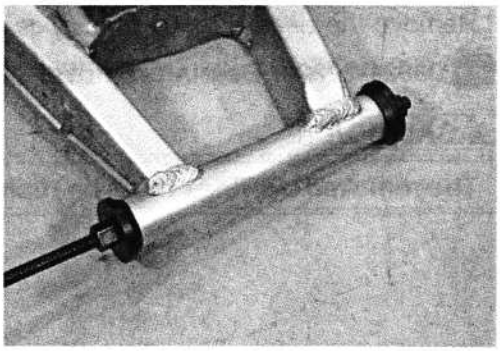

- Apply grease to the bearings and the spacers.

A 99000-25030: SUZUKI SUPER GREASE "A"

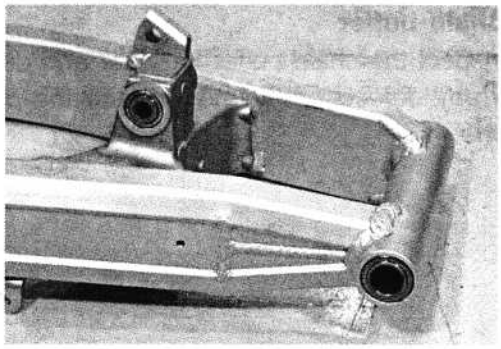

- Install the mud guard and the chain buffer.

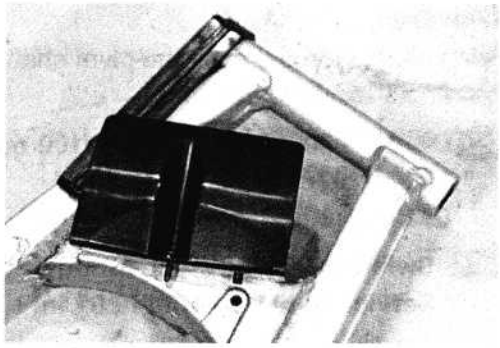

- Apply grease to the dust seal and the washer.

A 99000-25030: SUZUKI SUPER GREASE "A"

- Install the dust seal and the washer.

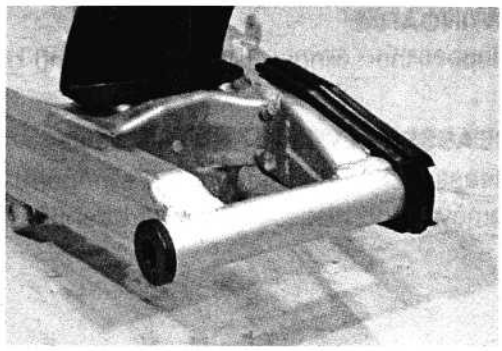

- Install the swingarm to the frame.

NOTE:
Apply grease to the swingarm pivot shaft before installing.

99000-25030: SUZUKI SUPER GREASE "A"

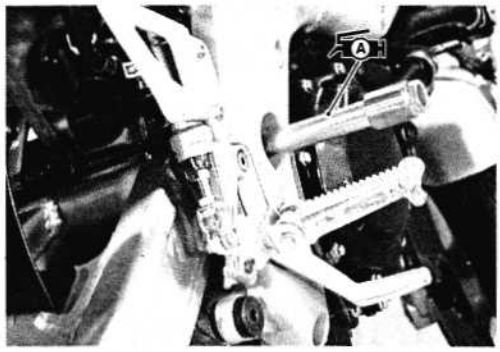

- Tighten each item in ascending order (① to ③) to the specified torque using the specified torque.

①Swingarm pivot shaft: 15 N·m (1.5 kgf·m, 11.0 lb-ft)
②Swingarm pivot shaft nut: 100 N·m (10.0 kgf·m, 72.5 lb-ft)
③Swingarm pivot shaft lock nut: 90 N·m (9.0 kgf·m, 65.0 lb-ft)

09940-14940: Swingarm pivot shaft lock nut socket wrench

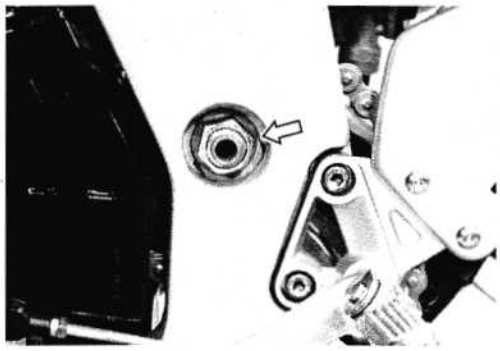

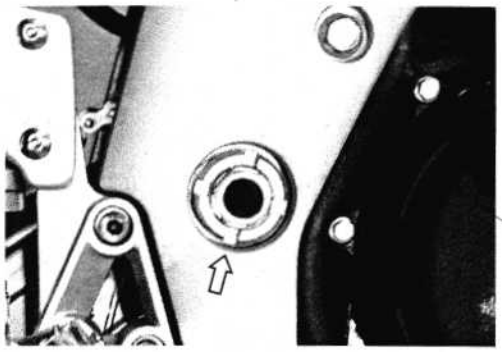

- Install the brake hose and torque link.

Torque link nut/bolt: 35 N·m (3.5 kgf·m, 25.5 lb-ft)

- Install the rear shock absorber and cushion lever. (☞ 6-40)
- Install the rear wheel. (☞ 6-34)
- Install the rear brake caliper. (☞ 6-57)

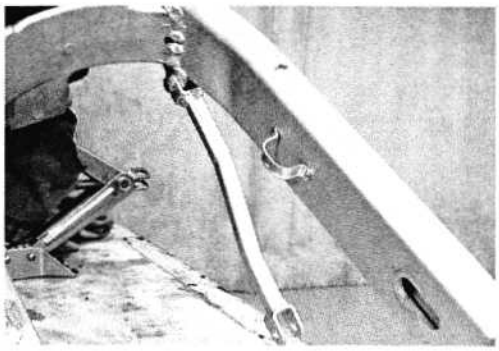

SUSPENSION SETTING

After installing the rear suspension, adjust the spring preload:

SPRING PRE-LOAD ADJUSTMENT

Position "7" provides the stiffest spring pre-load.
Position "1" provides the softest spring pre-load.
STD position : 2

FRONT BRAKE

CONSTRUCTION

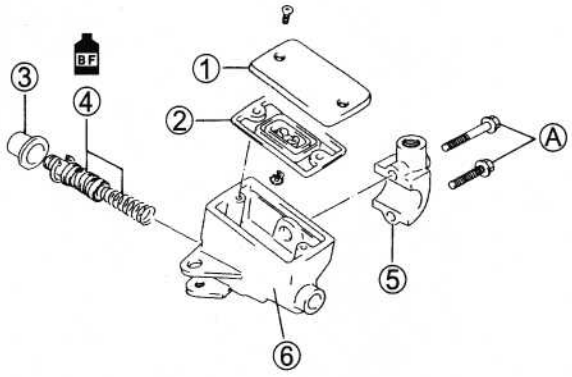

① Master cylinder reservoir cap
② Diaphragm
③ Dust boot
④ Piston/cup set
⑤ Master cylinder clamp
⑥ Master cylinder
⑦ Brake hose #1
⑧ Brake hose joint
⑨ Brake hose #2 (R)
⑩ Brake hose #2 (L)
⑪ Brake pads
⑫ Brake pad mounting pin
⑬ Clip
⑭ Spring
⑮ Dust seal
⑯ Piston seal
⑰ Brake caliper pistons
⑱ Brake caliper
⑲ Brake caliper holder

Ⓐ Master cylinder clamp bolt
Ⓑ Brake hose union bolt
Ⓒ Air bleeder valve
Ⓓ Brake caliper mounting bolt

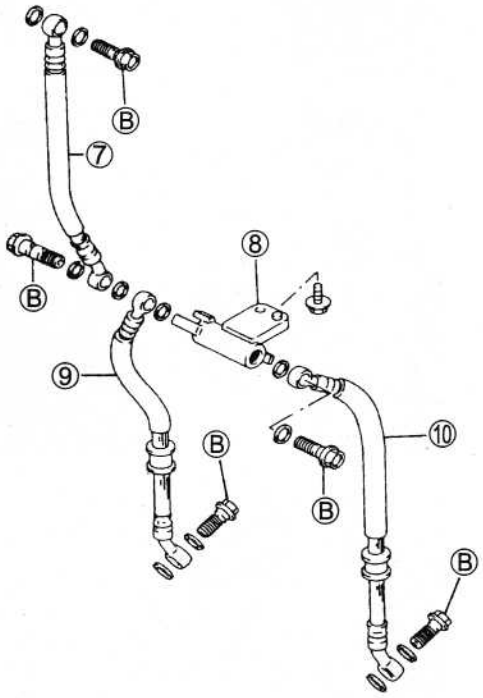

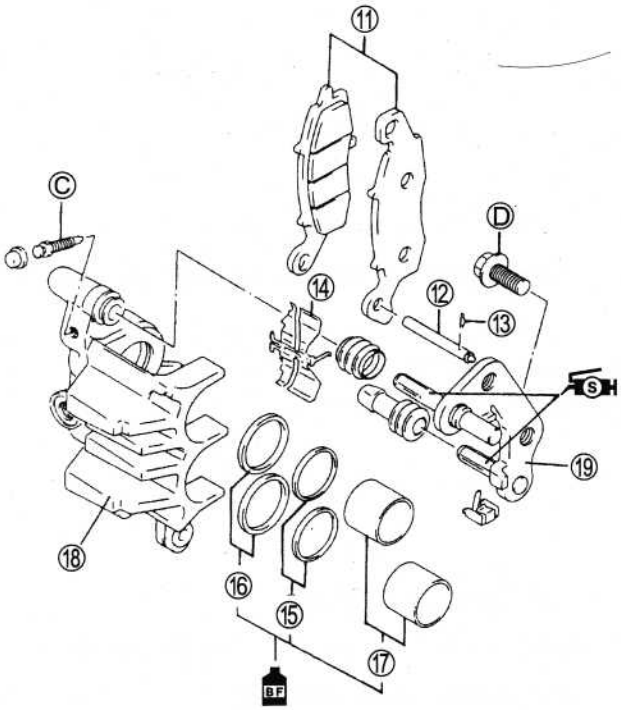

ITEM	N·m	kgf·m	lb-ft
Ⓐ	10	1.0	7.0
Ⓑ	23	2.3	16.5
Ⓒ	7.5	0.75	5.5
Ⓓ	39	3.9	28.0

⚠ WARNING

- **This brake system is filled with an ethylene glycol-based DOT 4 brake fluid. Do not use or mix different types of fluid, such as silicone-based or petroleum-based fluids.**
- **Do not use any brake fluid taken from old, used or unsealed containers. Never reuse brake fluid left over from the last servicing or which has been stored for long periods of time.**
- **When storing brake fluid, seal the container completely and keep it away from children.**
- **When replenishing brake fluid, take care not to get dust into the fluid.**
- **When washing brake components, use new brake fluid. Never use cleaning solvent.**
- **A contaminated brake disc or brake pad reduces braking performance. Discard contaminated pads and clean the disc with high quality brake cleaner or a neutral detergent.**

⚠ CAUTION

Handle brake fluid with care: the fluid reacts chemically with paint, plastics, rubber materials etc..

BRAKE FLUID REPLACEMENT

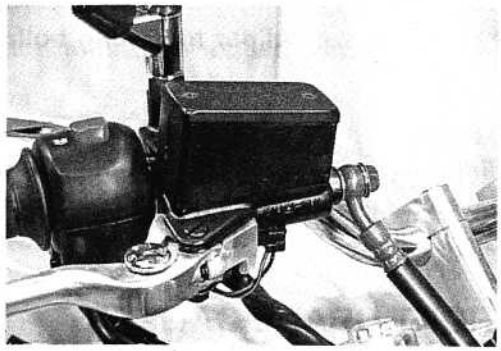

- Place the motorcycle on a level surface and keep the handlebars straight.
- Remove the brake fluid reservoir cap and diaphragm by removing the cap stopper.
- Suck up the old brake fluid as much as possible.
- Fill the reservoir with new brake fluid.

DATA Brake fluid type
Specification: DOT 4

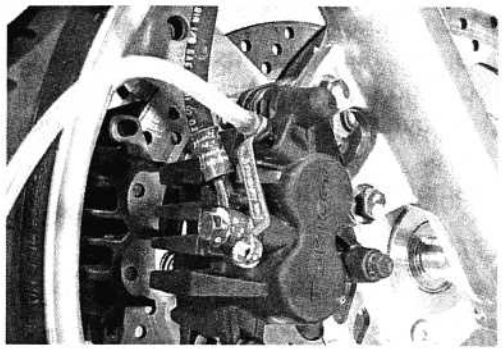

- Connect a cleaner hose to the caliper air bleeder valve and insert the other end of hose into a receptacle.
- Loosen the air bleeder valve and pump the brake lever until old brake fluid flows out of the bleeder system.
- Close the caliper air bleeder valve and disconnect a clear hose. Fill the reservoir with new brake fluid to the upper mark of the reservoir.

⚠ CAUTION

Bleed air from the brake system. (☞ 2-24)

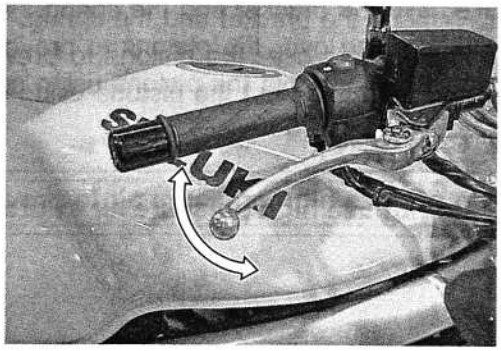

BRAKE PAD REPLACEMENT

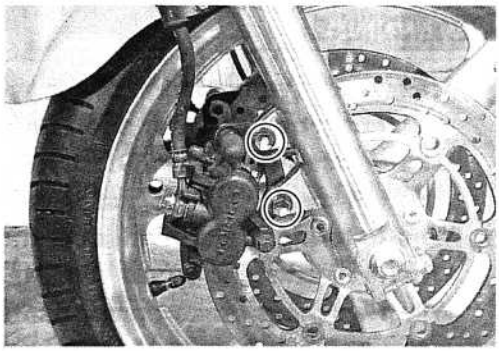

- Remove the brake caliper.

NOTE:
Before removing the brake pads, push the piston all the way into the caliper to facilitate later replacement.

- Remove the brake pads by removing the clip and pad mounting pin.

⚠ CAUTION

> * **Do not operate the brake lever while dismounting the pads.**
> * **Replace the brake pads as a set, otherwise braking performance will be adversely affected.**

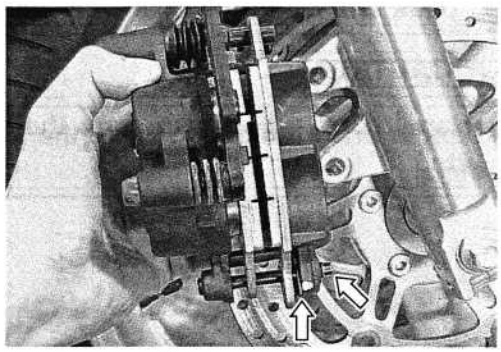

- Install the new brake pads.

NOTE:
Install the pad shim to the piston side brake pad.

- Tighten the brake caliper mounting bolts to the specified torque.

Front brake caliper mounting bolt: 39 N·m (3.9 kgf·m, 28.0 lb-ft)

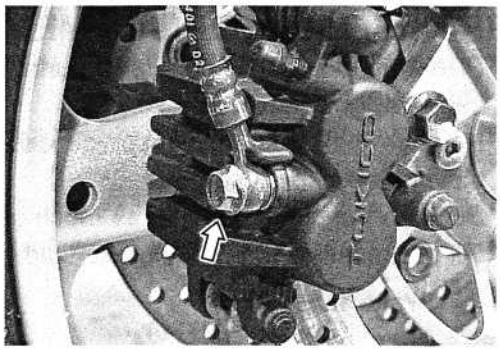

NOTE:
After replacing the brake pads, pump the brake lever few times to check for proper brake operation and then check the brake fluid level.

FRONT BRAKE CALIPER

REMOVAL AND DISASSEMBLY

- Drain brake fluid. (☞ 6-47)
- Remove the brake hose from the caliper by removing the union bolt and catch the brake fluid in a suitable receptacle.
- Remove the brake caliper by removing the caliper mounting bolts.
- Remove the brake pad.

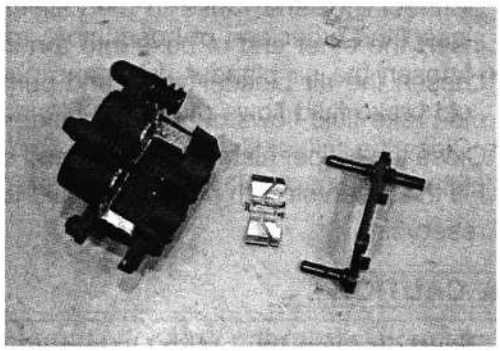

NOTE:
Place a rag underneath the union bolt on the brake caliper to catch any split brake fluid.

- Remove the bracket and the spring.
- Place a rag over the pistons to prevent it from popping out and then force out the pistons using compressed air.

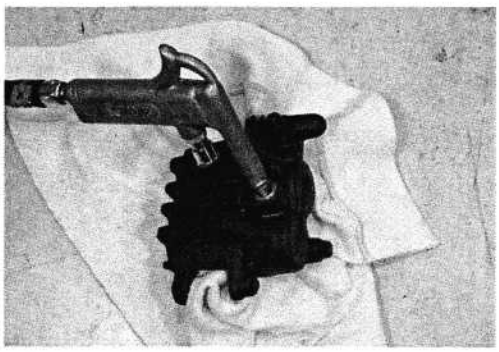

⚠ CAUTION

> **Do not use high pressure air to prevent piston damage.**

- Remove the dust seal and piston seal.

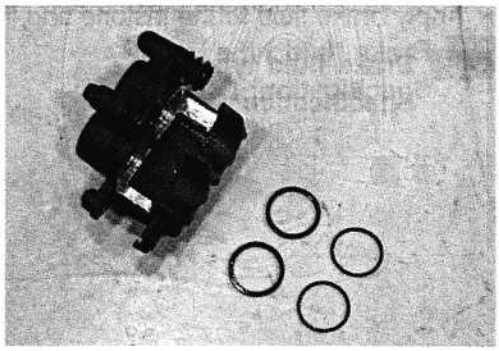

⚠ CAUTION

- **Be careful not to scratch the caliper cylinder bore.**
- **Do not reuse the dust seal and piston seal to prevent fluid leakage.**

BRAKE CALIPER INSPECTION

- Inspect the brake caliper cylinder wall for nicks, scratches or other damage.

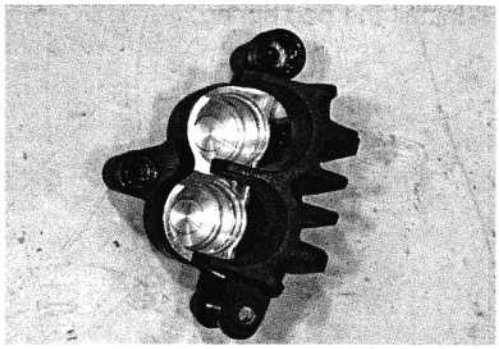

BRAKE CALIPER PISTON INSPECTION

- Inspect the brake caliper piston surface for any scratches or other damage.

REASSEMBLY

- Wash the caliper bores and pistons with specified brake fluid. Particularly wash the dust seal grooves and piston seal grooves.

DATA Brake fluid type
Specification: DOT 4

⚠ CAUTION

- **Wash the caliper components with fresh brake fluid before reassembly.**
- **Do not wipe the brake fluid off after washing the components.**
- **When washing the components, use the specified brake fluid. Never use different types of fluid or cleaning solvent such as gasoline, kerosene or the others.**
- **Replace the piston seals and dust seals with new ones when reassembly. Apply the brake fluid to both seals when installing them.**

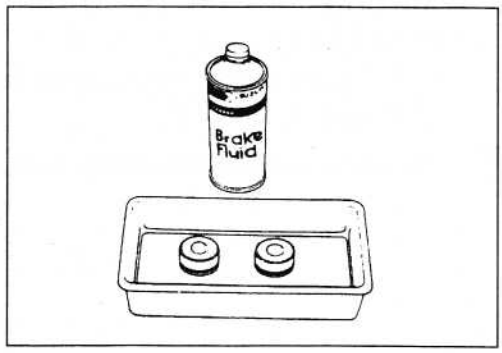

- Install the piston seal and dust seal into the caliper cylinder grooves as shown.

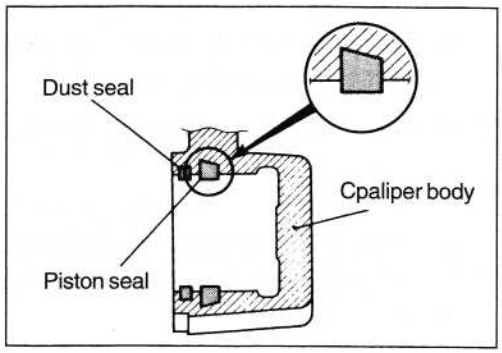

- Apply brake fluid to the pistons and install them to the caliper.

DATA Brake fluid type
Specification: DOT 4

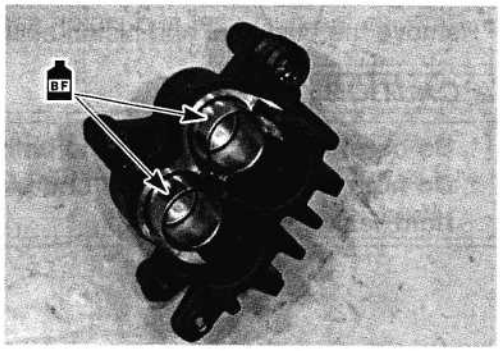

- Install the pad spring.

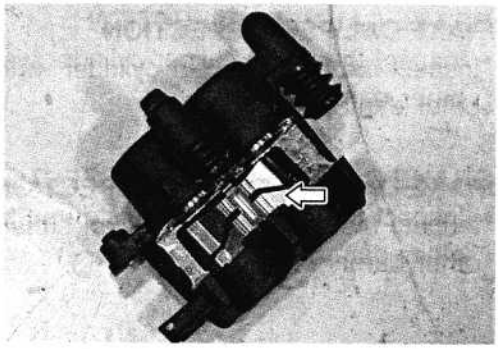

- Apply silicone grease to the brake caliper holder slide pins and install it to the caliper.

99000-25100: SUZUKI SILICONE GREASE

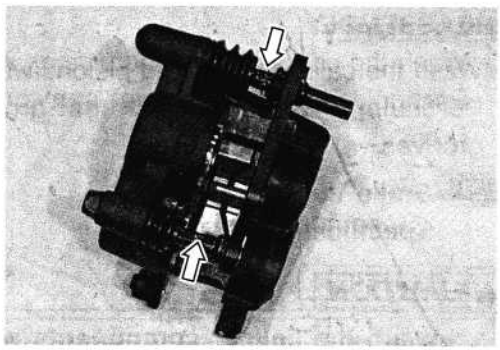

REMOUNTING

- Install the brake pads. (☞ 6-48)
- Install the brake calipers and tighten its mounting bolts to the specified torque.

Front brake caliper mounting bolt: 39 N·m (3.9 kgf·m, 28.0 lb-ft)

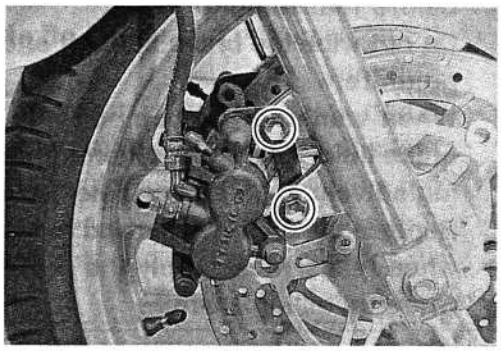

- Install the brake hose. (☞ 8-20)
- After touching the brake hose union to the stopper, tighten the union bolt to the specified torque.

Brake hose union bolt: 23 N·m (2.3 kgf·m, 16.5 lb-ft)

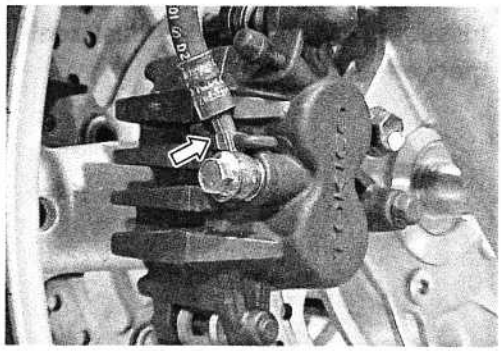

⚠ CAUTION

- **Use new seal washers to prevent fluid leakage.**
- **Bleed air from the system after reassembling the caliper. (☞ 2-24)**

FRONT MASTER CYLINDER

REMOVAL AND DISASSEMBLY

- Drain brake fluid. (☞ 6-47)
- Disconnect the brake light switch lead wire.

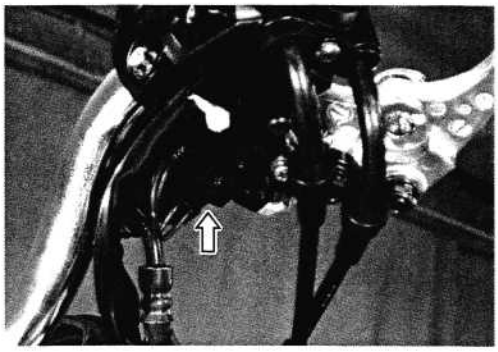

- Place a rag underneath the brake hose union bolt on the master cylinder to catch any split brake fluid. Remove the brake hose union bolt and disconnect the brake hose.

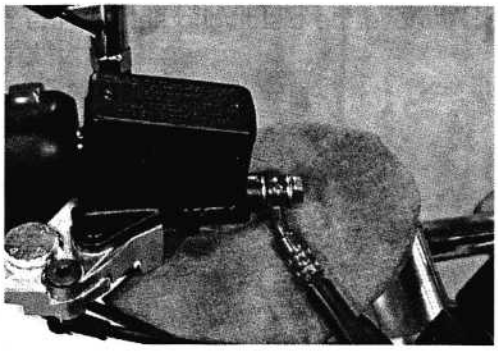

⚠ CAUTION

Immediately wipe off any brake fluid contacting any part of the motorcycle. The brake fluid reacts chemically with paint, plastics and rubber materials, etc., and will damage them severely.

- Remove the master cylinder.

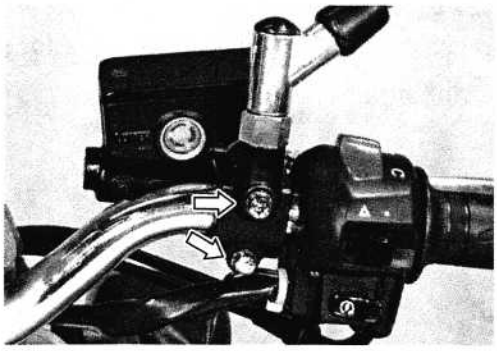

- Remove the brake lever and the brake light switch.

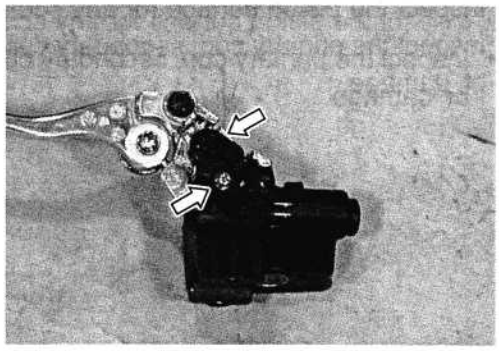

- Remove the dust boot.

- Remove the circlip.

TOOL 09900-06108: Snap ring pliers

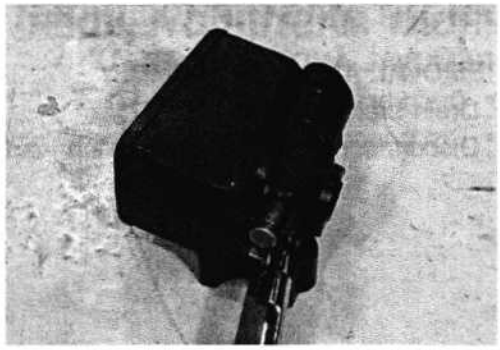

- Remove the piston/cup set and the return spring.

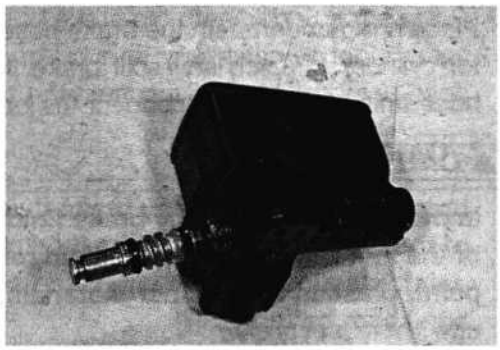

INSPECTION

- Inspect the master cylinder bore for any scratches or other damage.

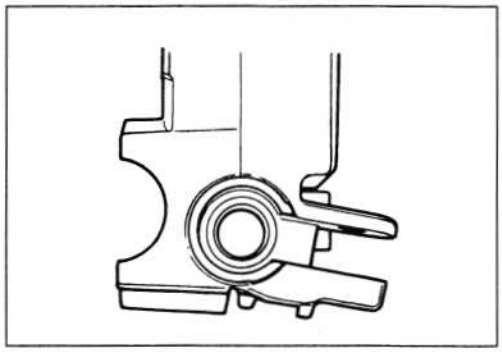

- Inspect the piston surface for any scratches or other damage.
- Inspect the primary cup, secondary cup and dust boot for wear or damage.

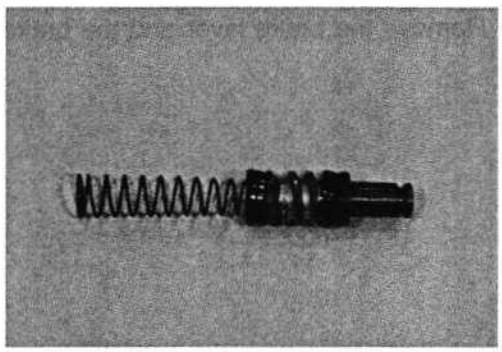

REASSEMBLY AND REMOUNTING

Reassemble the master cylinder in the reverse order of removal and disassembly. Pay attention to the following points:

⚠ CAUTION

- **Wash the master cylinder components with fresh brake fluid before reassembly. Never use cleaning solvent or gasoline to wash them.**
- **Do not wipe the components with a rag.**
- **Apply brake fluid to the cylinder bore and all the component to be inserted into the bore.**

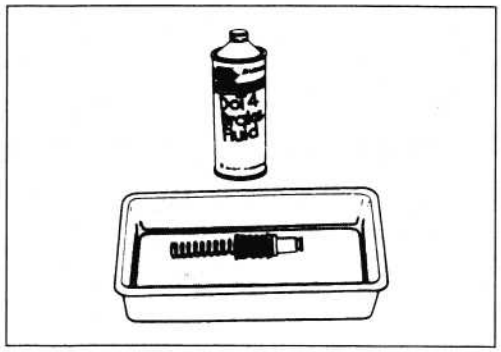

- Install the piston/cup set into the master cylinder.

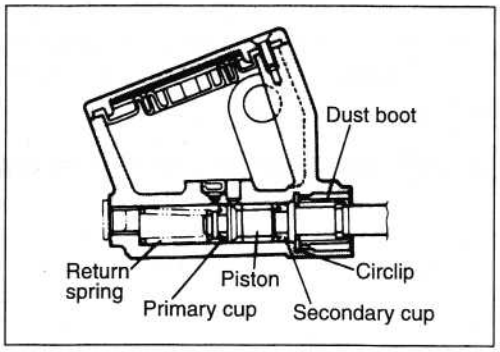

- Install the circlip.

TOOL 09900-06108: Snap ring pliers

⚠ CAUTION

The round edge side of the circlip must be against to inside.

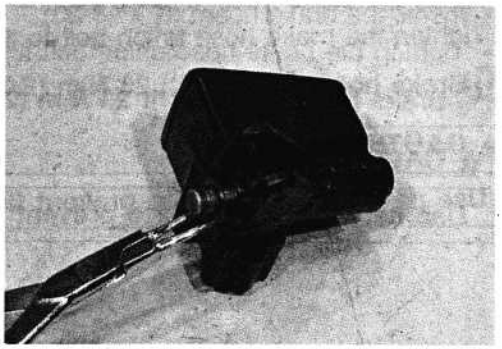

- Install the dust boot.

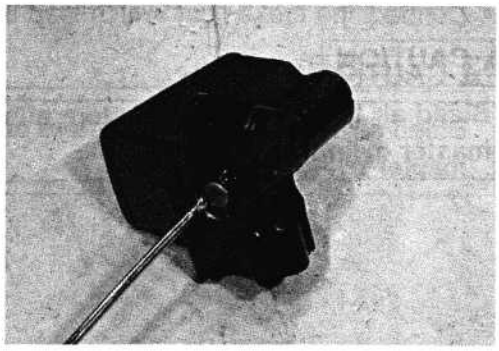

- Install the brake lever and the brake light switch.

NOTE:

* *Apply grease to the brake lever pivot bolt when installing.*

99000-25030: SUZUKI SUPER GREASE "A"

* *Align the projection on the brake light switch with the hole on the master cylinder.*

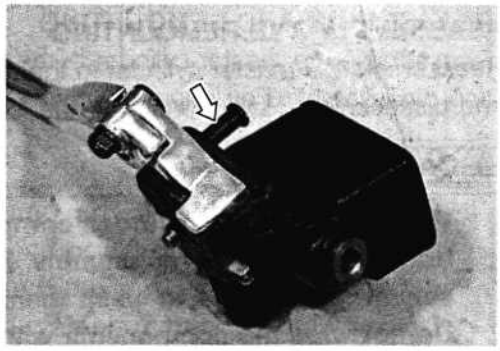

- When remounting the brake master cylinder onto the handlebar, align the master cylinder holder's mating surface Ⓐ with punched mark Ⓑ on the handlebar and tighten the upper clamp bolt first as shown.

Front brake master cylinder mounting bolt: 10 N·m (1.0 kgf·m, 7.0 lb-ft)

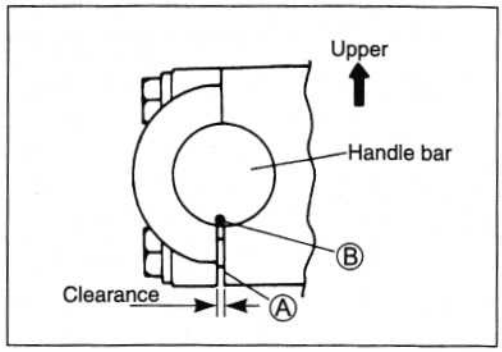

- Install the brake hose. (☞ 8-20)
- Tighten the brake hose union bolt to the specified torque.

Brake hose union bolt: 23 N·m (2.3 kgf·m, 16.5 lb-ft)

⚠ CAUTION

Use new seal washers to prevent fluid leakage.

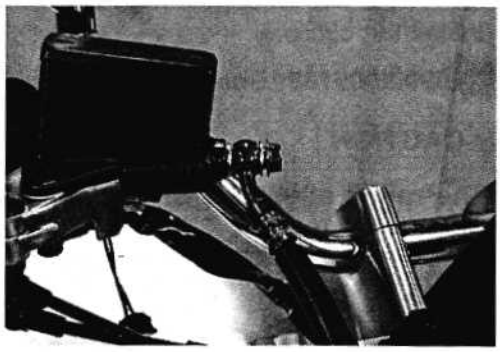

- Connect the brake light switch lead wire.

⚠ CAUTION

Bleed air from the brake system after reassembling the master cylinder. (☞ 2-24)

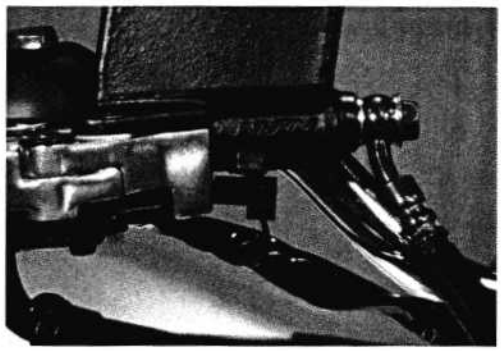

REAR BRAKE

CONSTRUCTION

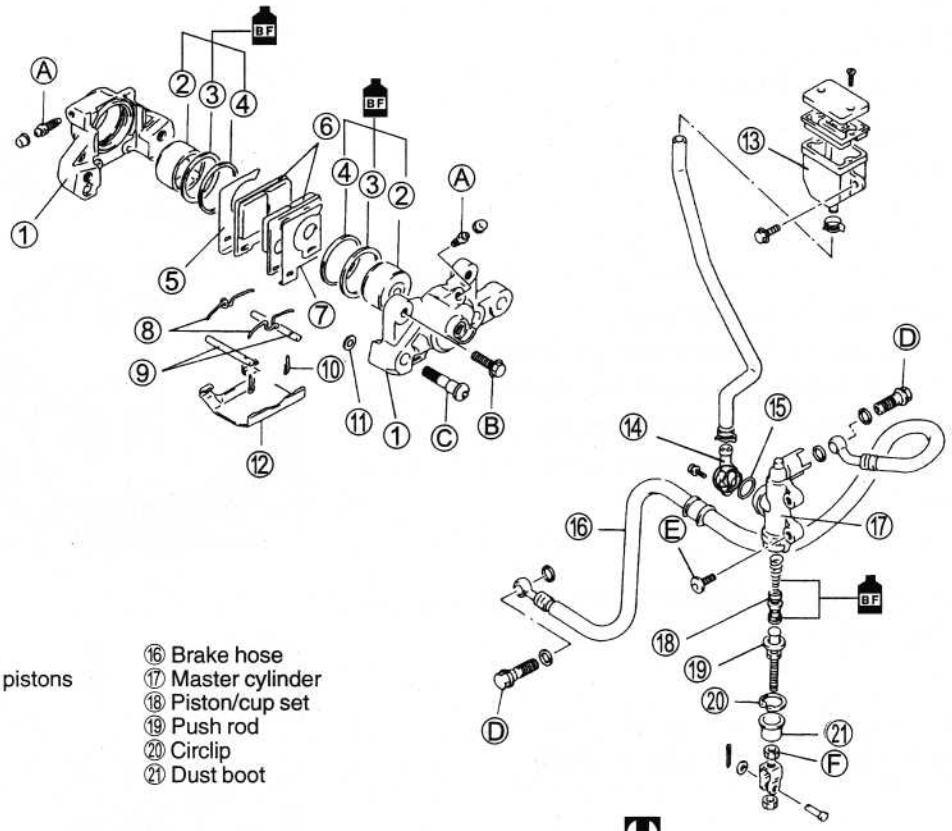

① Brake caliper
② Brake caliper pistons
③ Piston seals
④ Dust seals
⑤ Inner shim
⑥ Brake pads
⑦ Outer shim
⑧ Springs
⑨ Brake pad mounting pins
⑩ Clip
⑪ O-ring
⑫ Brake pad cover
⑬ Reservoir tank
⑭ Brake hose connector
⑮ O-ring
⑯ Brake hose
⑰ Master cylinder
⑱ Piston/cup set
⑲ Push rod
⑳ Circlip
㉑ Dust boot

Ⓐ Air bleeder valve
Ⓑ Brake caliper mounting bolt
Ⓒ Brake caliper housing bolt
Ⓓ Brake hose union bolt
Ⓔ Master cylinder mounting bolt
Ⓕ Master cylinder rod locknut

ITEM	N·m	kgf·m	lb-ft
Ⓐ	7.5	0.75	5.5
Ⓑ	26	2.6	19.0
Ⓒ	30	3.0	21.5
Ⓓ	23	2.3	16.5
Ⓔ	10	1.0	7.0
Ⓕ	18	1.8	13.0

⚠ WARNING

- **This brake system is filled with an ethylene glycol-based DOT 4 brake fluid. Do not use or mix different types of fluid, such as silicone-based or petroleum-based brake fluids.**
- **Do not use any brake fluid taken from old, used or unsealed containers. Never reuse brake fluid left over from the last servicing or which has been stored for long periods of time.**
- **When storing brake fluid, seal the container completely and keep it away from children.**
- **When replenishing brake fluid, take care not to get dust into the fluid.**
- **When washing brake components, use new brake fluid. Never use cleaning solvent.**
- **A contaminated brake disc or brake pad reduces braking performance. Discard contaminated pads and clean the disc with high quality brake cleaner or a neutral detergent.**

⚠ CAUTION

Handle brake fluid with care: the fluid reacts chemically with paint, plastics, rubber materials etc..

BRAKE FLUID REPLACEMENT

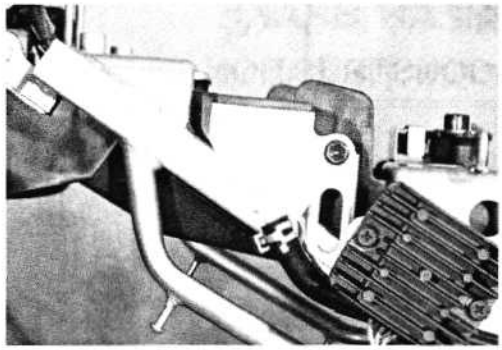

- Remove the front and rear seats. (☞ 6-3)
- Remove the seat tail cover. (☞ 6-4)
- Remove the master cylinder reservoir cap and diaphragm.
- Suck up the old brake fluid as much as possible.
- Fill the reservoir with new brake fluid.

DATA Brake fluid type
Specification: DOT 4

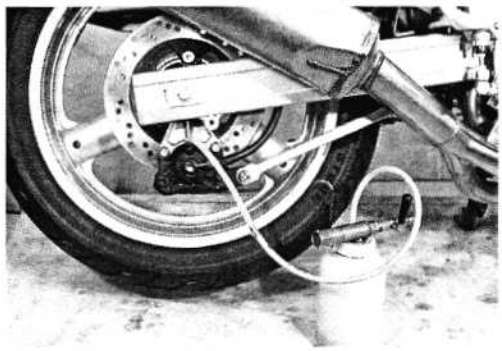

- Connect a clear hose to the air bleeder valve and insert the other end of the hose into a receptacle.
- Loosen the air bleeder valve and pump the brake pedal until the old brake fluid is completely out of the brake system.
- Close the aid bleeder valve and disconnect the clear hose. Fill the reservoir with new brake fluid to the upper end of the inspection window.

NOTE:
Bleed air from the back side air bleeder valve in the same manner of the front side one.

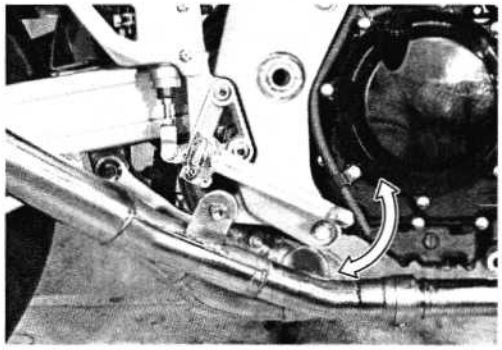

▲ CAUTION

Bleed air from the brake system. (☞ 2-24)

BRAKE PAD REPLACEMENT

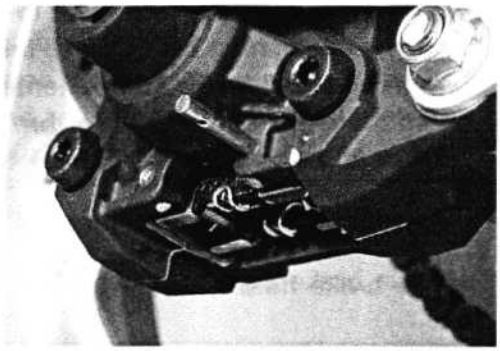

- Remove the brake pad cover.

NOTE:
Push the pistons all the way into the brake caliper to facilitate new brake pad installation.

- Remove the clip.
- Remove the brake pads along with the shims by removing the brake pad mounting pins and springs.

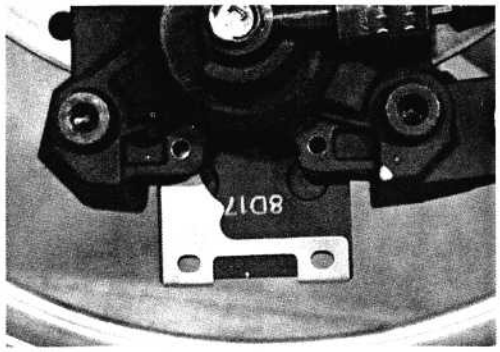

⚠ CAUTION

> *** Do not operate the brake pedal while dismounting the pads.**
> *** Replace the brake pads as a set, otherwise braking performance will be adversely affected.**

- Install the new brake pads and shims.

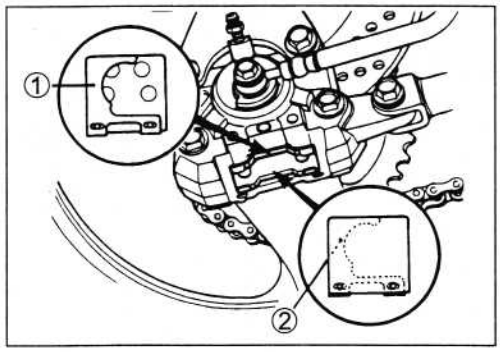

⚠ CAUTION

> **Be sure to install the shims ①, ② properly as shown.**

NOTE:
After replacing the brake pads, pump the brake pedal few times to operate the brake correctly and then check the brake fluid level.

REAR BRAKE CALIPER

REMOVAL AND DISASSEMBLY

- Remove the union bolt and catch the brake fluid in a suitable receptacle.

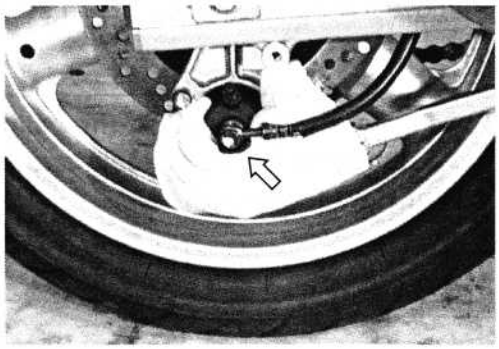

⚠ CAUTION

> **Never reuse the brake fluid left over from previous servicing and stored for long periods.**

⚠ WARNING

> **Brake fluid, if it leaks, will interfere with safe running and discolor painted surfaces. Check the brake hose and hose joints for cracks and fluid leakage.**

- Remove the brake caliper mounting bolts and torque link bolt.

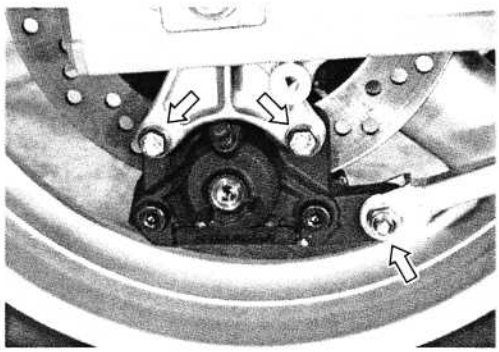

NOTE:
Slightly loosen the caliper housing bolts to facilitate later disassembly before removing the caliper mounting bolts.

- Remove the brake pads. (☞ 6-56)
- Remove the caliper housing bolts.
- Separate the caliper halves.

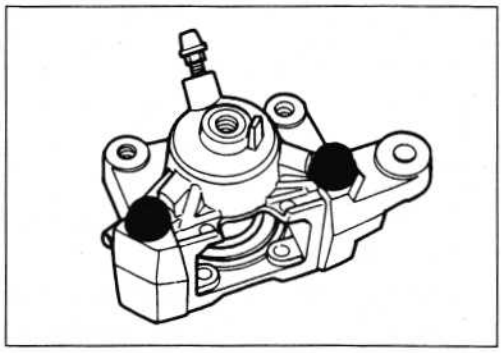

- Remove the O-ring ①.

▲ CAUTION

Replace the O-ring with a new one.

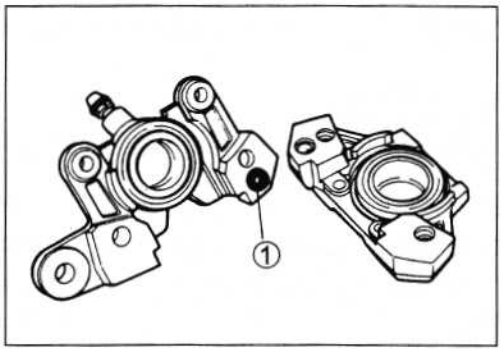

- Place a rag over the piston to prevent it from popping out and then force out the pistons using compressed air.

▲ CAUTION

Do not use high pressure air to prevent piston damage.

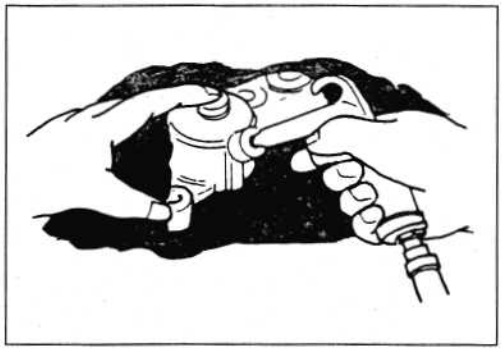

- Remove the dust seals and piston seals.

▲ CAUTION

*** Be careful not to scratch the caliper cylinder bore.**
*** Do not reuse the dust seals and piston seals to prevent fluid leakage.**

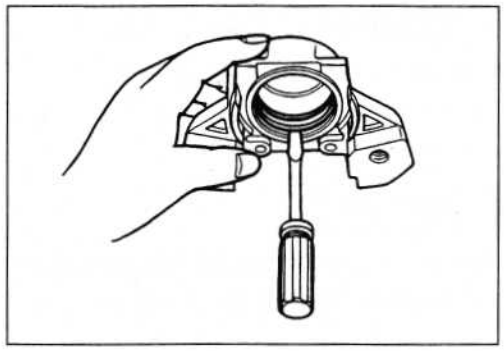

BRAKE CALIPER INSPECTION

- Inspect the brake caliper cylinder wall for nicks, scratches or other damage.

BRAKE CALIPER PISTON INSPECTION

- Inspect the brake caliper piston surface for any scratches or other damage.

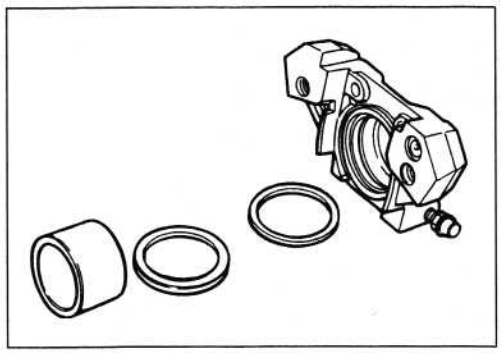

REASSEMBLY

- Wash the caliper bores and pistons with specified brake fluid. Particularly wash the dust seal grooves and piston seal grooves.

DATA Brake fluid type
Specification: DOT 4

⚠ CAUTION

- **Wash the caliper components with fresh brake fluid before reassembly.**
- **Do not wipe the brake fluid off after washing the components.**
- **When washing the components, use the specified brake fluid. Never use different types of fluid or cleaning solvent such as gasoline, kerosene or the others.**
- **Replace the piston seals and dust seals with new ones when reassembly. Apply the brake fluid to both seals when installing them.**

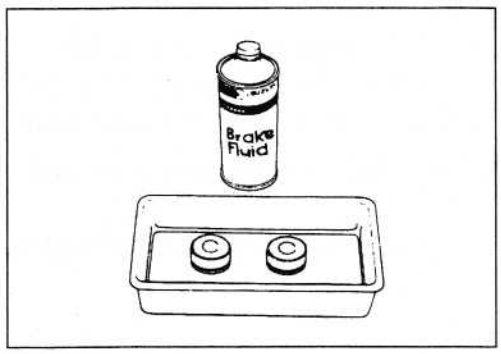

- Install the piston seal and dust seal into the caliper cylinder grooves as shown.

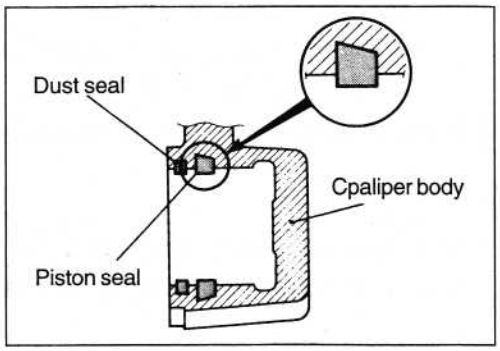

- Install the O-ring ①.
- Apply brake fluid to the pistons and install them to the caliper.

DATA Brake fluid type
Specification: DOT 4

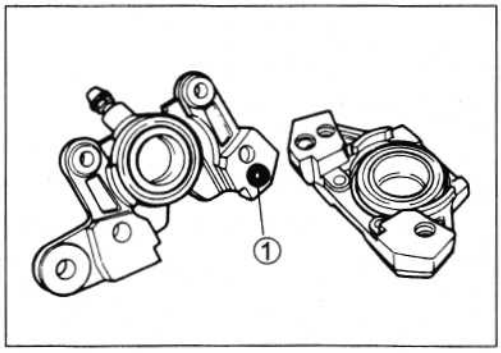

- Tighten the brake caliper housing bolt to the specified torque.

Brake caliper housing bolt: 30 N·m (3.0 kgf·m, 21.5 lb-ft)

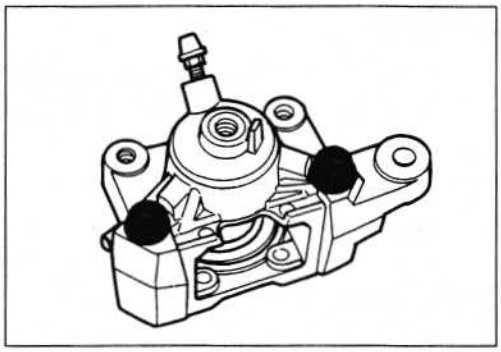

REMOUNTING

- Install the brake pads. (☞ 6-56)
- Install the brake calipers and tighten its mounting bolts and torque link nut to the specified torque.

Rear brake caliper mounting bolt: 26 N·m (2.6 kgf·m, 19.0 lb-ft)
Torque link nut: 35 N·m (3.5 kgf·m, 25.5 lb-ft)

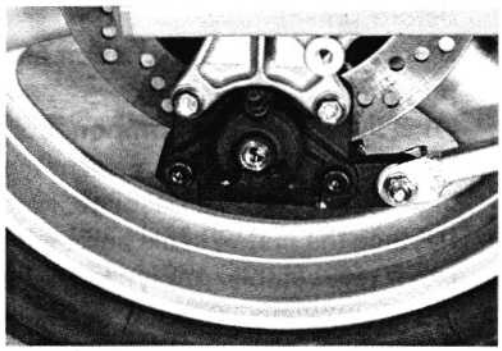

- Install the brake hose. (☞ 8-21)
- After touching the brake hose union to the stopper, tighten the union bolt to the specified torque.

Brake hose union bolt: 23 N·m (2.3 kgf·m, 16.5 lb-ft)

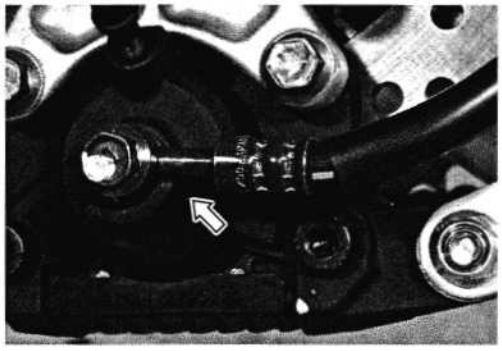

▲ CAUTION

- **Use new seal washers to prevent fluid leakage.**
- **Bleed air from the system after reassembling the caliper. (☞ 2-24)**

REAR MASTER CYLINDER

REMOVAL AND DISASSEMBLY

- Drain brake fluid. (☞ 6-56)
- Remove the brake hose connector and the O-ring.

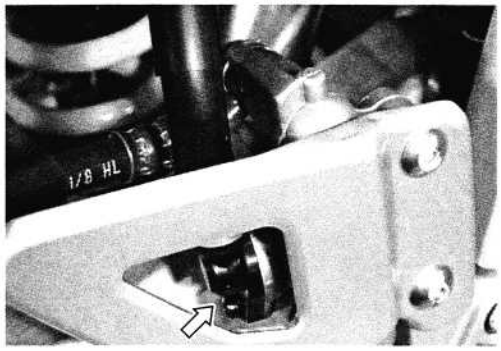

⚠ CAUTION

Replace the O-ring with a new one.

- Place a rag underneath the brake hose union bolt on the master cylinder to catch any spilt brake fluid. Remove the brake hose union bolt and disconnect the brake hose.

⚠ CAUTION

Immediately wipe off any brake fluid contacting any part of the motorcycle. The brake fluid reacts chemically with paint, plastics and rubber materials, etc., and will damage them severely.

- Remove the cotter pin, the washer and the pin.

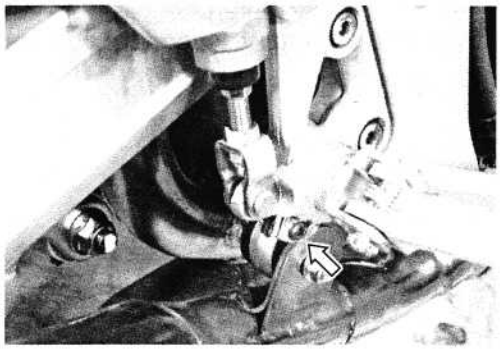

⚠ CAUTION

Replace the cotter pin with a new one.

- Remove the master cylinder and the footrest plate by removing the mounting bolts and push rod.

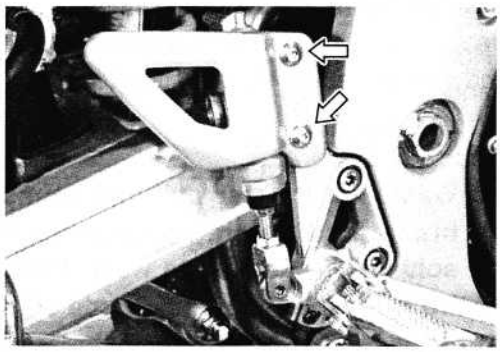

- Pull the dust boot out and remove the circlip.

TOOL 09900-06108: Snap ring pliers

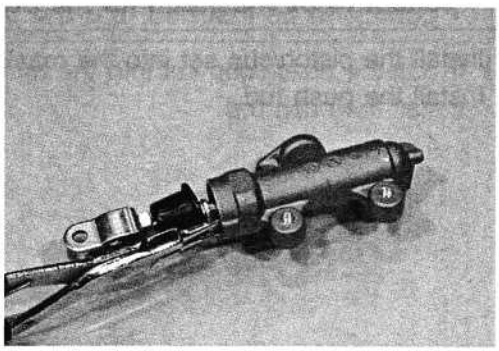

- Remove the push rod, piston cup set and the return spring.

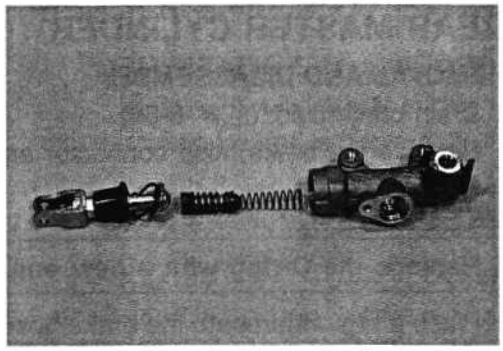

INSPECTION

- Inspect the master cylinder bore for any scratches or other damage.

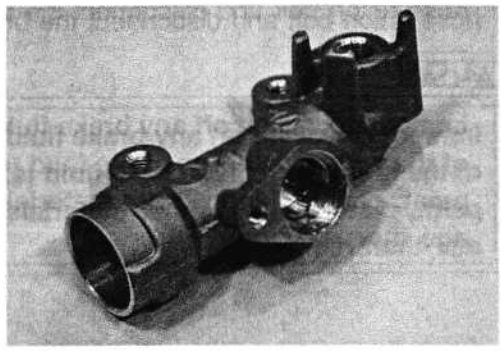

- Inspect the piston surface for any scratches of other damage.
- Inspect the primary/secondary cup and all of the rubber parts for damage.

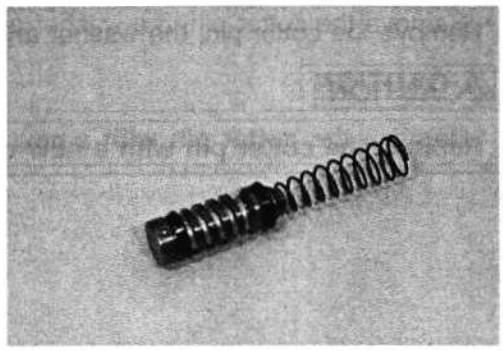

REASSEMBLY AND REMOUNTING

Reassemble the master cylinder in the reverse order of removal and disassembly. Pay attention to the following points:

▲ CAUTION

- **Wash the master cylinder components with fresh brake fluid before reassembly. Never use cleaning solvent or gasoline to wash them.**
- **Do not wipe the components with a rag.**
- **Apply brake fluid to the cylinder bore and all the component to be inserted into the bore.**

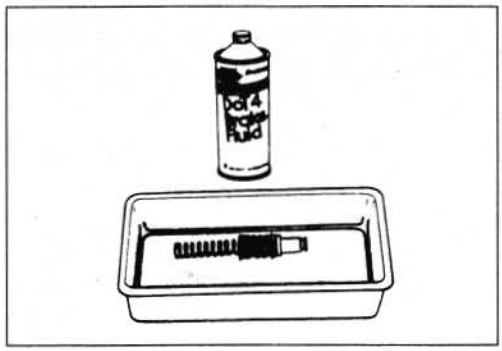

- Install the piston/cup set into the master cylinder.
- Install the push rod.

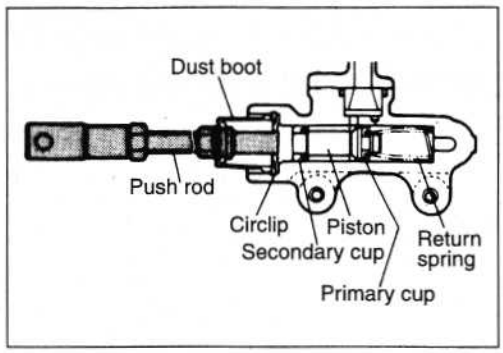

- Install the circlip.

TOOL 09900-06108: Snap ring pliers

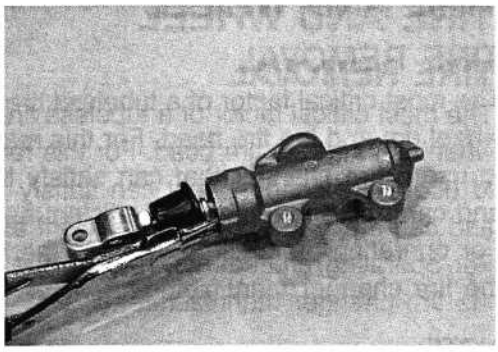

▲ CAUTION

The round edge side of the circlip must be against to inside.

- Install the dust boot.

- Tighten the rear brake master cylinder mounting bolts to the specified torque.

Rear brake master cylinder mounting bolt: 10 N·m (1.0 kgf·m, 7.0 lb-ft)

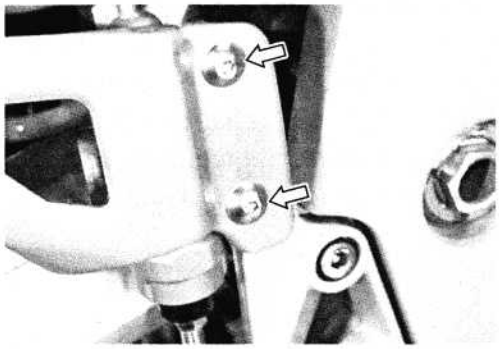

- Install the pin, the washer and the cotter pin.

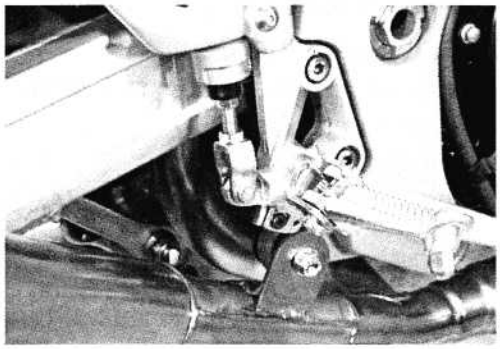

- After touching the brake hose union to the stopper, tighten the union bolt to the specified torque.

Brake hose union bolt: 23 N·m (2.3 kgf·m, 16.5 lb-ft)

▲ CAUTION

Use new seal washers to prevent fluid leakage.

- Install the brake hose connector.

▲ CAUTION

Use a new O-ring to prevent the fluid leakage.

▲ CAUTION

Bleed air from the brake system after reassembling the master cylinder. (☞ 2-24)

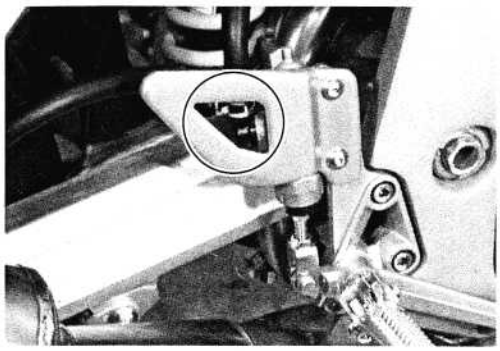

TIRE AND WHEEL

TIRE REMOVAL

The most critical factor of a tubeless tire is the seal between the wheel rim and the tire bead. For this reason, it is recommended to use a tire changer that can satisfy this sealing requirement and can make the operation efficient as well as functional.
For operating procedures, refer to the instructions supplied by the tire changer manufacturer.

NOTE:
When removing the tire in the case of repair or inspection, mark the tire with a chalk to indicate the tire position relative to the valve position.
Even though the tire is refitted to the original position after repairing puncture, the tire may have to be balanced again since such a repair can cause imbalance.

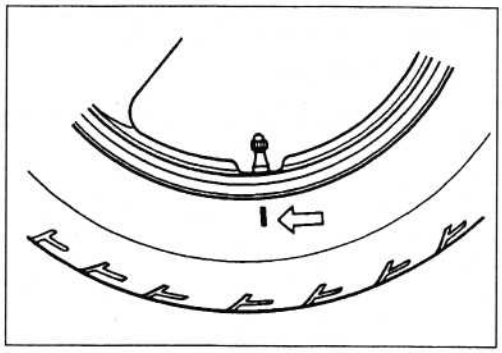

INSPECTION

WHEEL INSPECTION

Wipe the wheel clean and check for the following:
- Distortion and crack
- Nick or scratch on bead
- Wheel rim runout: Limit 2.0 mm (Axial and Radial)

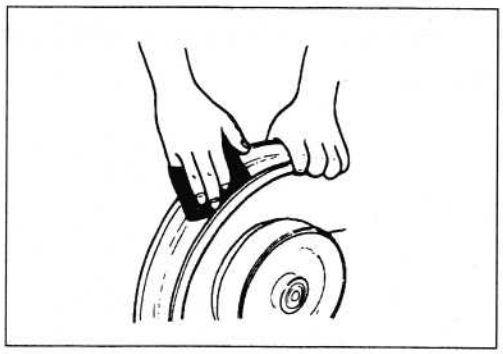

TIRE INSPECTION

Tire must be checked for the following points:
- Nick and rupture on side wall
- Thread remaining depth
- Separation of cord
- Abnormal, uneven wear on tread
- Surface damage on bead
- Localized tread wear due to skidding (Flat spot)
- Abnormal condition of inner liner

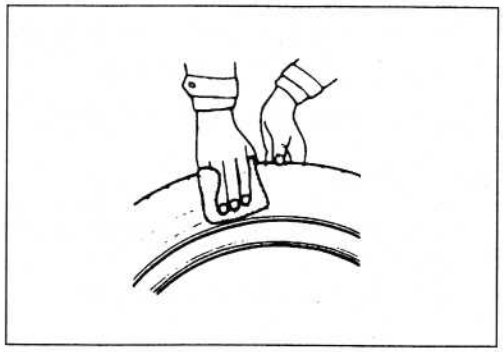

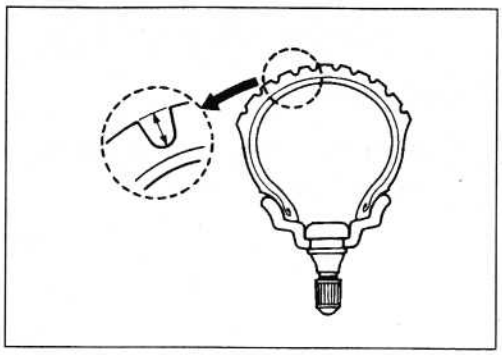

VALVE INSPECTION

Inspect the valve after the tire is removed from the rim.
Replace the valve with a new one if the seal rubber is peeling or has damage.

NOTE:
If the external appearance of the valve shows no abnormal condition, removing of the valve is not necessary.

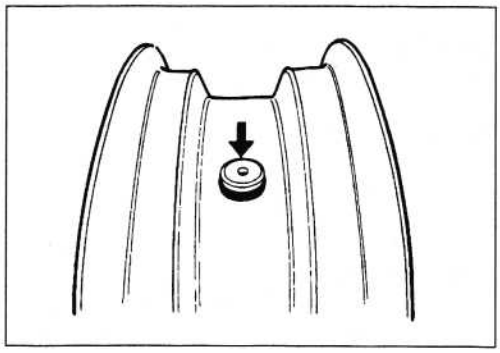

Inspect the valve core.
If the seal has abnormal deformation, replace the valve with a new one.

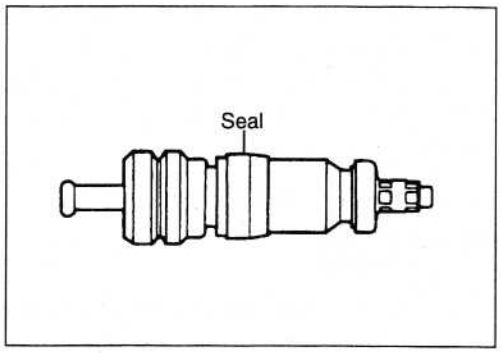

VALVE INSTALLATION

Any dust or rust around the valve hole must be cleaned off.
Then install the valve in the rim.

NOTE:
To properly install the valve into the valve hole, apply a special tire lubricant or neutral soapy liquid to the valve.

▲ CAUTION

Be careful not to damage the lip of valve.

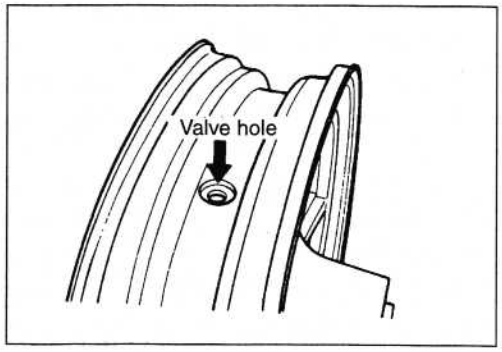

TIRE INSTALLATION

- Apply tire lubricant to the tire bead.
- When installing the tire onto the wheel, observe the following points.

▲ CAUTION

Do not reuse the valve which has been once removed.

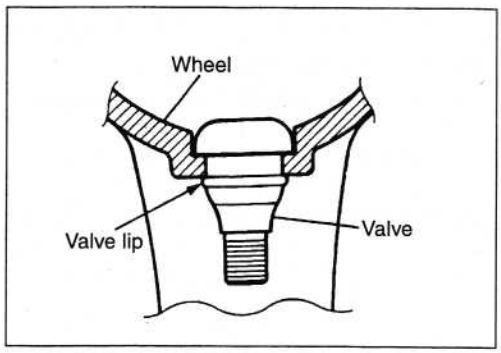

- The tire is designed to have specified rotational direction.

▲ CAUTION

Never use oil, grease or gasoline on the tire bead in place of tire lubricant.

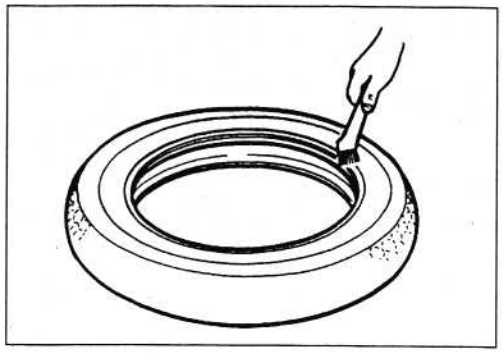

- When installing the tire, the arrow ① on the side wall should point the direction of wheel rotation.
- Align the chalk mark put on the tire at the time of removal with the valve position.

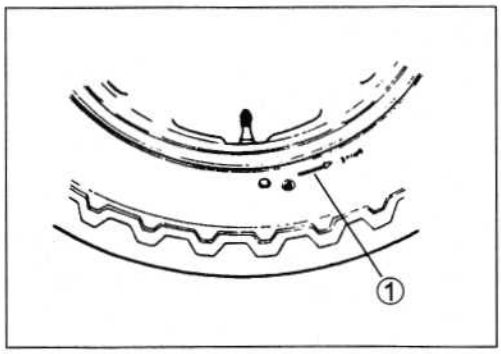

- For installation procedure of tire onto the wheel, follow the instructions given by the tire changer manufacturer.
- Bounce the tire several times while rotating. This makes the tire bead expand outward to contact the wheel, thereby facilitating air inflation.
- Pump up the tire with air.

⚠ WARNING

- **Do not inflate the tire to more than 400 kPa (4.0 kgf/cm²). If inflated beyond this limit, the tire can burst and possibly cause injury. Do not stand directly over the tire while inflating.**
- **In the case of preset pressure air inflator, pay special care for the set pressure adjustment.**

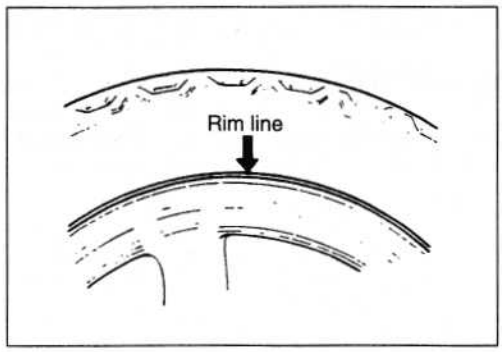

- In this condition, check the "rim line" cast on the tire side walls. The line must be equidistant from the wheel rim all around. If the distance between the rim line and wheel rim varies, this indicates that the bead is not properly seated. If this is the case, deflate the tire completely and unseat the bead for both sides. Coat the bead with lubricant and fit the tire again.
- When the bead has been fitted properly, inflate air and adjust the pressure to specification.
- As necessary, adjust the tire balance.

⚠ CAUTION

Do not run with a repaired tire at a high speed.

DATA Cold inflation tire pressure

	Front	Rear
Solo riding	225 kPa (2.25 kgf/cm², 33 psi)	250 kPa (2.50 kgf/m², 36 psi)
Dual riding	225 kPa (2.25 kgf/cm², 33 psi)	250 kPa (2.50 kgf/m², 36 psi)

ELECTRICAL SYSTEM

CONTENTS

CAUTIONS IN SERVICING 7- 2
LOCATION OF ELECTRICAL COMPOMENTS 7- 4
CHARGING SYSTEM 7- 7
DESCRIPTION 7- 7
TROUBLESHOOTING 7- 9
INSPECTION 7-10
STARTER SYSTEM AND SIDE-STAND/IGNITION INTERLOCK SYSTEM 7-12
STARTER SYSTEM DESCRIPTION 7-12
SIDE-STAND/IGNITION INTERLOCK SYSTEM DESCRIPTION 7-12
TROUBLESHOOTING 7-14
STARTER MOTOR REMOVAL AND DISASSEMBLY 7-15
STARTER MOTOR INSPECTION 7-15
STARTER MOTOR REASSEMBLY AND INSTALLATION 7-16
STARTER RELAY INSPECTION 7-19
SIDE-STAND/IGNITION INTERLOCK SYSTEM PART INSPECTION 7-20
IGNITION SYSTEM (DIGITAL IGNITOR) 7-23
DESCRIPTION 7-23
TROUBLESHOOTING 7-24
INSPECTION 7-25
SPEEDOMETER 7-29
REMOVAL 7-29
CONSTRUCTION 7-31
INSPECTION 7-32
RELAYS 7-36
STARTER RELAY 7-36
TURN SIGNAL/SIDE-STAND RELAY 7-36
LAMPS 7-37
HEADLIGHT 7-37
BRAKE LIGHT/TAILLIGHT 7-39
TURN SIGNAL LIGHTS 7-39
SWITCHES 7-40
IGNITION SWITCH REMOVAL 7-41
BATTERY 7-42
SPECIFICATIONS 7-42
INITIAL CHARGING 7-42
SERVICING 7-43
RECHARGING OPERATION 7-44

CAUTIONS IN SERVICING

CONNECTOR

- When disconnecting a connector, be sure to hold the terminals; do not pull the lead wires.
- When connecting a connector, push it in so it is firmly attached.
- Inspect the connector for corrosion, contamination and any breakage in the cover.

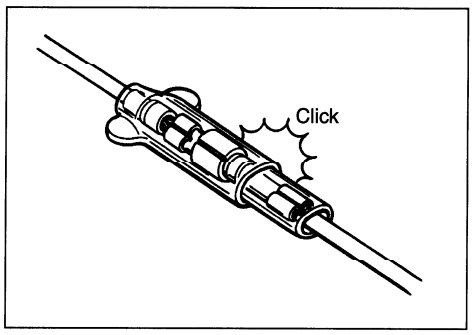

COUPLER

- With a lock-type coupler, be sure to release the lock before disconnecting it. When connecting a coupler, push it in until the lock clicks shut.
- When disconnecting a coupler, be sure to hold the coupler; do not pull the lead wires.
- Inspect each terminal on the coupler for looseness or bends.
- Inspect each terminal for corrosion and contamination.

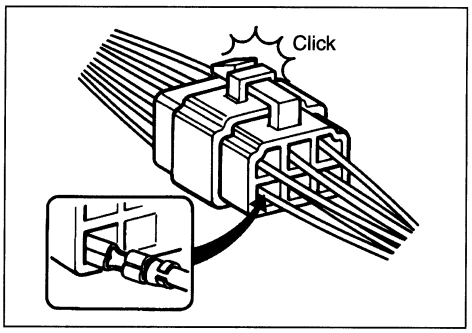

CLAMPS

- Refer to "WIRE, CABLE AND HOSE ROUTING" (☞ 8-13 to -16) for proper clamping procedures.
- Bend the clamp properly as shown in the illustration.
- When clamping the wire harness, do not allow it to hang down.
- Do not use wire or any other substitute for the band-type clamp.

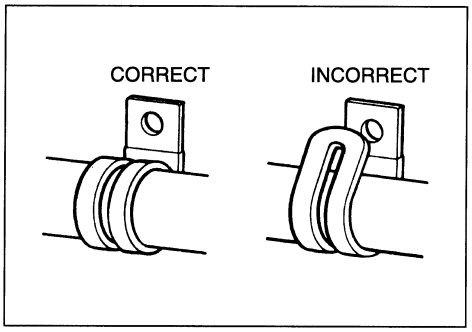

FUSE

- When a fuse blows, always investigate the cause, correct the problem and then replace the fuse.
- Do not use a fuse of a different capacity.
- Do not use any substitutes for the fuse (e.g., wire).

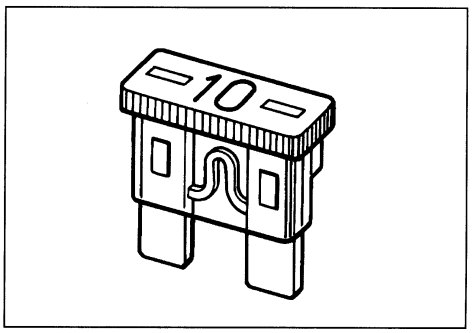

SEMI-CONDUCTOR EQUIPPED PARTS

- Do not drop any part that contains a semi-conductor (e.g., ignitor, regulator/rectifier).
- When inspecting the part, follow the inspection instructions carefully. Neglecting proper procedures may cause this part to be damaged.

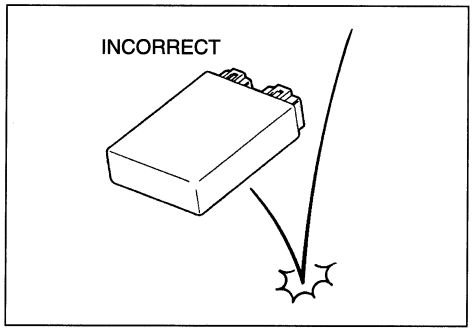

BATTERY

- The MF battery used in this motorcycle does not require maintenance (e.g., electrolyte level inspection, distilled water replenishing).
- During normal charging, no hydrogen gas is produced. However, if the battery is overcharged, hydrogen gas may be produced. Therefore, be sure that there are no fire or spark sources nearby (e.g., short-circuit) when charging the battery.
- Be sure to recharge the battery in a well-ventilated and open area.
- Note that the charging system for the MF battery is different from that of a conventional battery. Do not replace the MF battery with a conventional battery.

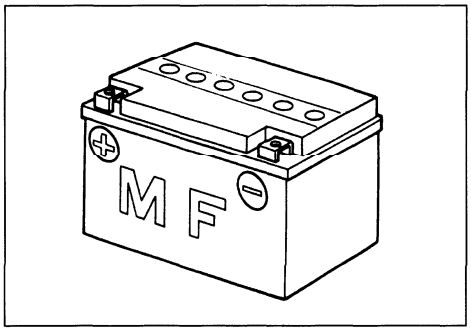

CONNECTING BATTERY

- When disconnecting terminals from the battery for disassembly or servicing, be sure to disconnect the negative (⊖) terminal first.
- When connecting terminals to the battery, be sure to connect the positive (⊕) terminal first.
- If the terminal is found corroded, remove the battery, pour warm water over it and clean with a wire brush.
- Upon completion of connection, apply grease lightly.
- Put a cover over the positive (⊕) terminal.

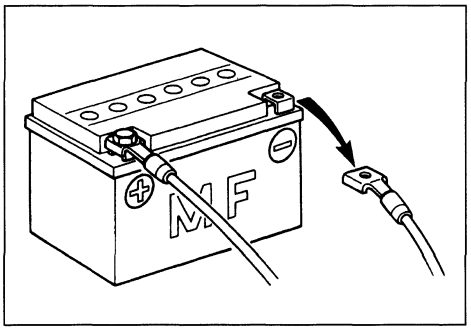

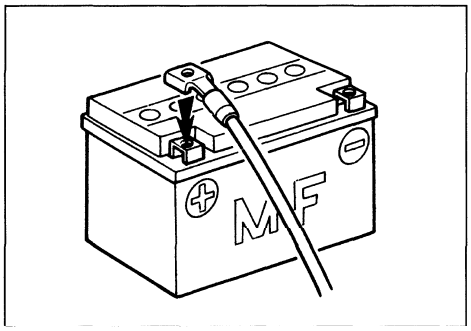

WIRING PROCEDURE

- Route the wire harness properly according to "WIRE HARNESS ROUTING" (☞ 8-13 to -15).

USING MULTI CIRCUIT TESTER

- Be sure to use positive (⊕) and negative (⊖) probes of the tester properly. Their false use may cause damage in the tester.
- If the current values are not known, start measuring in the higher range.
- Taking a measurement where voltage is applied in the resistance range may cause damage in the tester. When measuring resistance, check to make sure that no voltage is applied there.
- After using the tester, turn the switch to the OFF position.

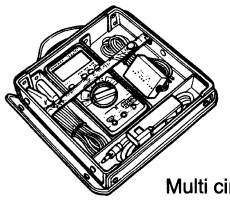
Multi circuit tester

⚠ CAUTION

Before using the multi tester, read the instruction manual.

LOCATION OF ELECTRICAL COMPONENTS

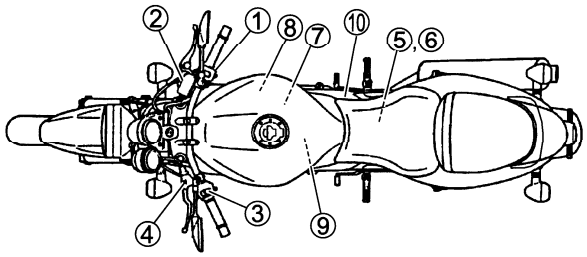

① Handlebar switch (R)
② Front brake switch
③ Handlebar switch (L)
④ Clutch switch
⑤ Fuse box
⑥ Turn signal/side-stand relay
⑦ Fuel level indicator switch
⑧ Throttle position sensor
⑨ Ignition coil (rear)
⑩ Starter relay

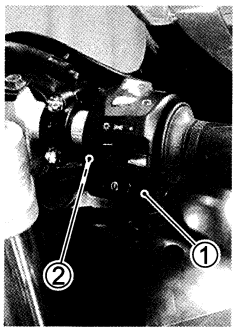

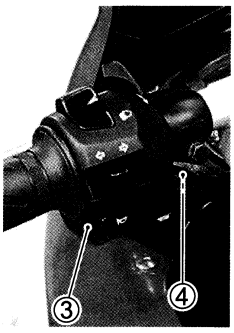

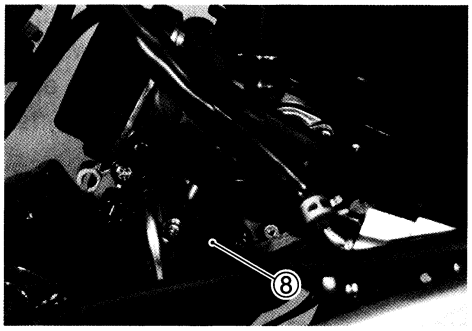

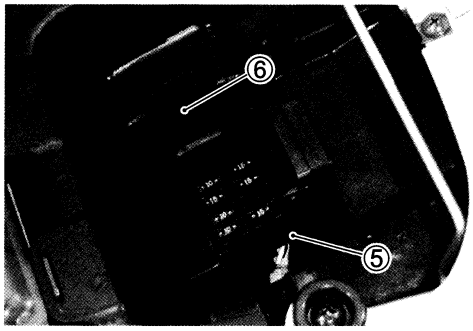

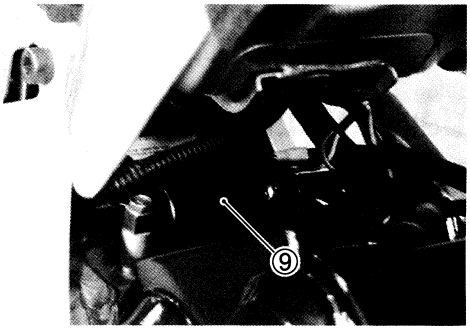

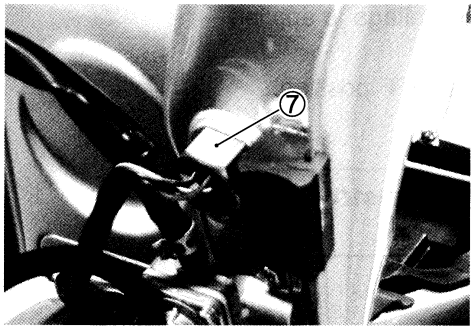

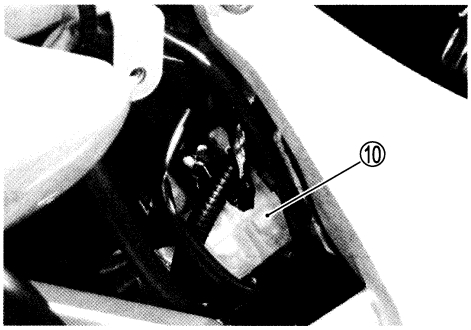

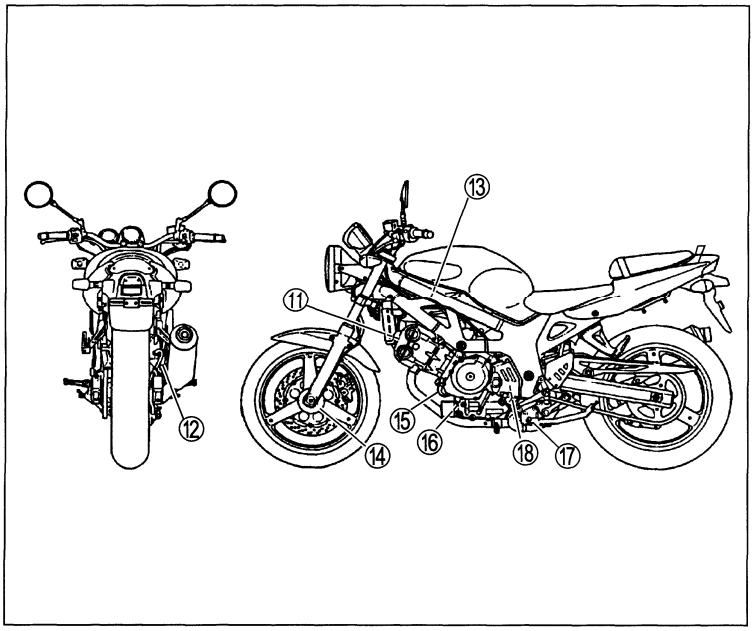

⑪ Fan motor switch
⑫ Stop lamp switch
⑬ Ignition coil (Front side)
⑭ Speed sensor
⑮ Starter motor
⑯ Oil presser switch
⑰ Side stand switch
⑱ Neutral switch

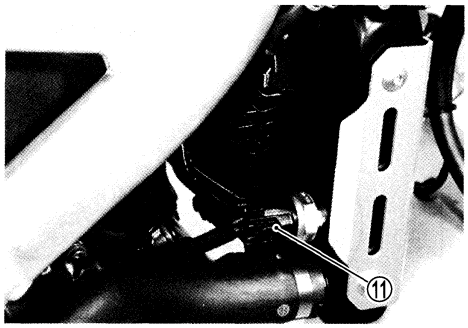

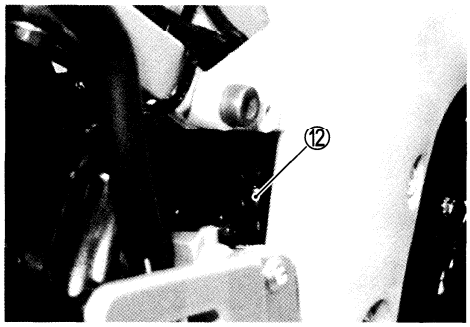

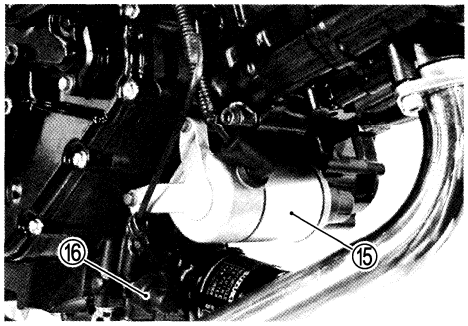

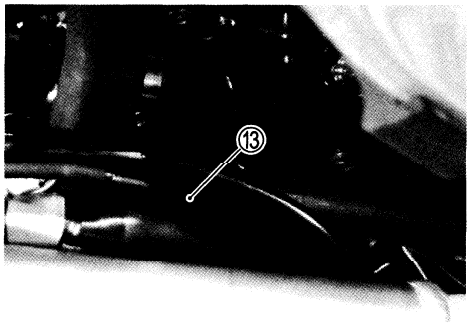

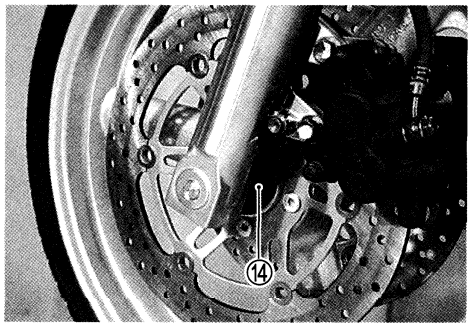

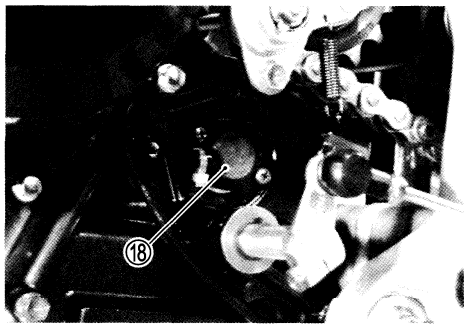

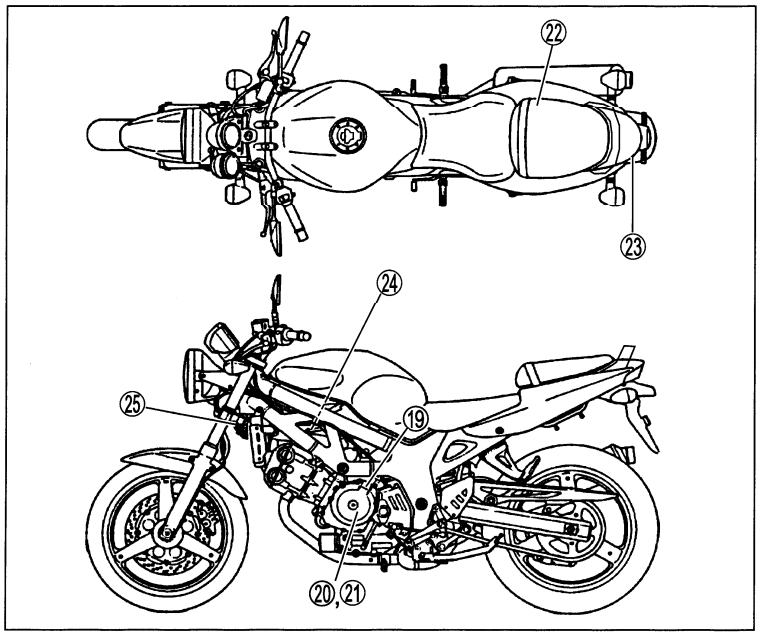

⑲ Signal generator
⑳ Generator stator
㉑ Generator rotor
㉒ Regulator/Rectifier
㉓ Ignitor
㉔ Water temperature switch
㉕ Horn

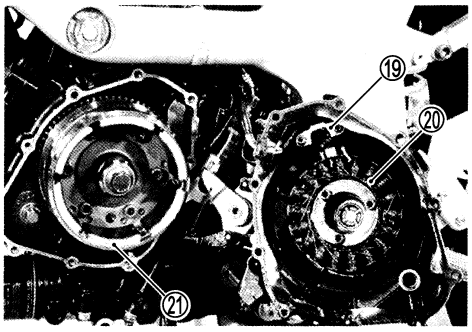

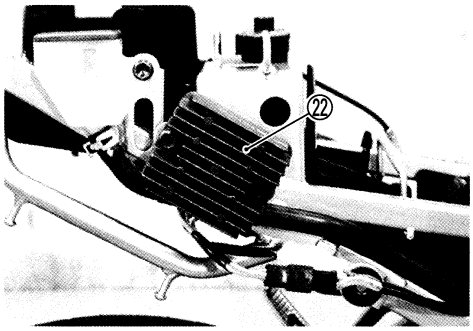

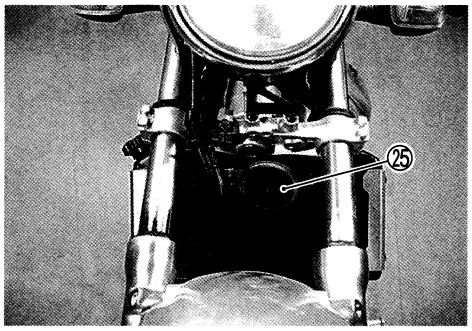

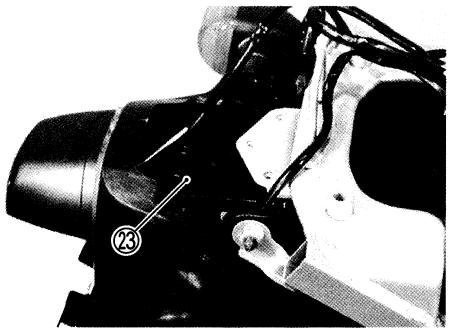

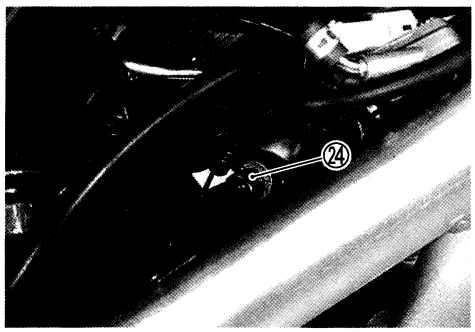

CHARGING SYSTEM

DESCRIPTION

The circuit of the charging system is indicated in the figure, which is composed of a generator, regulator/rectifier unit and battery.

The AC current generated from the generator is rectified by the rectifier and is turned into DC current, then it charges the battery.

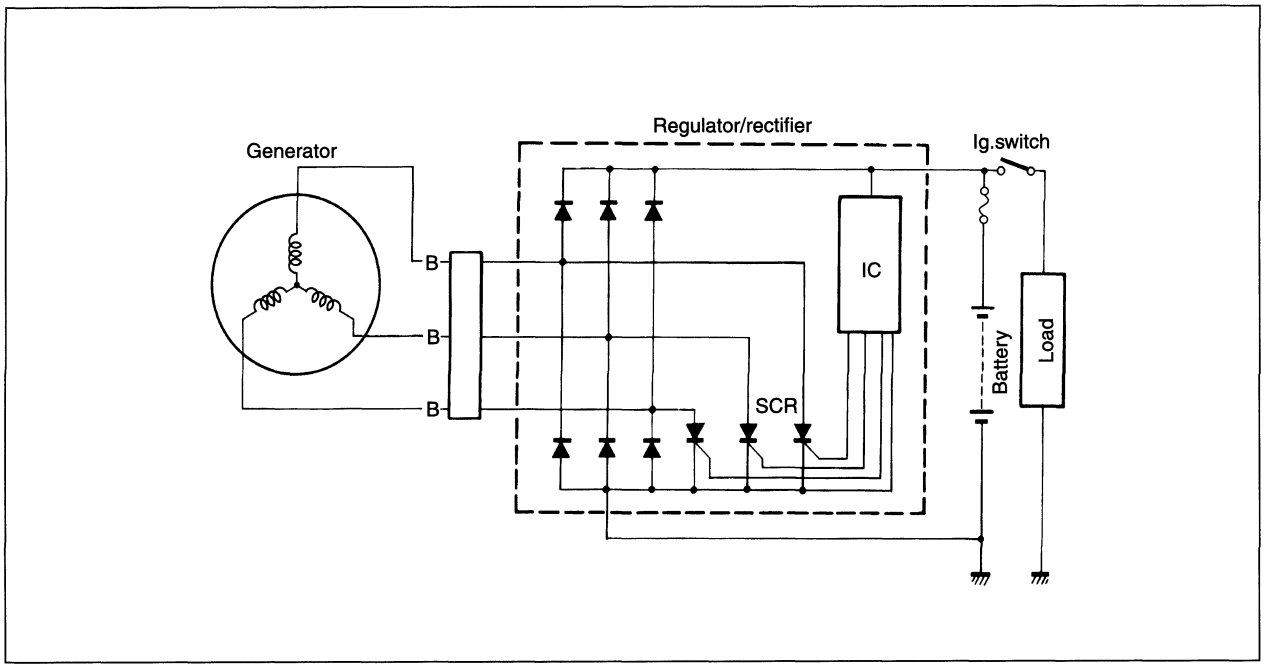

FUNCTION OF REGULATOR

While the engine r/min is low and the generated voltage of the generator is lower than the adjusted voltage of regulator, the regulator does not function. However, the generated current charges the battery directly at this time.

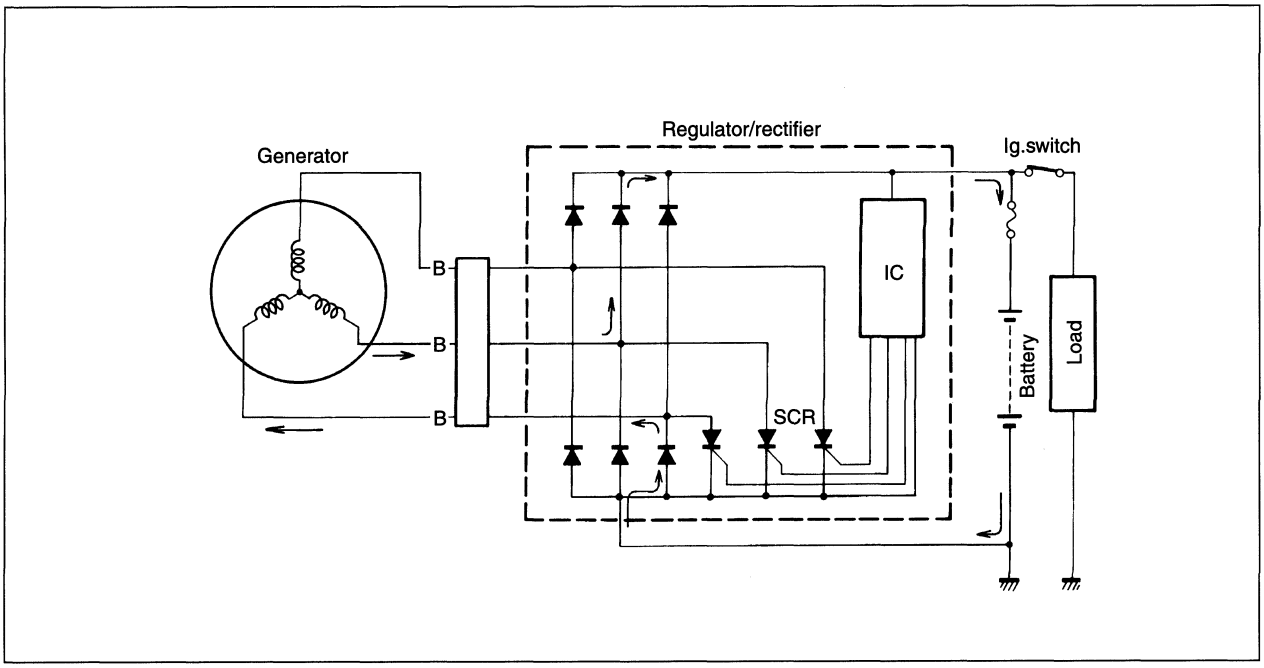

When the engine r/min becomes higher, the generated voltage of the generator also becomes higher and the voltage between the battery terminals becomes high accordingly. When it reaches the adjusted voltage of the I.C., (Integrated Circuit) and it is turned "ON", a signal will be sent to the SCR (Thyristor) gate probe and the SCR will be turned "ON".
Then, the SCR becomes conductive in the direction from point Ⓐ to point Ⓑ. At this time, the current generated from the generator gets through the SCR without charging the battery and returns to generator again. At the end of this state, since the AC current generated from generator flows to point Ⓑ, the reverse current tends to flow to SCR. Then, the circuit of SCR turns to the OFF mode and begins to charge the battery again. Thus these repetitions maintain charging voltage and current to the battery constant and protect it from overcharging.

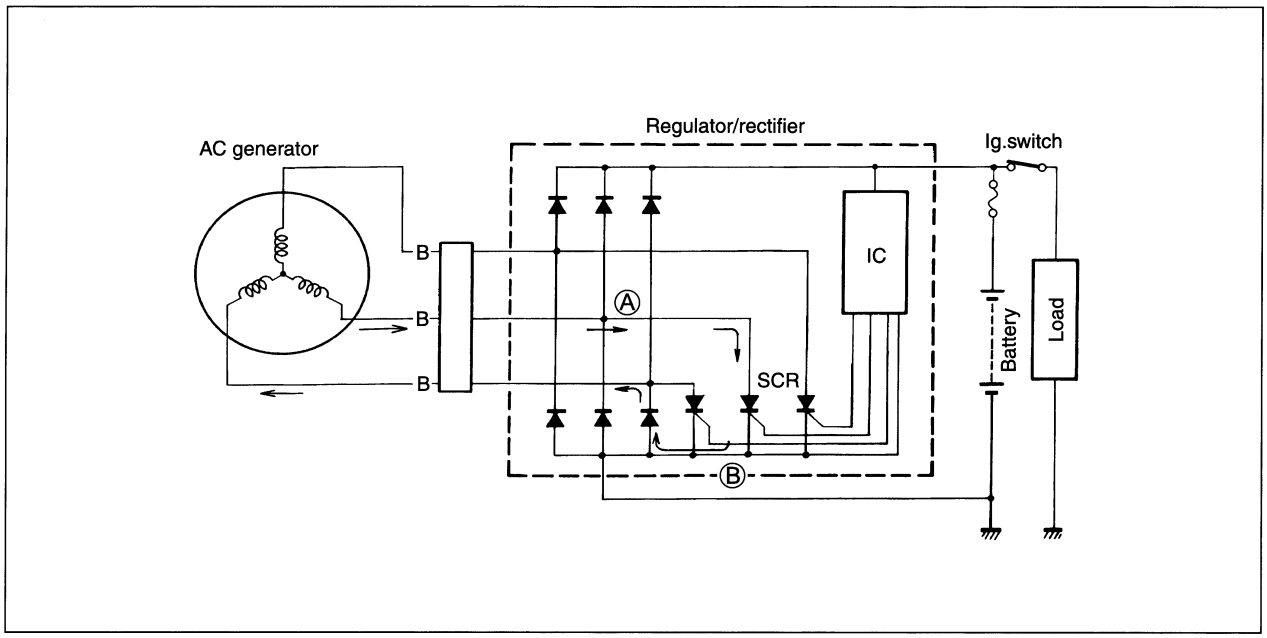

TROUBLESHOOTING

Battery runs down quickly.

Check accessories which use excessive amounts of electricity.
- Accessories are installed → • Remove accessories.
- No accessories ↓

Check the battery for current leaks. (☞ 7-10)
- Current leak → • Short circuit of wire harness • Loose or disconnected wires • Faulty battery
- No current leaks ↓

Measure the charging voltage between the battery terminals. (☞ 7-10)
- Correct → • Faulty battery • Abnormal driving condition
- Incorrect ↓

Measure the continuity of the generator coil. (☞ 7-11)
- No continuity → • Faulty generator coil or disconnected lead wires
- Continuity ↓

Inspect generator no-load voltage. (☞ 7-11)
- No good → • Faulty generator
- OK ↓

Inspect regulator/rectifier. (☞ 7-11)
- No good → • Faulty regulator/rectifier
- OK ↓

Inspect wirings.
- No good → • Short circuit of wire harness • Poor contact of couplers
- OK → • Faulty battery

Others

Battery overcharge	• Faulty regulator/rectifier • Faulty battery • Poor contact of generator lead wire coupler

INSPECTION

BATTERY CURRENT LEAK INSPECTION

- Turn the ignition switch to the "OFF" position.
- Remove the frame covers (R), (L), and the seat. (☞ 4-4)
- Remove the electric parts hold ①.
- Disconnect the battery ⊖ lead wire.
- Connect the multi circuit tester between the battery ⊖ terminal and the battery ⊖ lead wire.

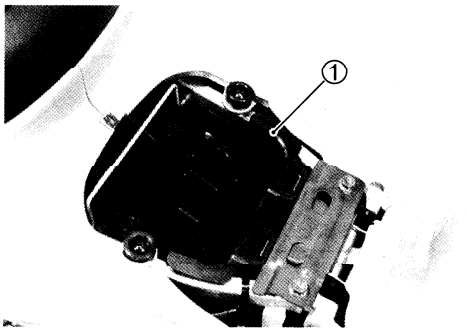

NOTE:
Leakage is evident if the reading is over 1 mA.

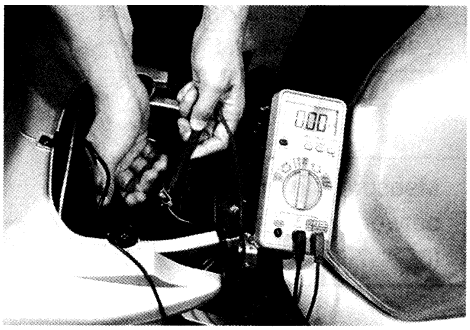

DATA Battery current leak: Under 1 mA

Tester knob indication: Current (⎓, 20 mA)

TOOL 09900-25008: Multi circuit tester set

⚠ CAUTION

- **Because the current leak might be large, turn the tester to the high range first to avoid tester damage.**
- **Do not turn the ignition switch to the "ON" position when measuring the current.**

When checking to find the excessive current leak, remove the couplers and connectors, one by one, checking each part.

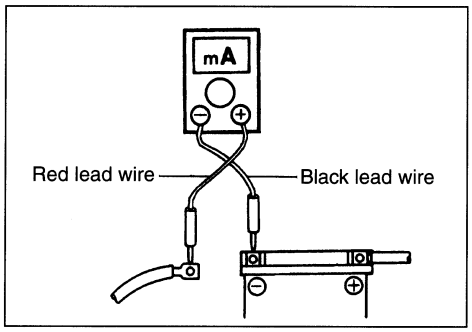

CHARGING OUTPUT INSPECTION

- Remove the fram covers (R), (L), and the seat. (☞ 4-4)
- Remove the electric parts holder.
- Start the engine, turn the lighting switch to ON and the dimmer switch to HI and run the engine at 5 000 r/min.

Measure the DC voltage between the battery ⊕ and ⊖ terminals using a multi-circuit tester. If the tester reads under 13.5V or over 15.0V, inspect the stator coil, regulator/rectifier which are mounted in the generator.

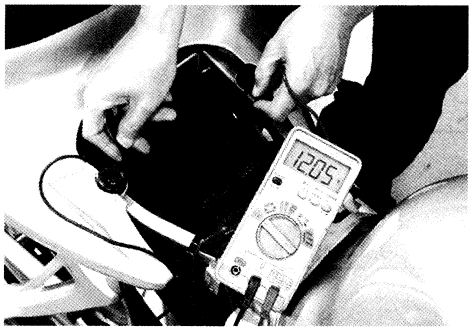

NOTE:
When performing this test, make sure that the battery is fully-charged.

TOOL 09900-25008: Multi circuit tester set

Tester knob indication: Voltage (⎓)

DATA Charging output (Regulated voltage)
Specification: 13.5 – 15.0V at 5 000 r/min.

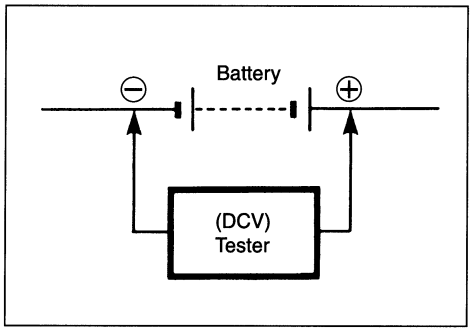

GENERATOR COIL RESISTANCE INSPECTION

- Remove the seat tail cover. (☞ 6-4)
- Disconnect the generator coupler ①.

Measure the resistance between the three lead wires.
Also check that the stator core is insulated.
If the resistance is not specified value, replace the stator with a new one.

TOOL 09900-25008: Multi circuit tester set

Tester knob indication: Resistance (Ω)

DATA Generator coil resistance
Specification: 0.2 – 0.55 Ω

NOTE:
When making above test, it is not necessary to remove the generator.

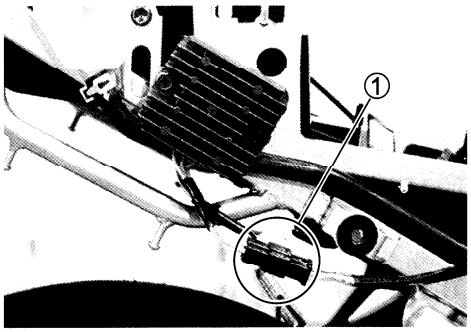

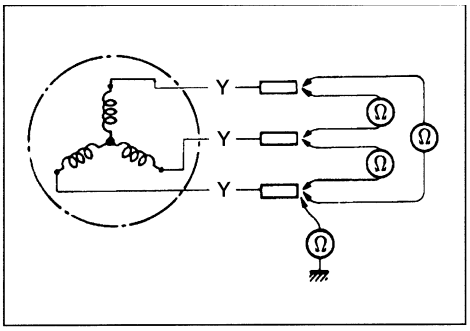

GENERATOR NO-LOAD PERFORMANCE INSPECTION

- Remove the seat tail cover. (☞ 6-4)
- Start the engine and keep it running at 5 000 r/min.

Using a multi circuit tester, measure the voltage between three lead wires.
If the tester reads under the specified value, replace the generator with a new one.

TOOL 09900-25008: Multi circuit tester set

Tester knob indication: Voltage (~)

DATA Generator no-load performance (When engine is cold)
Specification: More than 70V (AC) at 5 000 r/min

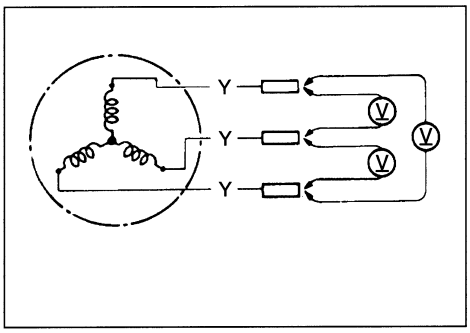

REGULATOR/RECTIFIER INSPECTION

- Remove the seat tail cover. (☞ 6-4)
- Disconnect the generator coupler ①.

Using a multi circuit tester, measure the voltage between the lead wires in the following table.
If voltage is incorrect, replace the regulator/rectifier.

TOOL 09900-25008: Multi circuit tester set

Tester knob indication: Diode test (⊣◀)

Unit: V

Probe of tester to: ⊖	⊕ Probe of tester to: R	Y1	Y2	Y3	B/W
R		0.4 – 0.7	0.4 – 0.7	0.4 – 0.7	0.5 – 0.8
Y1	Approx. 1.5		Approx. 1.5	Approx. 1.5	0.4 – 0.7
Y2	Approx. 1.5	Approx. 1.5		Approx. 1.5	0.4 – 0.7
Y3	Approx. 1.5	Approx. 1.5	Approx. 1.5		0.4 – 0.7
⊖ B/W	Approx. 1.5	Approx. 1.5	Approx. 1.5	Approx. 1.5	

B: Black, B/R: Black with Red tracer, B/W: Black with White tracer

NOTE:
If the tester read under 1.4V, replace the battery of multi circuit tester when do not connecting the tester probes.

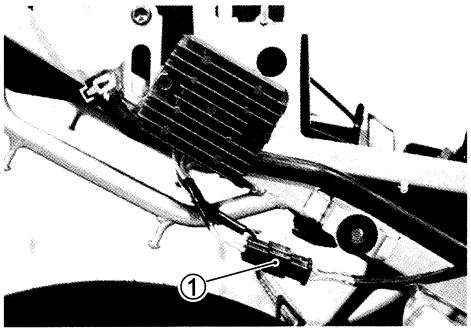

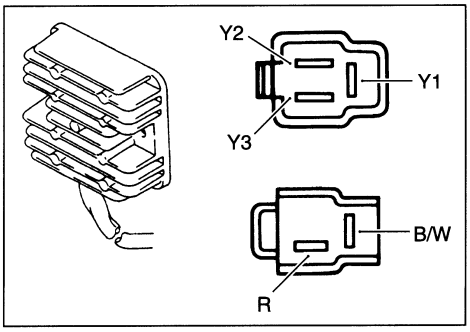

STARTER SYSTEM AND SIDE-STAND IGNITION INTERLOCK SYSTEM

STARTER SYSTEM DESCRIPTION

The starter system consists of the following components: the starter motor, starter relay, clutch lever position switch, turn signal/side-stand relay, side-stand switch, neutral switch, starter button, engine stop switch, ignition switch and battery. Pressing the starter button (on the right handlebar switch) energizes the starter relay, causing the contact points to close, thus completing the circuit from the starter motor to the battery. The starter motor draws about 80 amperes to start the engine.

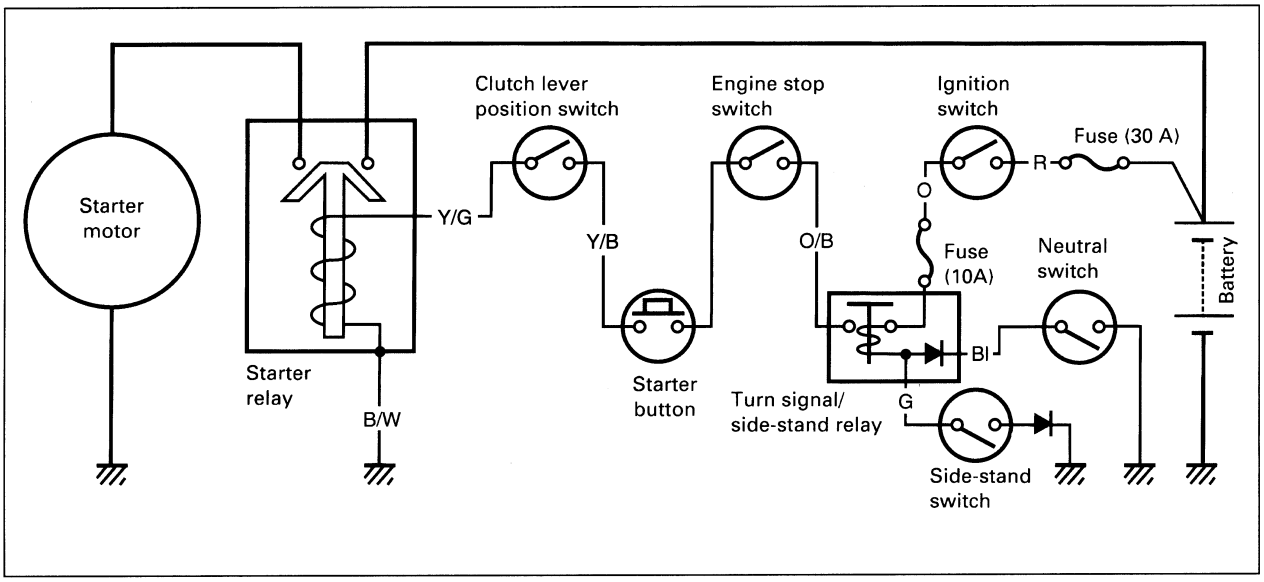

SIDE-STAND/IGNITION INTERLOCK SYSTEM DESCRIPTION

This side-stand/ignition interlock system prevents the motorcycle from being started with the sidestand down. The system is operated by an electric circuit provided between the battery and ignition coil.

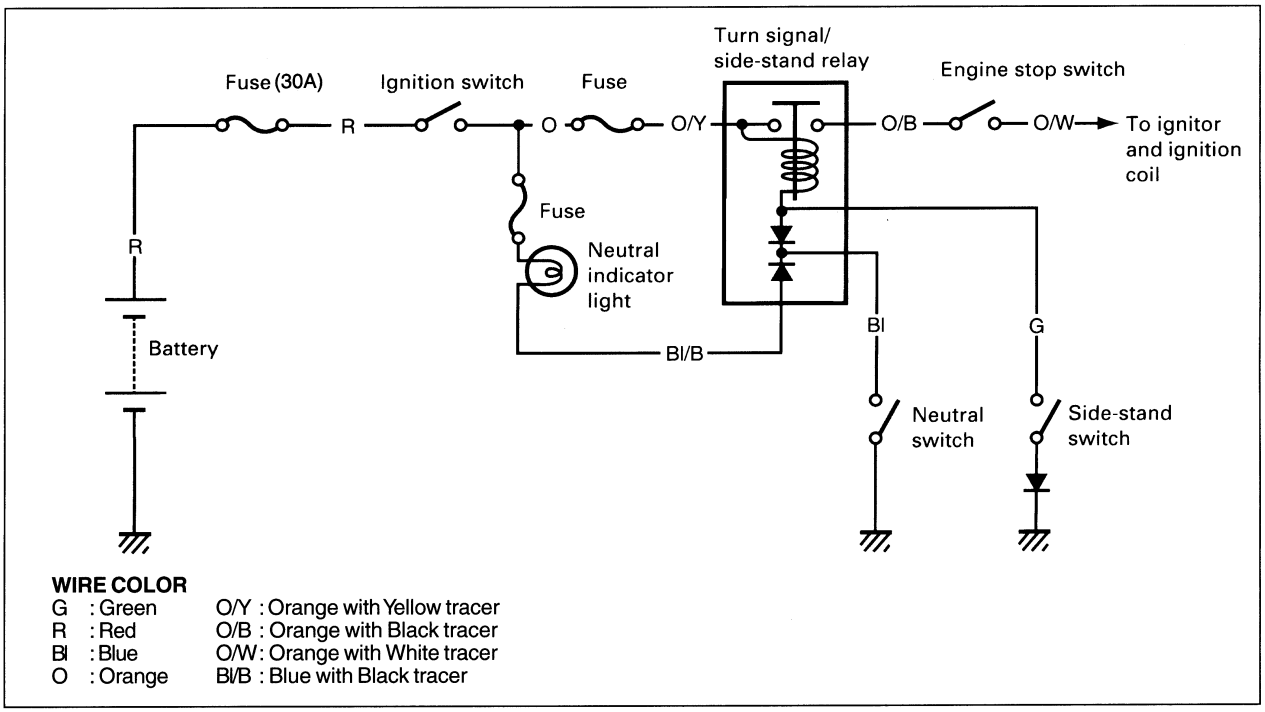

WIRE COLOR

G	: Green	O/Y	: Orange with Yellow tracer
R	: Red	O/B	: Orange with Black tracer
Bl	: Blue	O/W	: Orange with White tracer
O	: Orange	Bl/B	: Blue with Black tracer

The circuit consists of the turn signal/side-stand relay, neutral indicator light and switches. The ignition coils will send voltage to the spark plugs dependant on what gear the transmission is in and whether the side-stand is either up or down. The neutral and side-stand switches work together in this system.
The ignition coils work only in two situations as follows.

1. Transmission: Neutral (ON) Side-stand: Down (OFF)
   The current flow Ⓐ switches "ON" the side-stand relay and the ignition coils send voltage to the spark plugs even when the side-stand is kept down.

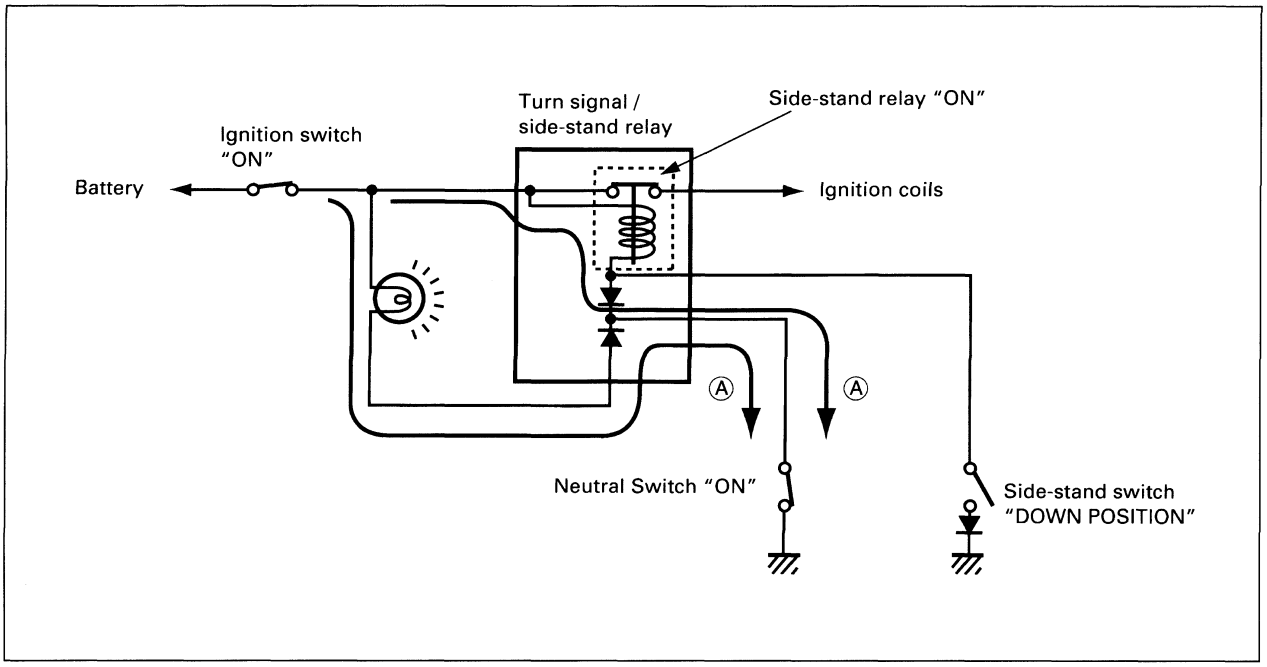

2. Side-stand: Up (ON)
   The current flow Ⓑ switches "ON" the side-stand relay and the ignition coils send voltage to the spark plugs. The engine can be started in any gear.

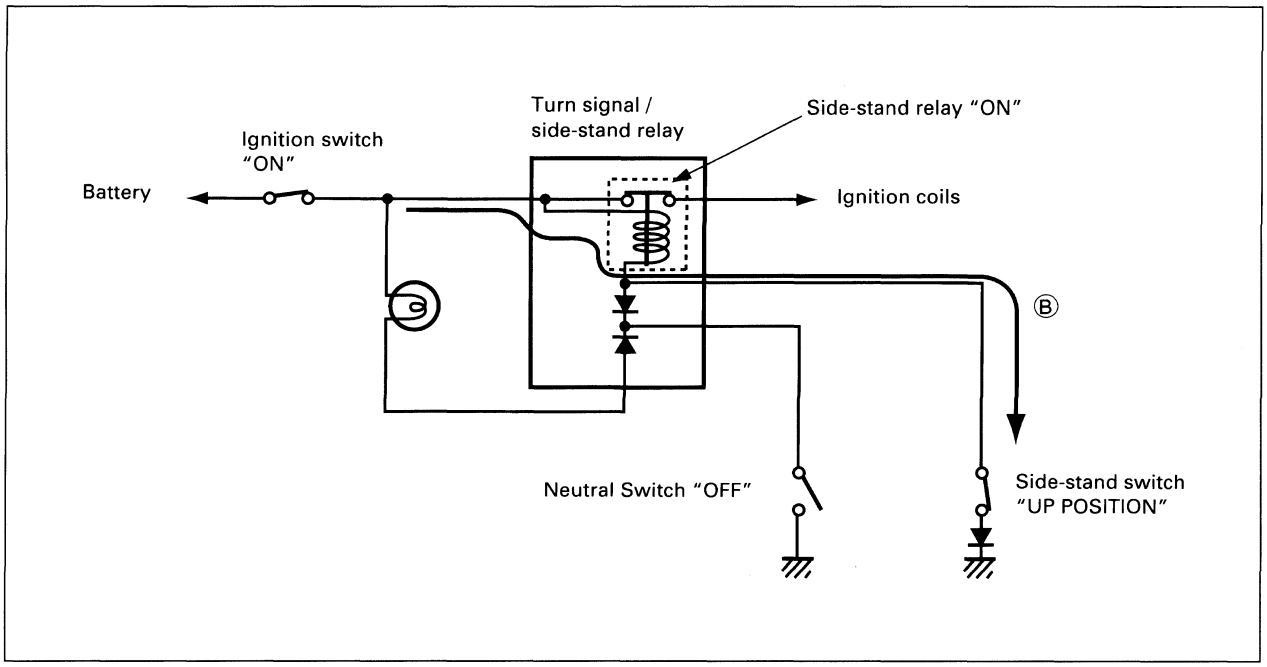

TROUBLE SHOOTING

Starter motor will not run.

The transmission is in neutral. Grasp the clutch lever. Turn on the ignition switch with the engine stop switch in the "RUN" position. Listen for a click from the starter relay when the starter button is pushed.

Clicks → Check if the starter motor runs when its terminal is connected to the battery ⊕ terminal (Do not use thin "wire" because a large amount of current flows)

- Runs → • Faulty starterrelay
  • Loose or disconnected starter motor lead wire
- Does not run → • Faulty starter motor

No click ↓

Measure the starter relay voltage at the starter relay connectors (between Y/G ⊕ and B/W ⊖) when the starter button is pushed.

No voltage →
- • Faulty ignition switch
- • Faulty engine stop switch
- • Faulty clutch lever position switch
- • Faulty neutral switch
- • Faulty turn signal/side-stand relay
- • Faulty starter button
- • Poor contact of connector
- • Open circuit in wire harness

Voltage ↓

Check the starter relay. (☞ 7-19)

No good → • Faulty starter relay

OK → • Poor contact of the starter relay

The starter motor runs when the transmission is in neutral, but does not run when the transmission is in any position other than neutral, with the side-stand up.

Check the side-stand switch. (☞ 7-20)

No good → • Faulty side-stand switch

OK →
- • Open circuit in wire harness
- • Poor contact of connector

Others

Engine does not turn though the starter motor runs.	• Faulty starter clutch

STARTER MOTOR REMOVAL AND DISASSEMBLY

- Disconnect the starter motor lead wire and remove the starter motor by removing the mounting bolts.

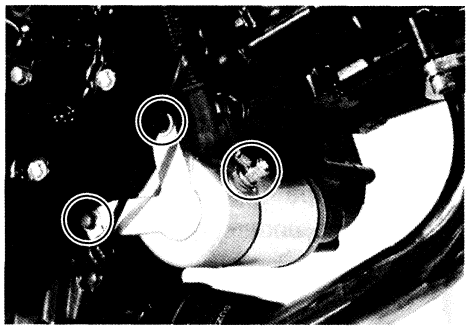

- Disassemble the starter motor, as shown in the illustration

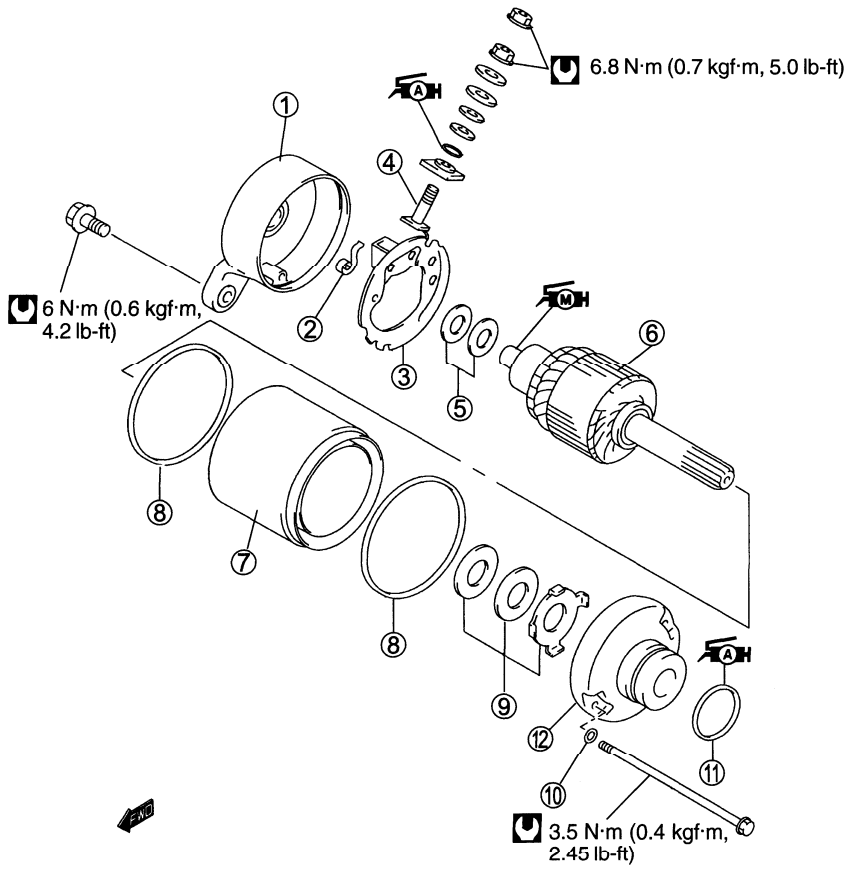

STARTER MOTOR INSPECTION

CARBON BRUSHES

Inspect the carbon brushes for abnormal wear, cracks or smoothness in the brush holder.

If either carbon brush is defective, replace the brush assembly.

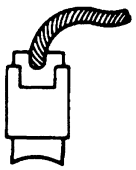

COMMUTATOR

Inspect the commutator for discoloration, abnormal wear or undercut Ⓐ.
If the commutator is abnormally worn, replace the armature.
If the commutator surface is discolored, polish it with #400 sandpaper and wipe it using a clean, dry cloth.
If there is no undercut, scrape out the insulator ① with a saw blade.

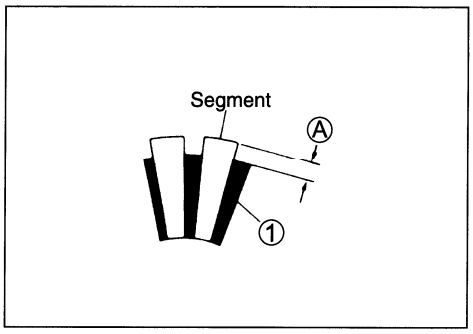

ARMATURE COIL INSPECTION

Measure for continuity between each segment.
Measure for continuity between each segment and the armature shaft.
If there is no continuity between the segments or there is continuity between the segments and shaft, replace the starter motor with a new one.

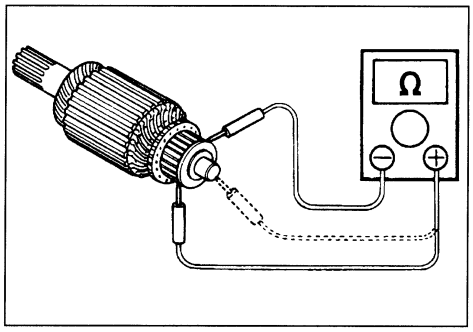

OIL SEAL INSPECTION

Check the seal lip for damage or leakage.
If any damage is found, replace the housing end (inside).

STARTER MOTOR REASSEMBLY

Reassemble the starter motor in the reverse order of disassembly. Pay attention to the following points:

⚠ CAUTION

Replace the O-rings with new ones to prevent oil leakage and moisture.

- Apply SUZUKI SUPER GREASE "A" to the lip of the oil seal.

99000-25030: SUZUKI SUPER GREASE "A"

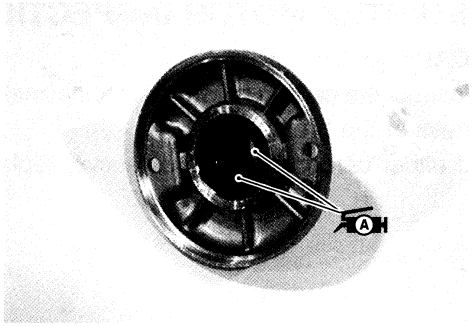

- Apply a small quantity of SUZUKI MOLY PASTE to the armature shaft.

99000-25140: SUZUKI MOLY PASTE

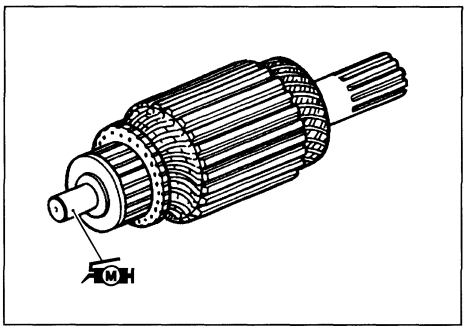

- Install the spacer ① to brush terminal.

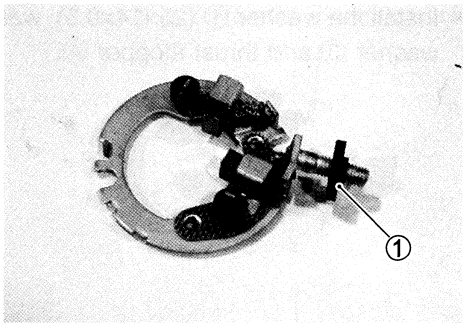

- When installing the brash holder on the near bracket, align the groove Ⓐ of the rear bracket with the projection Ⓑ of the brush holder.

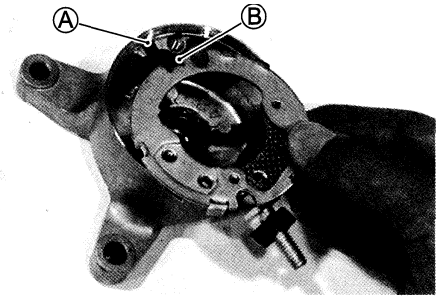

- Install the O-ring ①, washers ② (12×6.5×2) washer ③ (16×6.5×1), washer ④ (14×6.5×1) and nut ⑤.

⚠ CAUTION

Replace the O-rings with new ones to prevent oil leakage and moisture.

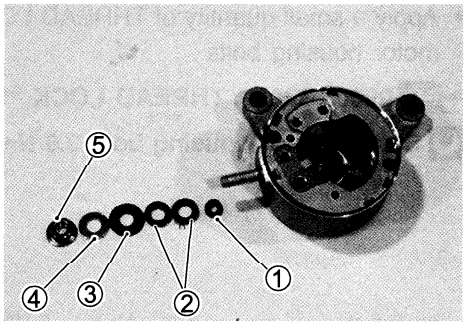

- Install the washer ①. (18×9×0.8), washer (18×9×0.2)

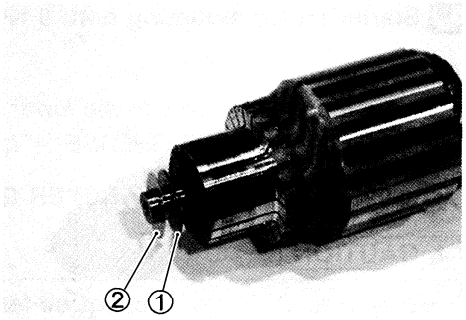

- Install the square ② to starter motor case ①.
- When install the rear bracket to starter motor, align the marks Ⓐ on the rear bracket with cut point Ⓑ at the starter motor case.

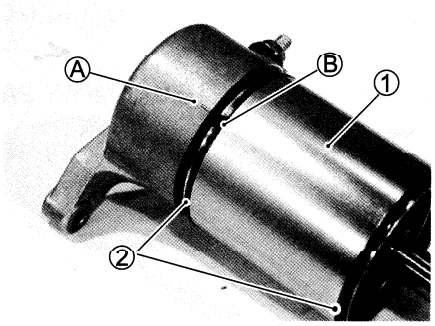

⚠ CAUTION

Replace the square rings with new ones to prevent oil leakage and moisture.

- Install the washer ① (25×14×0.5), washer ② (25×14×0.2), slip washer ③ and thrust stopper ④.

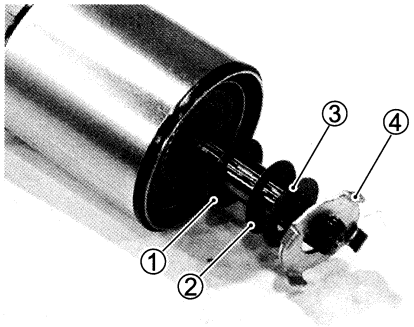

- Install the front bracket.
- Align the marks Ⓐ on the front bracket with much the marks Ⓑ on the rear bracket.

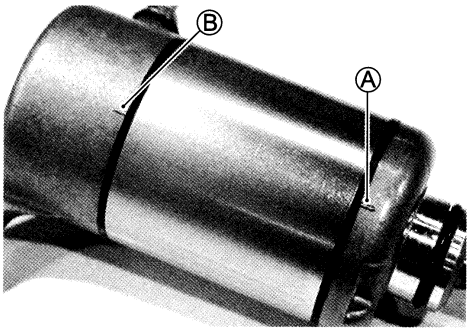

- Apply a small quantity of THREAD LOCK "1342" to the starter motor housing bolts.

1342 99000-32050: THREAD LOCK "1342"

Starter motor housing bolt: 3.5 N·m (0.4 kgf·m 2.45 lb-ft)

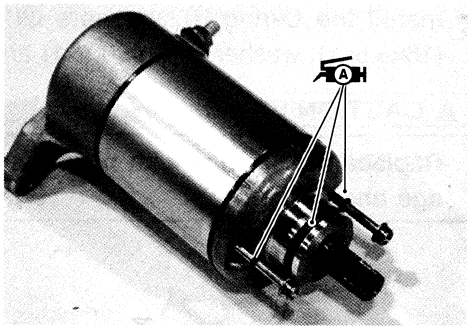

- Install the starter motor with two bolts.

Starter motor mounting bolt: 6 N·m (0.6 kgf·m 4.2 lb-ft)

NOTE:

** Fit the ground lead wire to the lower bolt as shown.*

** Apply SUZUKI SUPER GREASE "A" to the starter motor O-ring.*

A H 99000-25030: SUZUKI SUPER GREASE "A"

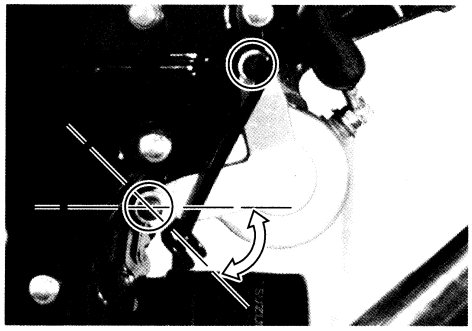

⚠ CAUTION

Use a new O-ring to prevent oil leakage.

- Connect the starter motor read wire as shown, and fit the cap ①.

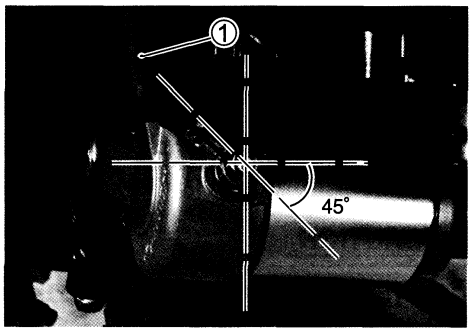

STARTER RELAY INSPECTION

- Remove the frame covers (R), (L). (☞ 6-3)
- Remove the seat and electric parts holder.
- Disconnect the battery ⊖ lead wire.

- Disconnect the starter relay coupler ①.
- Remove the starter relay cover ②.

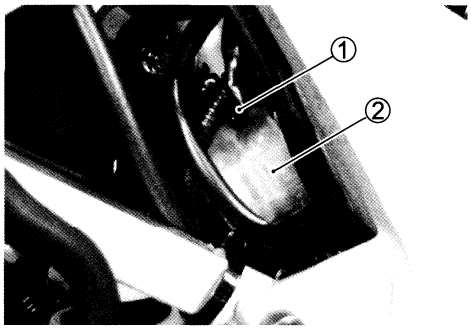

- Disconnect the starter motor lead wire ③ and battery lead wire ④ at the starter relay.
- Remove the starter relay.

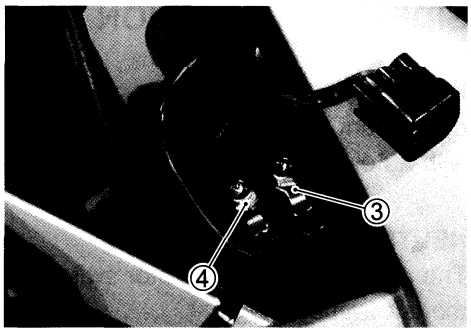

Apply 12 volts to terminals Ⓐ and Ⓑ and measure for continuity between the positive and negative terminals.
If the starter relay clicks and continuity is found, the relay is ok.

TOOL 09900-25008: Multi circuit tester set

Tester knob indication: Continuity test (•)))

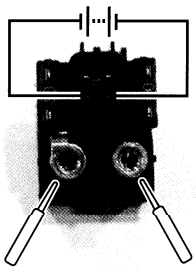

⚠ CAUTION

Do not apply battery voltage to the starter relay for more than five seconds.
This may overheat and damage the relay coil.

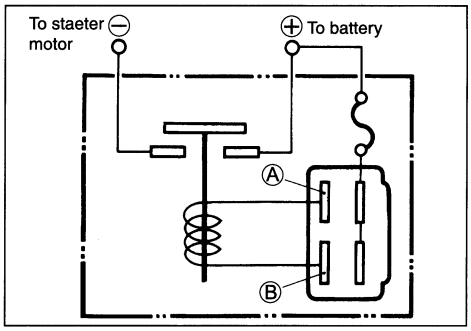

- Check the relay coil for resistance between terminal Ⓐ and terminal Ⓑ.

DATA Starter relay resistance
Specification: 3 – 6 Ω

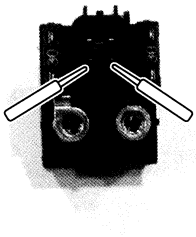

SIDE-STAND/IGNITION INTERLOCK SYSTEM PART INSPECTION

If the interlock system does not operate properly, check each component. If any abnormality is found, replace the component with a new one.

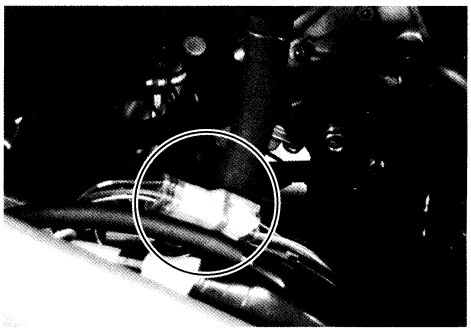

NEUTRAL SWITCH

The neutral position indicator switch coupler is located inside of the left frame.

- Life and support the fuel tank with its prop stay. (☞ 4-4)
- Disconnect the neutral position indicator switch coupler and measure the continuity between Blue and Ground with the transmission in neutral.

	Blue	Ground
ON (in neutral)	○———	———○
OFF (not in neutral)		

SIDE-STAND SWITCH

The side-stand switch coupler is located inside of the left fram.

- Lift and support the fuel tank with its prop stay. (☞ 4-4)
- Disconnect the side-stand switch lead wire coupler ① and measure the voltage between Green and Black/White lead wires.

TOOL 09900-25008:Multi circuit tester set

Tester knob indication: Diode test (⊣◀)

	Green (⊕ Probe)	Black/White (⊖ Probe)
ON (UP-right position)	0.4 – 0.6 V	
OFF (Down position)	1.4 – 1.5 V	

NOTE:
If the tester read under 1.4V, replace the battery of multi circuit tester when do not connecting the tester probes.

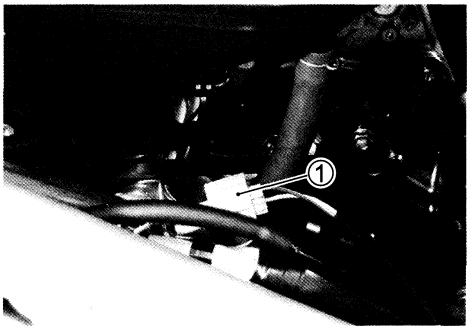

TURN SIGNAL/SIDE-STAND RELAY

The turn signal relay is corporated with the side-stand relay and diode to form the one component part which is called the turn signal/side-stand relay. It is located under the seat.

- Remove the frame covers (R), (L), and seat.
- Remove the turn signal relay ①.

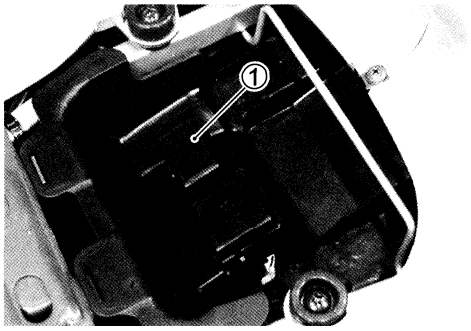

SIDE-STAND RELAY INSPECTION

First, check the insulation between Ⓓ and Ⓔ terminals with tester. Then apply 12 volts to Ⓓ and Ⓒ terminals, ⊕ to Ⓓ and ⊖ to Ⓒ, and check the continuity between Ⓓ and Ⓔ. If there is no continuity, replace turn signal/side-stand relay with a new one.

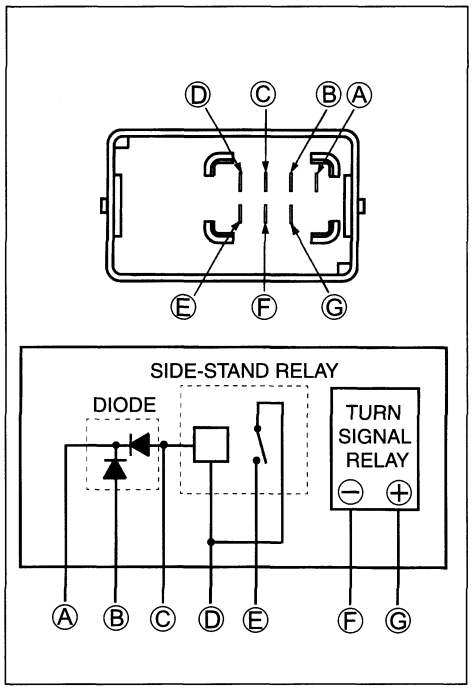

DIODE INSPECTION

Using multi circuit tester, measure the voltage between the terminals in the following table.

Unit: V

⊖ Probe of tester to:	⊕ Probe of tester to:		
		Ⓒ,Ⓑ	Ⓐ
	Ⓒ,Ⓑ		1.4 – 1.5
	Ⓐ	0.4 – 0.6	

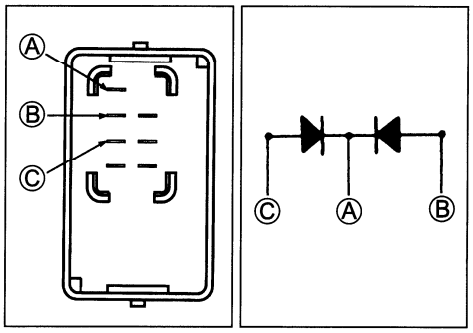

TOOL 09900-25008: Multi circuit tester set

Tester knob indication: Diode test (⊣◀⊢)

NOTE:

If the tester read under 1.4V, replace the battery of multi circuit tester when do not connecting the tester probes.

IGNITION SYSTEM (DIGITAL IGNITOR)

DESCRIPTION

The fully transistorized ignition system consists of the following components: a signal generator (which is made up of the generator rotor and pickup coil), ignitor (including a 8-bit microcomputer), throttle position sensor, two ignition coils and two spark plugs.

The induced signal in the signal generator is sent to the wave-form arrangement circuit and the I.C. receives this signal and calculates the ignition timing. And also the signals of the throttle position sensor revise ignition timing properly. The I.C. outputs the signal to the transistor of the ignition coil output circuit which is connected to the primary windings of the ignition coils which is turned "off" and "on" accordingly. Thus, it induces the secondary current in the ignition coil's secondary windings and produces the spark between the spark plug gaps.

The ignition cutoff circuit is incorporated in the ignitor to prevent the engine from overreving. If the engine speed reaches 10 500 r/min, this circuit will cutoff the ignition primary current for one of the spark plugs.

▲ CAUTION

The engine is capable of running at over 10 500 r/min without a load, even if the ignition cutoff circuit is in effect; however, this may cause engine damage. Therefore, never run the engine over 10 500 r/min without a load.

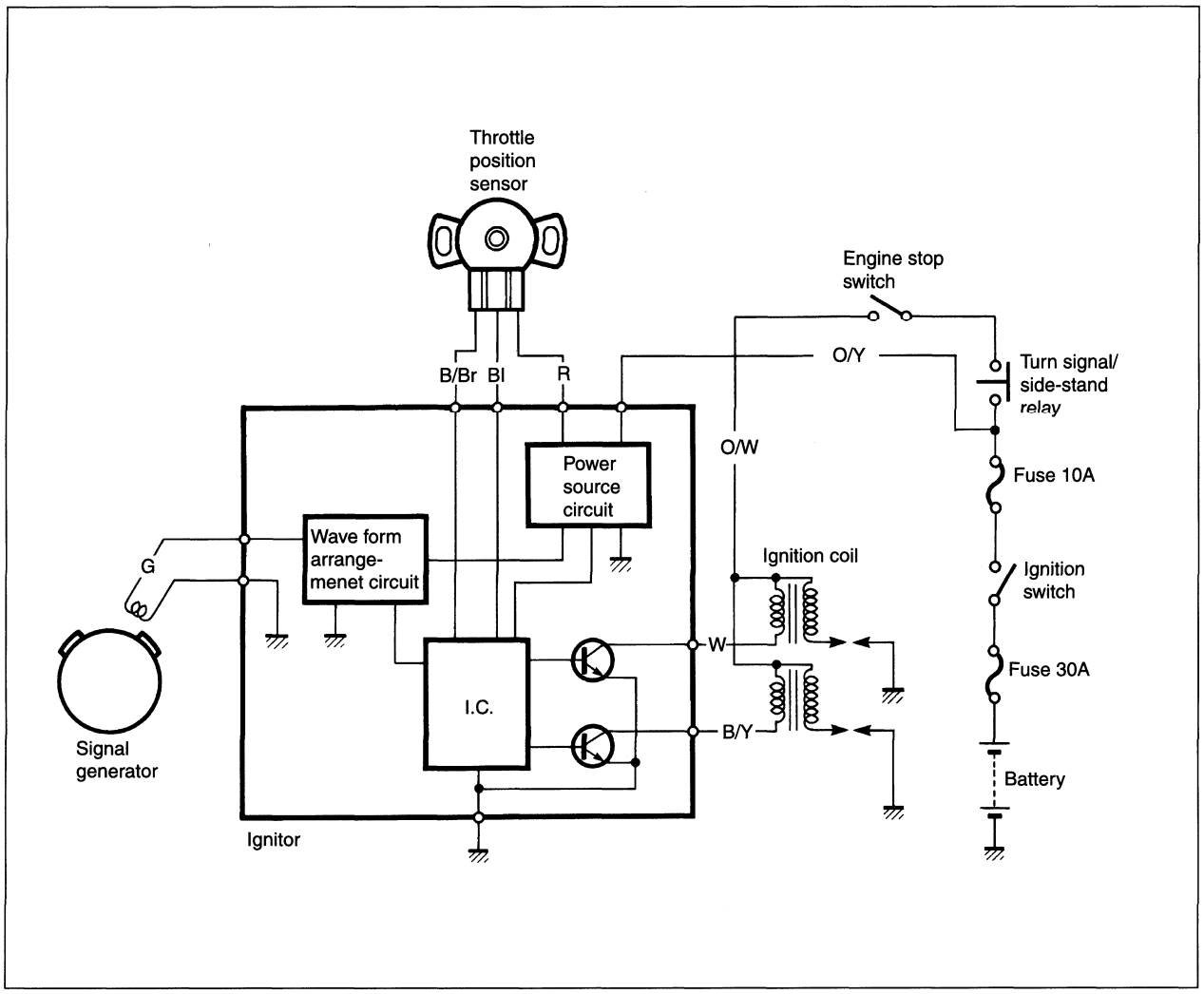

TROUBLESHOOTING

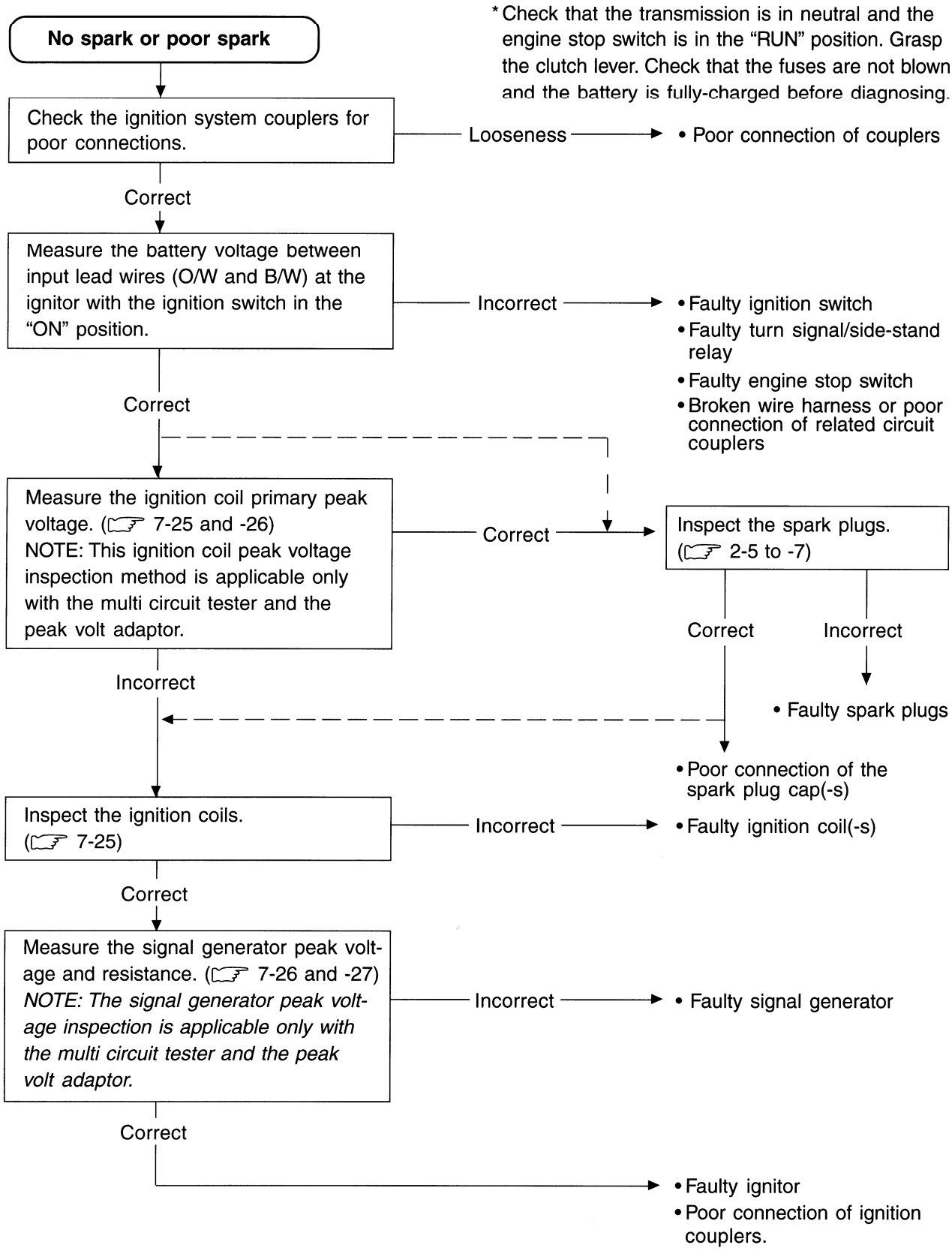

INSPECTION

IGNITION COIL PRIMARY PEAK VOLTAGE

- Lift and support the fuel tank with its prop stay. (☞ 4-4)
- Remove all of the spark plug caps. (☞ 2-5)
- Connect two new spark plugs to each spark plug cap and ground them to the cylinder head.

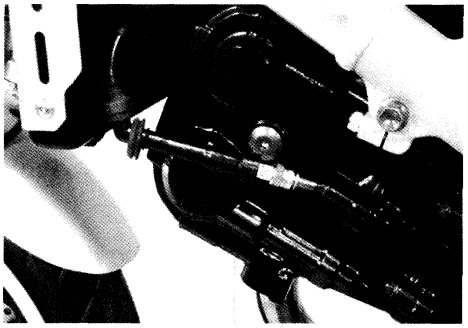

NOTE:
Make sure that all of the spark plug caps and spark plugs are connected properly and the battery is fully-charged.

Measure ignition coil (for #1 cylinder) primary peak voltage in the following procedure.

- Connect the multi circuit tester with the peak voltage adaptor as follows.

Ignition coil (For #1 cylinder): B/Y terminal – Ground
(⊕ Probe) (⊖ Probe)

B/Y: Black with Yellow tracer

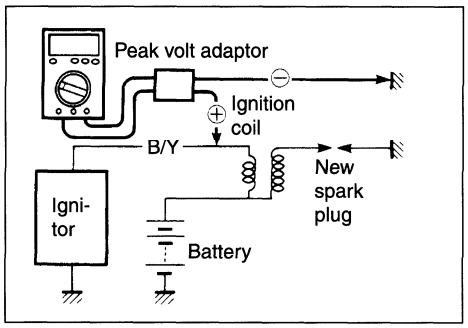

NOTE:
Do not disconnect the ignition coil primary wire.

TOOL 09900-25008: Multi circuit tester set

⚠ CAUTION

When using the multi circuit tester and peak volt adaptor, refer to the appropriate instruction manual.

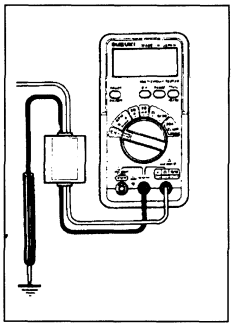

- Shift the transmission into neutral, turn the ignition switch to the "ON" position and grasp the clutch lever.
- Press the starter button and allow the engine to crank for a few seconds, and then measure the ignition coil primary peak voltage.
- Repeat the above procedure a few times and measure the highest ignition coil primary peak voltage.

Tester knob indication: Voltage (⎓)

DATA Ignition coil primary peak voltage (# 1)

Specification: More than 150 V

⚠ WARNING

While testing, do not touch the tester probes and spark plugs to prevent receiving an electric shock.

Measure ignition coil (For #2 cylinder) primary peak voltage in the same manner as cylinder ignition coil (For #1 cylinder) measuring procedure.

Ignition coil (For #2 cylinder): White terminal – Ground
(⊕ Probe) (⊖ Probe)

NOTE:
Do not disconnect the ignition coil primary wire.

Tester knob indication: Voltage (⎓)

DATA Ignition coil primary peak voltage (# 2)
Specification: More than 150 V

If the voltages are lower than the standard values, inspect the ignition coil and the signal generator. (☞ 7-26 to -27)

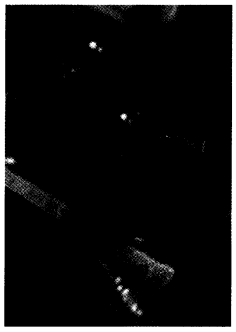

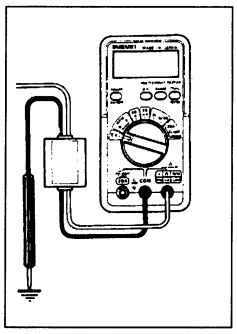

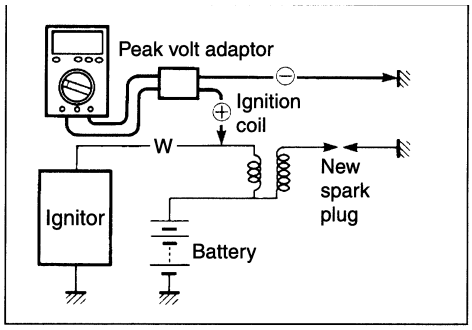

IGNITION COIL RESISTANCE

- Measure the ignition coil resistance in both the primary and secondary windings. If the windings are in sound condition, their resistance should be close to the specified values.

DATA Ignition coil resistance
Primary: 3.5 – 5.5 Ω (⊕ tap – ⊖ tap)
Secondary: 20 – 31 kΩ (Spark plug cap – ⊕ tap)

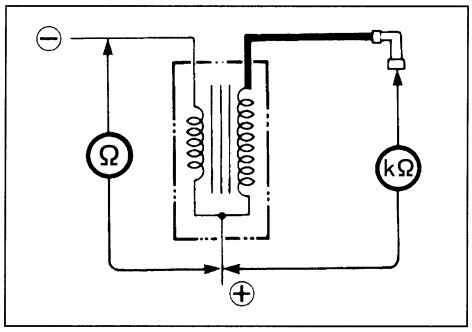

SIGNAL GENERATOR PEAK VOLTAGE

- Remove the rear seat. (☞ 4-4)

NOTE:
Be sure that all of the couplers are connected properly and the battery is fully-charged.

- Disconnect the ignitor coupler ① at the ignitor.

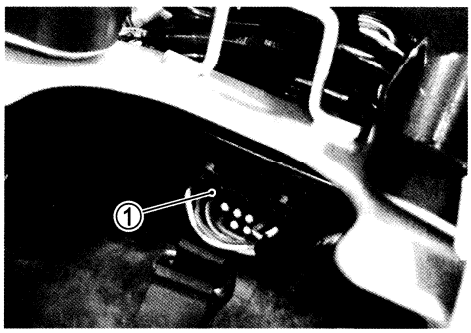

- Measure the signal generator peak voltage between the Green and Brown lead wires on the ignitor coupler.
- Connect the multi circuit tester with the peak voltage adaptor as follows.

Green (⊕ Probe) – White/Blue (⊖ Probe)

TOOL 09900-25008: Multi circuit tester set

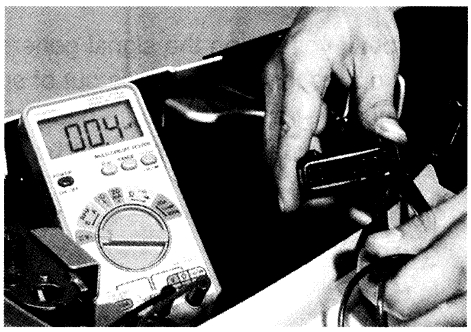

NOTE:
* *When connecting the multi circuit tester, install a sting (O.D. is below 0.5 mm) to the back side of the ignitor coupler and connect the probes of tester to them.*
* *Use a sting, its outer diameter is below 0.5 mm, to prevent damaging the rubber of the water proof coupler.*

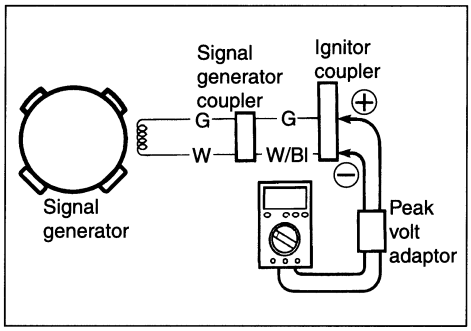

⚠ CAUTION

When using the multi circuit tester and peak volt adaptor, refer to the appropriate instruction manual.

- Shift the transmission into neutral, turn the ignition switch to the "ON" position and grasp the clutch lever.
- Press the starter button and allow the engine to crank for a few seconds, and then measure the signal generator peak voltage.
- Repeat the above procedure a few times and measure the highest signal generator peak voltage.

Tester knob indication: Voltage (⎓)

DATA Signal generator peak voltage
Specification: More than 3.0 V (Green – White/Blue)

If the peak voltage measured on the ignitor coupler is lower than the standard value, measure the peak voltage on the signal generator coupler as follows.

- Remove the seat tail cover. (☞ 6-4)
- Disconnect the signal generator coupler and connect the multi circuit tester with the peak volt adaptor.

Green (⊕ Probe) – White (⊖ Probe)

- Measure the signal generator peak voltage in the same manner as on the ignitor coupler.

Tester knob indication: Voltage (⎓)

DATA Signal generator peak voltage
Specification:More than 3.0 V (Green – White)

If the peak voltage on the signal generator lead wire couplers is ok but on the ignitor coupler is out of specification, the wire harness must be replaced. If both peak voltages are out of specification, the signal generator must be replaced and re-checked.

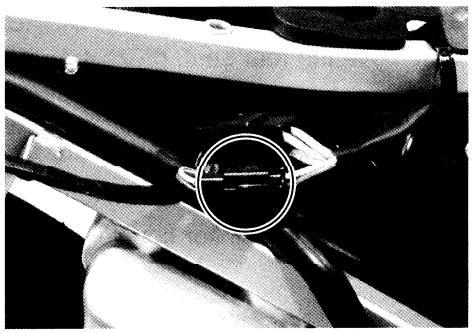

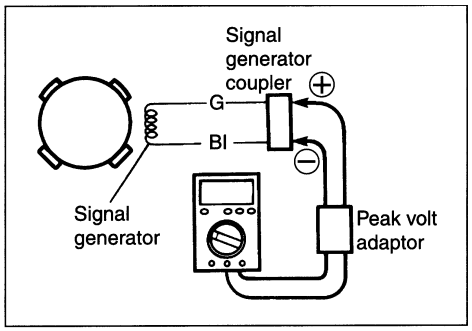

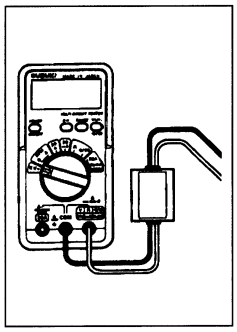

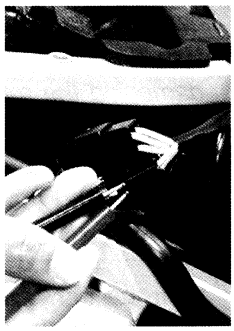

SIGNAL GENERATOR

- Remove the secondary gear case cover and disconnect the signal generator couplers.
- Measure the resistance between the lead wires and ground. If the resistance is not within the specified value, the signal generator stator must be replaced.

DATA Signal coil resistance
Specification:140 – 230 Ω (Green – White)
∞Ω (White – Ground)

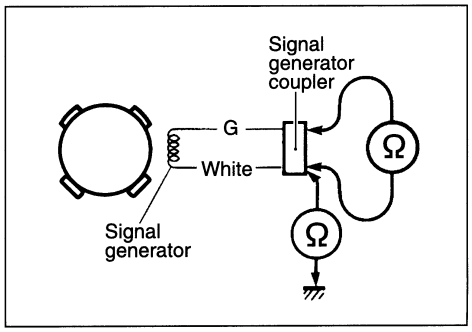

NOTE:
Refer to the section 3 for signal generator replacement.

SPEEDOMETER

REMOVAL

- Remove the headlight with two screws.

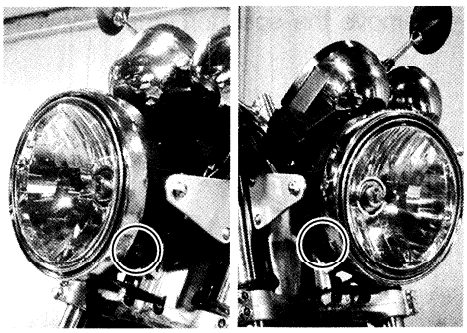

- Disconnect the socket ①.

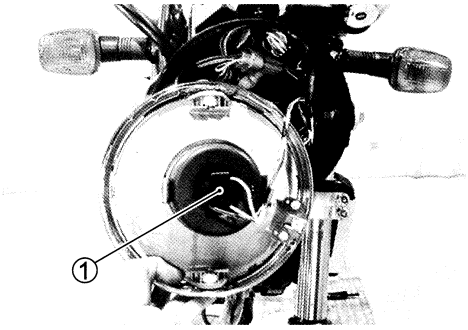

- Disconnect all the lead wire couplers and remove the lead wires from clamp.

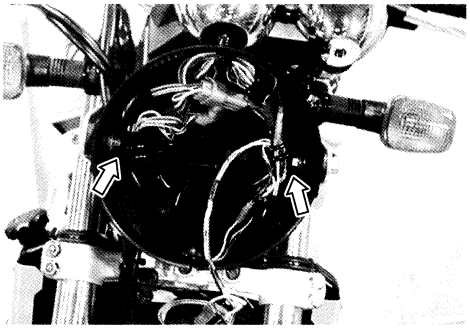

- Remove the headlight housing by removing the headlight housing bolts.

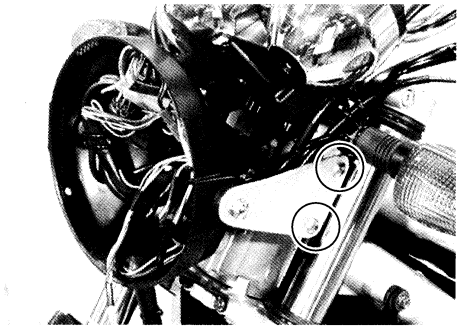

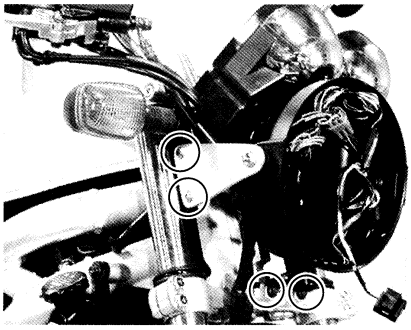

- Remove the speedometer assy with speedometer bolts.

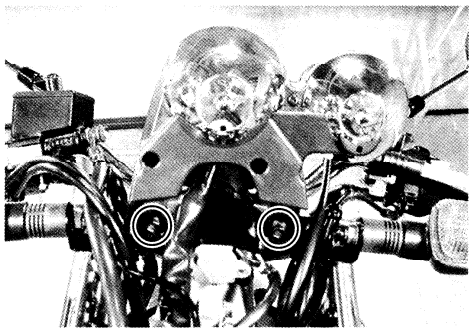

BULB REPLACEMENT

- Remove all the screws.
- Remove the speedometer housing.

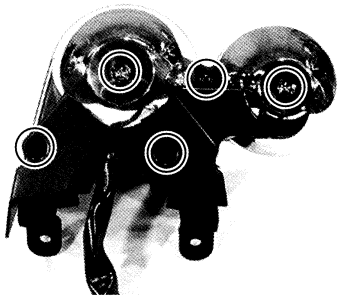

- Remove the meter bracket by removing the nuts.

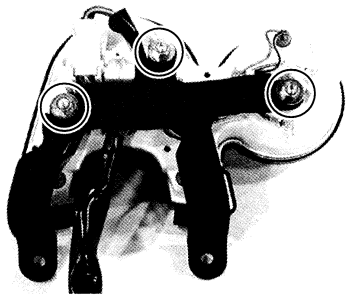

- Remove the sockets and replace the bulbs.
- Reassemble and remount the speedometer assy in the reverse order of removal and disassembly.

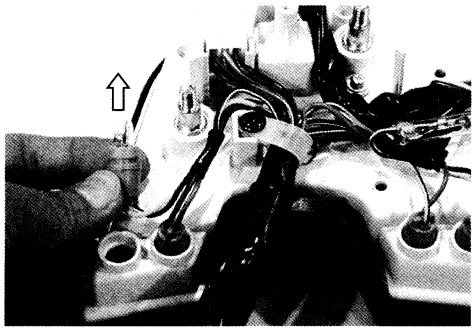

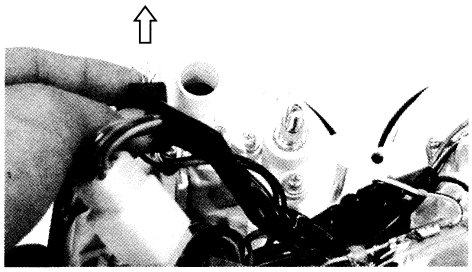

Construction

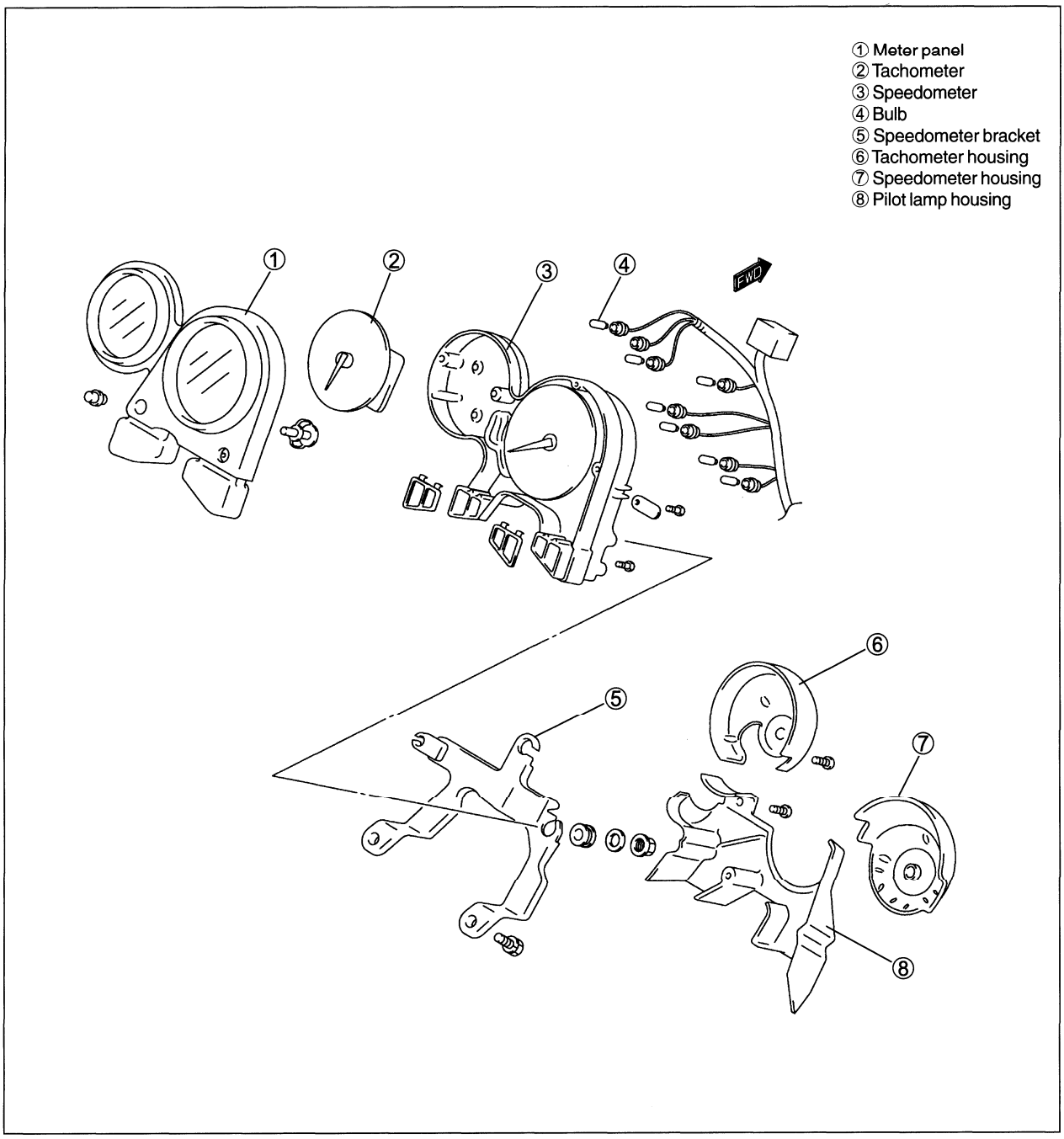

INSPECTION

Using the tester, check the continuity between terminals in the following diagram. If the continuity measured is incorrect, remove and check the bulb.

If the bulb is failure, install the new bulb and check the continuity again. If the bulb is correct, replace the unit with a new one.

ITEM	⊕ Probe of tester to:	⊖ Probe of tester to:
TURN SIGNAL	⑪, ⑫	⑧
FUEL	②	⑤⑥
NEUTRAL	②	⑬
HI BEAM	⑩	⑧
OIL	②	⑦
OIL (LED)	②	⑦
WATER TEMPERATURE (LED)	②	⑮
METER ILLUMINATION	⑨	⑧

①	BATTERY ⊕
②	IGNITION ⊕
③	SPEED SENSOR ⊕
④	IGNITION COIL (SIGNAL)
⑤	FUEL LEVEL GAUGE B
⑥	FUEL LEVEL GAUGE A
⑦	OIL PRESSURE GAUGE
⑧	GROUND (POWER)
⑨	ILLUMINATION ⊕
⑩	HIGH BEAM ⊕
⑪	TURN (L) ⊕
⑫	TURN (R) ⊕
⑬	NEUTRAL SWITCH
⑭	SPEED SENSOR (SIGNAL)
⑮	WATER TEMPERATURE SWITCH
⑯	GROUND (SIGNAL)

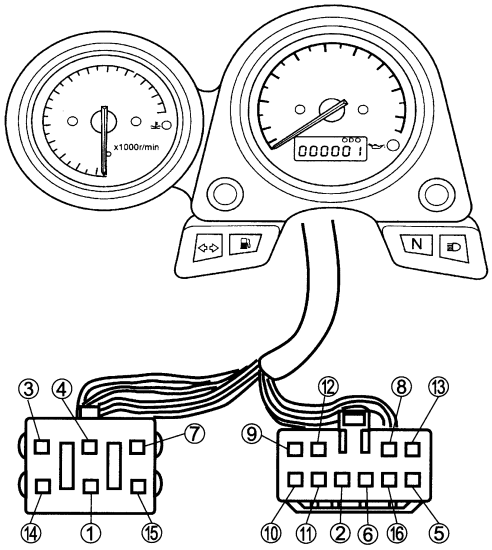

Tester knob indication: Diode test (⊣◀⊢)

FUEL LEVEL INDICATOR LIGHT INSPECTION

- Lift the fuel tank and support it by prop. (☞ 4-4)
- Disconnect the oil pressure switch lead wire coupler.
- The fuel indicator light lights up for approx. 3 seconds after the ignition switch is turned on then the indicator light should go out.
- Disconnect the fuel level indicator switch lead wire coupler ①.
- Connect a jumper wire between B/W lead and R/B lead coming from the main wiring harness and check whether fuel indicator light is flickering.
- Check if the fuel indicator light will go out within approx. 30 seconds, when disconnecting a jumper wire.

B/W: Black with White tracer
R/B: Red with Black tracer

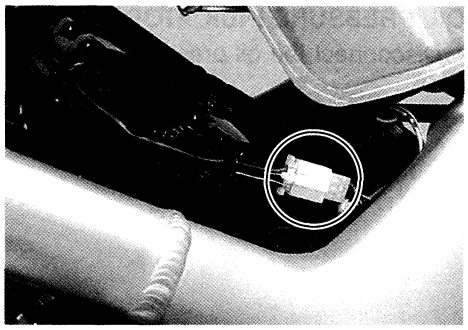

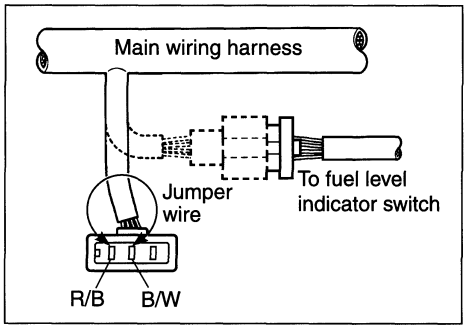

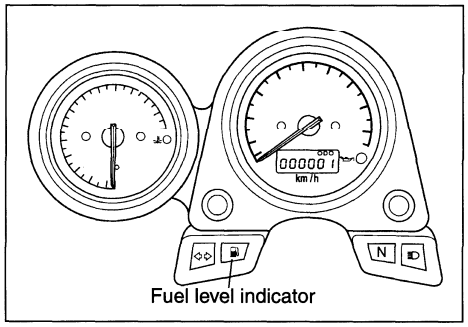

- Connect jumper wires between B/W lead and R/B lead and B/W lead and B/Lg lead coming from the main wiring harness and check whether the fuel indicator light comes on.
- Check if the fuel indicator light will go out within approx. 30 seconds, when disconnecting jumper wires.

R/B: Red with Black tracer
B/W: Black with White tracer
B/Lg: Black with Light green tracer

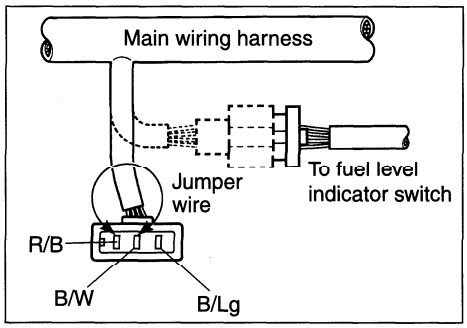

If the fuel indicator light does not function properly, check the bulb. If the bulb is in good condition, replace the meter with a new one.

OIL PRESSURE INDICATOR LIGHT INSPECTION

- Disconnect the oil pressure indicator switch lead wire coupler.

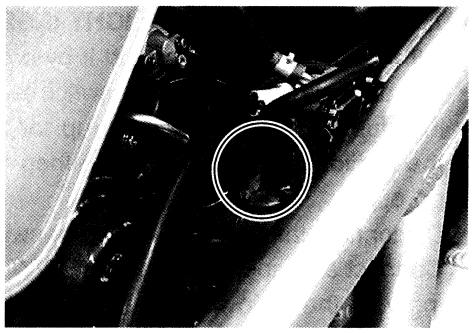

- Ignition switch turns "ON".
- Check if the oil pressure indicator lights up when grounding the lead wire coming from the main wiring harness with a jumper wire.

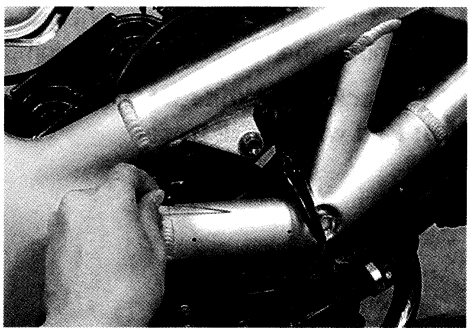

WATAR TEMPERATURE INDICATOR LIGHT INSPECTION

- Lift the fuel tank and support it by prop. (☞ 4-4)
- Ignition switch turns "ON".
- Disconnect the water temperature switch lead wire coupler.
- Check if the water temperature indicator lights up when grounding the lead wire coming from the main wiring harness with a jump wire.

SPEED SENSOR INSPECTION

- Remove the headlight with two screws.

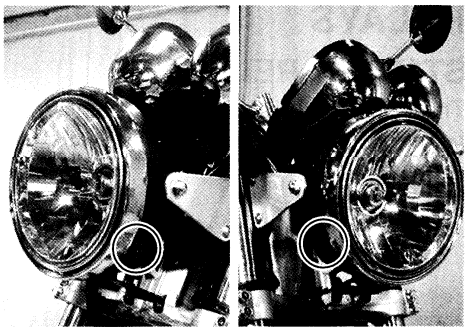

- Disconnect the speed sensor coupler.

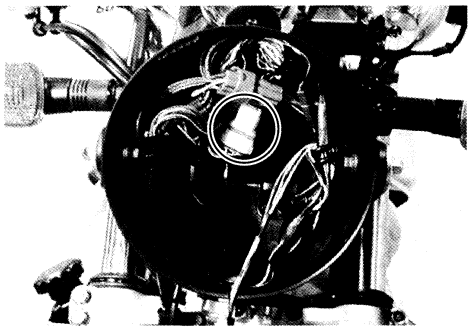

- Connect four 1.5V dry cells, 1kΩ resistance and the tester to the speed sensor lead coupler as shown.

TOOL 09900-25008: Multi-circuit tester

Tester knob indication: Voltage (⎓)

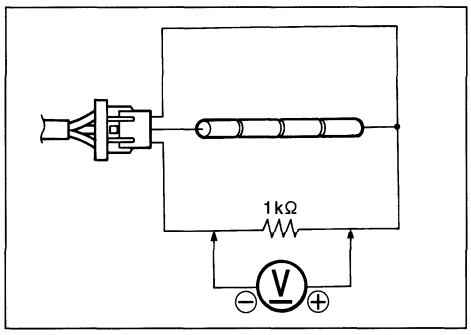

Lift and turn the front wheel and check that voltage varies between 0 – 6 V.
If any abnormal condition is noted, replace the sensor.

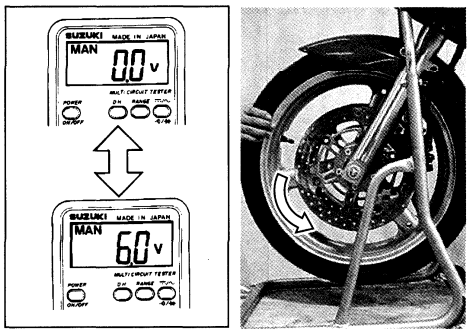

RELAYS

STARTER RELAY

The starter relay is located behind the left side upper cover.
(☞ 7-19 and -20)

TURN SIGNAL SIDE-STAND RELAY

The turn signal relay is corporated with the side-stand relay and diode to form the one component part which is called the turn signal/side-stand relay.
It is located under the seat.

- Remove the frame covers (R), (L) and seat.
- Remove the turn signal relay ①.

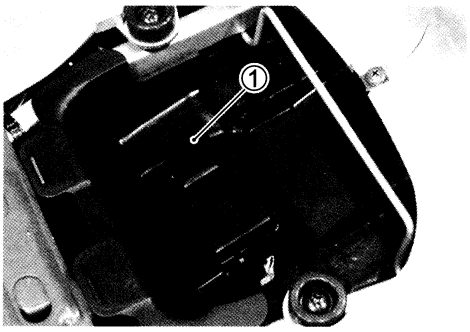

INSPECTION

Before removing the turn signal/side-stand relay, check the operation of the turn signal light.
If the turn signal light does not light, inspect the bulb, turn signal switch and circuit connection.
If the bulb, turn signal switch and circuit connection checked are all right, the turn signal relay may be faulty, replace turn signal/side-stand relay with a new one.

NOTE:
Be sure that the battery used is in fully-charged condition.

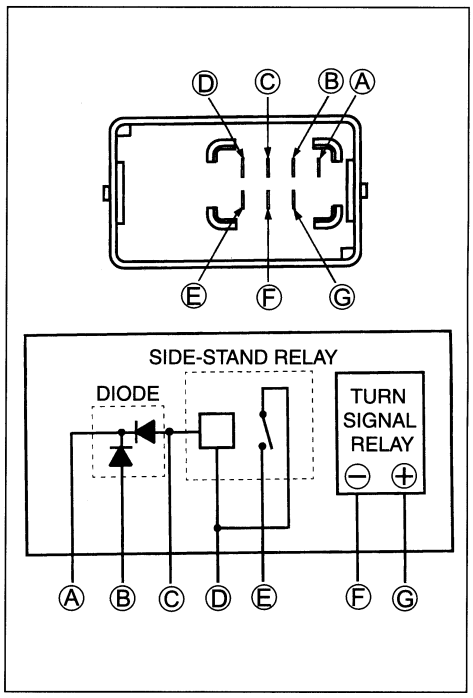

LAMPS

HEADLIGHT

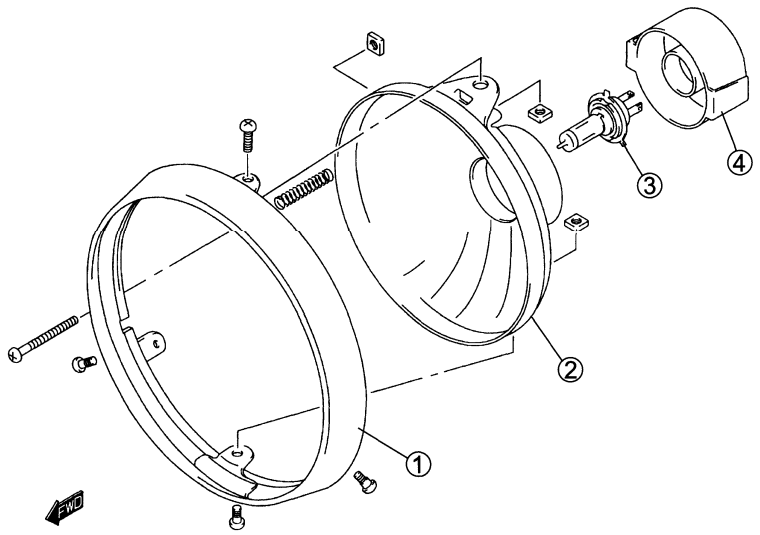

① Rim
② Reflector
③ Bulb (60/50 W)
④ Socket cover

BULB REPLACEMENT

- Remove the headlight with two screws.

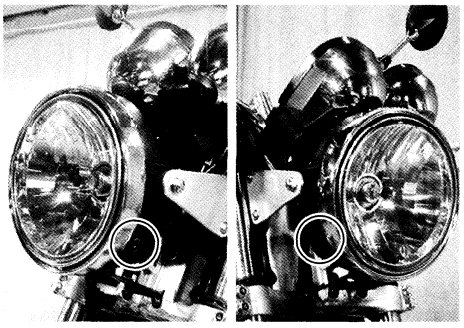

- Disconnect the socket ①.

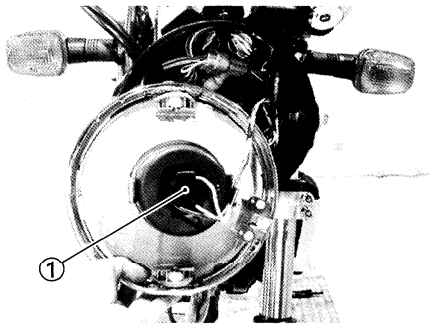

- Remove the socket cover.

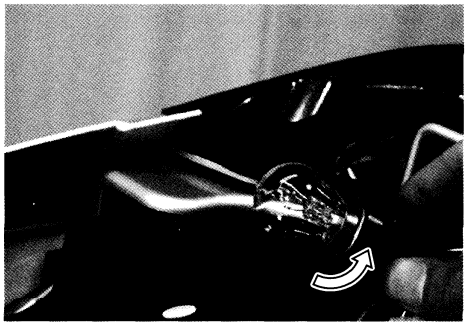

- Unhook the bulb holder spring ①, and pull out the bulb ②.

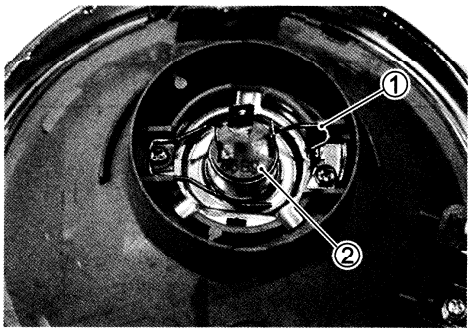

⚠ CAUTION

If you touch the bulb with your bare hands, clean the bulb with a cloth moistened with alcohol or soapy water to prevent premature bulb failure.

- Reassemble the bulb in the reverse order of removal.

BRAKE LIGHT/TAILLIGHT

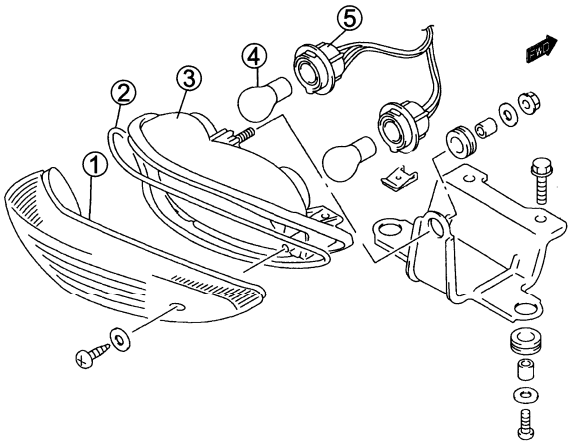

① Lens
② O-ring
③ Taillight housing
④ Bulb
⑤ Socket

Brake light/Taillight bulb ④: 12V 21/5 W

⚠ CAUTION

If you touch the bulb with your bare hands, clean the bulb with a cloth moistened with alcohol or soapy water to prevent premature bulb failure.

TURN SIGNAL LIGHTS

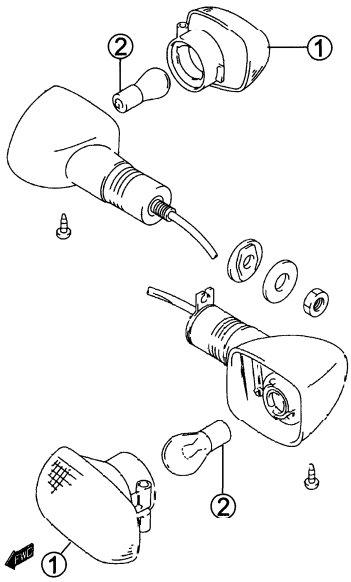

① Lens
② Bulb

Front turn signal light bulb ②: 12 V 21 W

Rear turn signal light bulb ③: 12 V 21 W

⚠ CAUTION

Do not overtighten the lens fitting screws.
If you touch the bulb with your bare hands, clean the bulb with a cloth moistened with alcohol or soapy water to prevent premature bulb failure.

SWITCHES

Inspect each switch for continuity with a tester.
If any abnormality is found, replace the respective switch assemblies with new ones.

IGNITION SWITCH
(For Australia)

Position \ Color	R	O	O/R	B/W
OFF				
ON	○——	——○	○——	——○

(For Others)

Position \ Color	R	O	O/R	B/W	Gr	Br
OFF						
ON	○——	——○	○——	——○	○——	——○
P	○——	——	——	——	——	——○

LIGHTING SWITCH
(Except for Australia, Canada and U.S.A.)

Position \ Color	O/Bl	Gr	O/R	Y/W
OFF				
•	○——	——○		
ON	○——	——○	○——	——○

DIMMER SWITCH

Position \ Color	Y/W	W	Y
HI	○——	——	——○
LO	○——	——○	

TURN SIGNAL SWITCH

Position \ Color	Lg	Lbl	B
L		○——	——○
PUSH			
R	○——	——○	

PASSING LIGHT SWITCH
(Except for Canada and U.S.A.)

Position \ Color	O/R	Y
•		
PUSH	○——	——○

ENGINE STOP SWITCH

Position \ Color	O/B	O/W
OFF		
RUN	○——	——○

STARTER BUTTON

Position \ Color	O/W	Y/G
•		
PUSH	○——	——○

HORN BUTTON

Position \ Color	B/Bl	B/W
•		
PUSH	○——	——○

FRONT BRAKE SWITCH

Position \ Color	B	B/R
OFF		
ON	○——	——○

REAR BRAKE LIGHT SWITCH

Position \ Color	O	W/B
OFF		
ON	○——	——○

CLUTCH LEVER POSITION SWITCH

Position \ Color	B/Y	B/Y
OFF		
ON	○——	——○

OIL PRESSURE SWITCH

Position \ Color	B	Ground
ON (engine is stopped)	○——	——○
OFF (engine is running)		

NOTE:
Before inspecting the oil pressure switch, check if the engine oil level is enough. (☞ 2-6)

WIRE COLOR

B : Black
Br : Brown
Gr : Gray
Lbl : Light blue
Lg : Light green
O : Orange
R : Red
Y : Yellow
W : White
B/Bl : Black with Blue tracer
B/W : Black with White tracer
B/Y : Black with Yellow tracer
B/R : Black with Red tracer
G/Y : Green with Yellow tracer
O/B : Orange with Black tracer
O/Bl : Orange with Blue tracer
O/R : Orange with Red tracer
O/W : Orange with White tracer
O/Y : Orange with Yellow tracer
W/B : White with Black tracer
Y/G : Yellow with Green tracer
Y/W : Yellow with White tracer

IGNITION SWITCH REMOVAL

- Remove the headlight. (☞ 6-23)

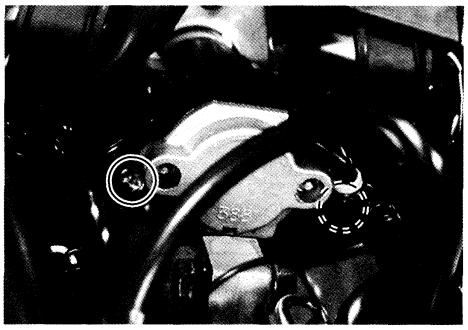

- Remove the ignition coil by using special tool.

TOOL 09930-11920: Torx bit
09930-11940: Bit holder

- Reinstall the ignition switch in the reverse order of removal.

- The torx bolts are precoat bolts therefore when installing the used bolts, apply a small quantity of THREAD LOCK "1342" to their threads.

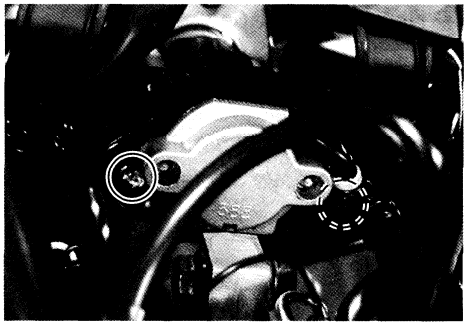

BATTERY

SPECIFICATIONS

Type designation	YT12A-BS
Capacity	12V, 36.0 kC (10 Ah)/10HR
Standard electrolyte S.G.	1.320 at 20°C (68°F)

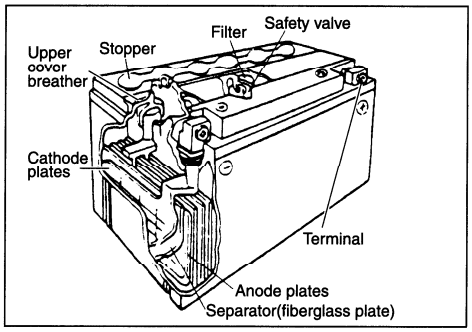

INITIAL CHARGING

Filling electrolyte

- Remove the aluminum tape ① sealing the battery electrolyte filler holes.

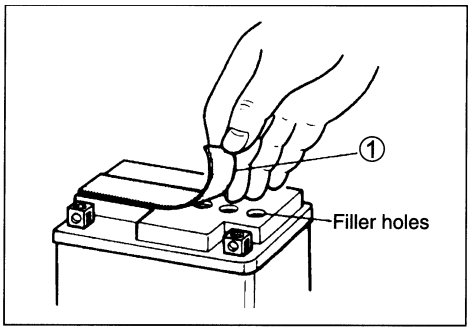

- Remove the caps ②.

NOTE:

** After filling the electrolyte completely, use the removed cap ② as the sealed caps of battery-filler holes.*

** Do not remove or pierce the sealed areas ③ of the electrolyte container.*

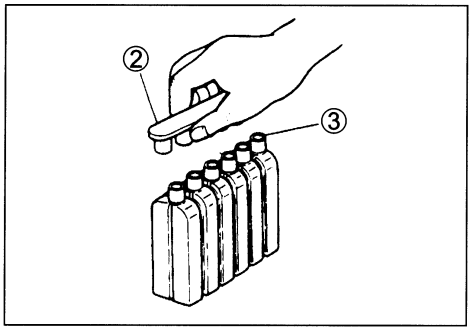

- Insert the nozzles of the electrolyte container into the battery's electrolyte filler holes, holding the container firmly so that it does not fall. Take precaution not to allow any of the fluid to spill.

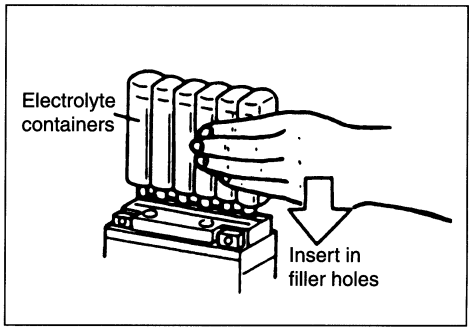

- Make sure air bubbles are coming up each electrolyte container, and leave in this position for about more than 20 minutes.

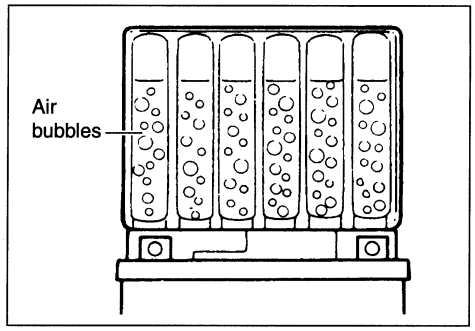

NOTE:
If no air bubbles are coming up from a filler port, tap the bottom of the two or three times.
Never remove the container from the battery.

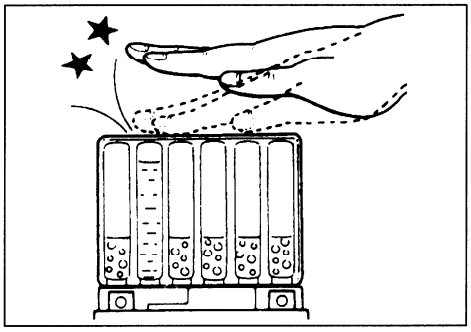

- After confirming that the electrolyte has entered the battery completely, remove the electrolyte containers from the battery. Wait for around 20 minutes.
- Insert the caps into the filler holes, pressing in firmly so that the top of the caps do not protrude above the upper surface of the battery's top cover.

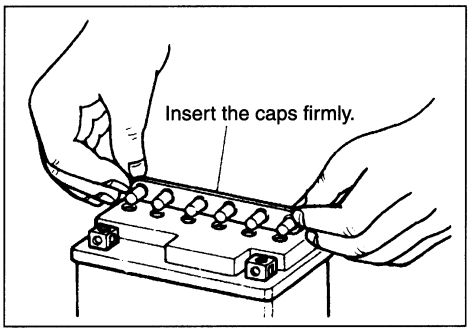

▲ CAUTION

- **Never use anything except the specified battery.**
- **Once install the caps to the battery; do not remove the caps.**

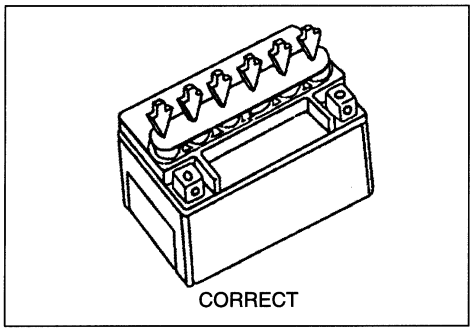

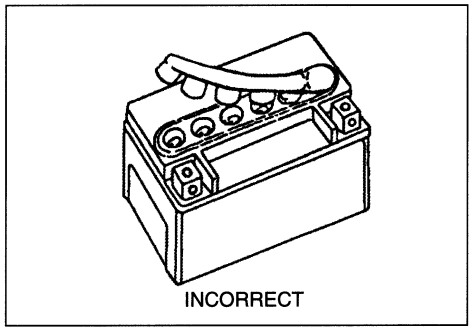

- Using multi circuit tester, measure the battery voltage. The tester should indicate more than 12.5 – 12.6V (DC) as shown in the Fig. If the battery voltage is lower than the specification, charge the battery with a battery charger. (Refer to the recharging operation.)

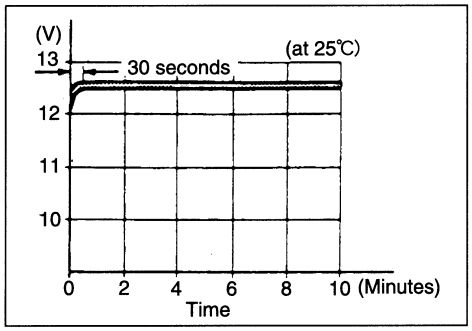

NOTE:
Initial charging for a new battery is recommended if two years have elapsed since the date of manufacture.

SERVICING

Visually inspect the surface of the battery container. If any signs of cracking or electrolyte leakage from the sides of the battery have occurred, replace the battery with a new one. If the battery terminals are found to be coated with rust or an acidic white powdery substance, then this can be cleaned away with sandpaper.

RECHARGING OPERATION

- Using the multi circuit tester, check the battery voltage. If the voltage reading is less than the 12.0V (DC), recharge the battery with a battery charger.

⚠ CAUTION

When recharging the battery, remove the battery from the motorcycle.

NOTE:
Do not remove the caps on the battery top while recharging.

Recharging time: 5 A for one hour or 1.2 A for 5 to 10 hours

⚠ CAUTION

Be careful not to permit the charging current to exceed 7 A at any time.

- After recharging, wait for more than 30 minutes and check the battery voltage with a multi circuit tester.
- If the battery voltage is less than the 12.5V, recharge the battery again.
- If battery voltage is still less than 12.5V, after recharging, replace the battery with a new one.
- When the motorcycle is not used for a long period, check the battery every 1 month to prevent the battery discharge.

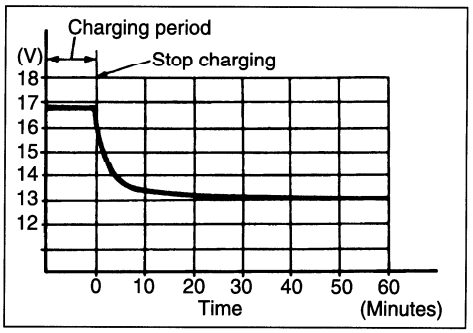

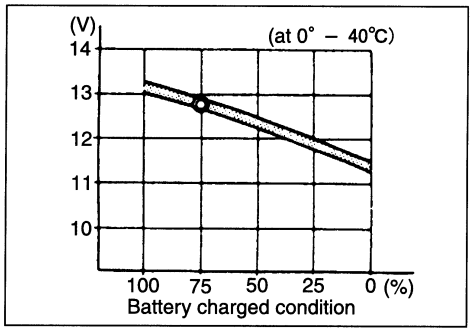

SERVICING INFORMATION

CONTENTS

TROUBLESHOOTING 8- 2
ENGINE 8- 2
RADIATOR 8- 5
CARBURETOR 8- 5
CHASSIS 8- 6
BRAKES 8- 7
ELECTRICAL 8- 8
BATTERY 8- 9
WIRING DIAGRAM 8-10
WIRE HARNESS, CABLE AND HOSE ROUTING 8-13
WIRE HARNESS ROUTING 8-13
WIRING HARNESS ROUTING 8-14
SPEED SENSOR LEAD WIRE ROUTING 8-15
CABLE ROUTING 8-16
FUEL SYSTEM HOSE ROUTING 8-17
COOLING SYSTEM HOSE ROUTING 8-19
FRONT BRAKE HOSE ROUTING 8-20
REAR BRAKE HOSE ROUTING 8-21
PAIR (AIR SUPPLY) SYSTEM HOSE ROUTING 8-22
FUEL TANK SET-UP 8-23
SPECIAL TOOLS 8-24
TIGHTENING TORQUE 8-27
ENGINE 8-27
CHASSIS 8-28
TIGHTENING TORQUE CHART 8-30
SERVICE DATA 8-31

TROUBLESHOOTING

ENGINE

Complaint	Symptom and possible causes	Remedy
Engine will not start, or is hard to start.	**Compression too low**	
	1. Out of adjustment tappet clearance.	Adjust.
	2. Worn valve guides or poor seating of valves.	Repair or replace.
	3. Mistiming valves.	Adjust.
	4. Excessively worn piston rings.	Replace.
	5. Worn-down cylinder bore.	Replace or rebore.
	6. Too slowly starter motor cranks.	See electrical section.
	7. Poor seating of spark plug.	Retighten.
	Plugs not sparking	
	1. Fouled spark plug.	Clean.
	2. Wet spark plug.	Clean and dry.
	3. Defective ignition coil.	Replace.
	4. Open or short in high-tension cord.	Replace.
	5. Defective signal generator or ignitor unit.	Replace.
	No fuel reaching the carburetors	
	1. Clogged fuel tank air breather hose.	Clean or replace.
	2. Clogged or defective vacuum fuel valve.	Clean or replace.
	3. Defective fuel pump.	Replace.
	4. Defective carburetor needle valve.	Replace.
	5. Clogged fuel hose or fuel filter.	Clean or replace.
Engine stalls easily.	1. Fouled spark plugs.	Clean.
	2. Defective signal generator or ignitor unit.	Replace.
	3. Clogged fuel hose.	Clean.
	4. Clogged jets in carburetor.	Clean.
	5. Out of adjustment tappet clearance.	Adjust.
Noisy engine.	**Excessive valve chatter**	
	1. Too large valve clearance.	Adjust.
	2. Weakened or broken valve springs.	Replace.
	3. Worn tappet or cam surface.	Replace.
	4. Worn and burnt camshaft journal.	Replace.
	Noise seems to come from piston	
	1. Worn down piston or cylinders.	Replace.
	2. Fouled with carbon combustion chambers.	Clean.
	3. Worn piston pins or piston pin bore.	Replace.
	4. Worn piston rings or ring grooves.	Replace.
	Noise seems to come from timing chain	
	1. Stretched chain.	Replace.
	2. Worn sprockets.	Replace.
	3. Not working tension adjuster.	Repair or replace.
	Noise seems to come from clutch	
	1. Worn splines of countershaft or hub.	Replace.
	2. Worn teeth of clutch plates.	Replace.
	3. Distorted clutch plates, driven and drive.	Replace.
	4. Worn clutch release bearing.	Replace.
	5. Weakened clutch dampers.	Replace the primary driven gear.

Complaint	Symptom and possible causes	Remedy
Noisy engine.	**Noise seems to come from crankshaft**	
	1. Due to wear rattling bearings.	Replace.
	2. Worn and burnt big-end bearings.	Replace.
	3. Worn and burnt journal bearings.	Replace.
	4. Too large thrust clearance.	Replace thrust bearing.
	Noise seems to come from transmission	
	1. Worn or rubbing gears.	Replace.
	2. Badly worn splines.	Replace.
	3. Worn or rubbing primary gears.	Replace.
	4. Badly worn bearings.	Replace.
	Noise seems to come from water pump	
	1. Too much play on pump shaft bearing.	Replace.
	2. Worn or damaged mechanical seal.	Replace.
	3. Touches pump case and impeller.	Replace.
Slipping clutch.	1. Out of adjustment or loss of play clutch control.	Adjust.
	2. Weakened clutch springs.	Replace.
	3. Worn or distorted pressure plate.	Replace.
	4. Distorted clutch plates, driven and drive.	Replace.
Dragging clutch.	1. Out of adjustment or loss of play clutch control.	Adjust.
	2. Clutch springs weakened.	Replace.
	3. Distorted pressure plate or clutch plate.	Replace.
Transmission will not shift.	1. Broken gearshift cam.	Replace.
	2. Distorted gearshift forks.	Replace.
	3. Worn gearshift cam plate.	Replace.
Transmission will not shift back.	1. Broken return spring on shift shaft.	Replace.
	2. Rubbing or sticky shift shaft.	Repair or replace.
	3. Distorted or worn gearshift forks.	Replace.
Transmission jumps out of gear.	1. Worn shifting gears on driveshaft or countershaft.	Replace.
	2. Distorted or worn gearshift forks.	Replace.
	3. Weakened stopper spring on gearshift stopper.	Replace.
	4. Worn gearshift cam plate.	Replace.
Engine idles poorly.	1. Out of adjustment tappet clearance.	Adjust.
	2. Poor seating of valves.	Replace or repair.
	3. Defective valve guides.	Replace.
	4. Worn tappet or cam surface.	Replace.
	5. Too wide spark plug gaps.	Adjust or replace.
	6. Defective ignition coil.	Replace.
	7. Defective signal generator or ignitor unit.	Replace.
	8. Out of adjustment in carburetor float-chamber fuel level.	Adjust.
	9. Clogged jets or imbalance of carburetors.	Clean or adjust.
	10. Defective fuel pump.	Replace

Complaint	Symptom and possible causes	Remedy
Engine runs poorly in high speed range.	1. Weakened valve springs.	Replace.
	2. Worn camshafts.	Replace.
	3. Valve timing out of adjustment.	Adjust.
	4. Too narrow spark plug gaps.	Adjust.
	5. Ignition not advanced sufficiently due to poorly working timing advance circuit.	Replace ignitor unit.
	6. Defective ignition coil.	Replace.
	7. Defective signal generator or igntior unit.	Replace.
	8. Too low float-chamber fuel level.	Adjust.
	9. Clogged air cleaner element.	Clean.
	10. Clogged fuel hose, resulting in inadequate fuel supply to carburetors.	Clean and prime.
	11. Defective fuel pump.	Replace.
Dirty or heavy exhaust smoke.	1. Too much engine oil in the engine.	Check with inspection window drain out excess oil.
	2. Worn piston rings or cylinders.	Replace.
	3. Worn valve guides.	Replace.
	4. Scored or scuffed cylinder walls.	Rebore.
	5. Worn valves or stems.	Replace.
	6. Defective stem seal.	Replace.
	7. Worn oil ring side rails.	Replace.
Engine lacks power.	1. Loss of tappet clearance.	Adjust.
	2. Weakened valve springs.	Replace.
	3. Out of adjustment valve timing.	Adjust.
	4. Worn piston rings or cylinders.	Replace.
	5. Poor seating of valves.	Repair.
	6. Fouled spark plug.	Clean or replace.
	7. Incorrect spark plug.	Adjust or replace.
	8. Clogged jets in carburetors.	Clean.
	9. Out of adjustment float-chamber fuel level.	Adjust.
	10. Clogged air cleaner element.	Clean.
	11. Loose carburetor balancing screw..	Retighten.
	12. Sucking air from intake pipe.	Retighten or replace.
	13. Too much engine oil.	Drain out excess oil.
	14. Defective fuel pump.	Replace.
Engine overheats.	1. Heavy carbon deposit on piston crowns.	Clean.
	2. Not enough oil in the engine.	Add oil.
	3. Defective oil pump or clogged oil circuit.	Replace or clean.
	4. Too low in float chambers fuel level.	Adjust.
	5. Sucking air from intake pipes.	Retighten or replace.
	6. Use incorrect engine oil.	Change.
	7. Defective cooling system.	See radiator section.

RADIATOR

Complaint	Symptom and possible causes	Remedy
Engine overheats.	1. Not enough cooling water. 2. Clogged with dirt or tradhes radiator core. 3. Erratic thermostat, stuck in closed position. 4. Faulty cooling fan. 5. Defective thermo-switch. 6. Clogged water passage. 7. Air trapped in the cooling circuit. 8. Defective water pump. 9. Use incorrect coolant.	Add coolant. Clean. Replace. Repair or replace. Replace. Clean. Bleed out air. Replace. Replace.
Engine overcools.	1. Erratic thermostat, stuck in full-open position. 2. Defective thermo-switch. 3. Extremely cold weather.	Replace. Replace. Put on the radiator cover.

CARBURETOR

Complaint	Symptom and possible causes	Remedy
Trouble with starting.	1. Clogged starter jet. 2. Clogged starter pipe. 3. Air leaking from a joint between starter body and carburetor. 4. Air leaking from carburetor's joint or vacuum hose joint. 5. Not operation properly starter plunger.	Clean. Clean. Check starter body and carburetor for tighteness, adjust and replace gasket. Check and adjust. Check and adjust.
Idling or low-speed trouble.	1. Clogged or loose pilot jet, pilot air jet. 2. Air leaking from carburetor's joint, bacuum hose joint, or starter. 3. Clogged pilot outlet or bypass. 4. Not fully closed starter plunger.	Check and clean. Check and adjust. Check and clean. Check and adjust.
Medium-or high speed trouble.	1. Clogged main jet or main air jet. 2. Clogged needle jet. 3. Not operating properly throttle valve. 4. Clogged fuel filter.	Check and clean. Check and clean. Check throttle valve for operation. Check and clean.
Overflow and fuel level fluctuations.	1. Worn or damaged needle valve. 2. Broken spring in needle valve. 3. Not working properly float. 4. Foreign matter has adhered to needle valve. 5. Too high or low fuel level. 6. Defective fuel pump.	Replace. Replace. Check and adjust. Clean. Adjust float height. Replace.

CHASSIS

Complaint	Symptom and possible causes	Remedy
Heavy steering.	1. Overtightened steering stem nut. 2. Broken bearing in steering stem. 3. Distorted steering stem. 4. Not enough pressure in tires.	Adjust. Replace. Replace. Adjust.
Wobbly handlebars.	1. Loss of balance between right and left front forks. 2. Distorted front fork. 3. Distorted front axle or crooked tire. 4. Worn bearing/race in steering stem.	Replace. Repair or replace. Replace. Replace.
Wobby front wheel.	1. Distorted wheel rim. 2. Worn front wheel bearing. 3. Defective or incorrect tire. 4. Loose axle, axle nut or axle pinch bolts. 5. Incorrect front fork oil level.	Replace. Replace. Replace. Retighten. Adjust.
Front suspension too soft.	1. Weakened springs. 2. Not enough fork oil. 3. Wrong weight tank oil.	Replace. Replenish. Replace.
Front suspension too stiff.	1. Too viscous fork oil. 2. Too much fork oil. 3. Bent front axle.	Replace. Drain excess oil. Replace.
Noisy front suspension.	1. Not enough fork oil. 2. Loose bolts on suspension.	Replenish. Retighten.
Wobbly rear wheel.	1. Distorted wheel rim. 2. Worn rear wheel bearing or swingarm bearings. 3. Defective or incorrect tire. 4. Worn swingarm and rear cushion related bearings. 5. Loose nuts or bolts on rear suspensions.	Replace. Replace. Replace. Replace. Retighten.
Rear suspension too soft.	1. Weakened shock absorber spring. 2. Improperly set rear suspension adjuster. 3. Leakage oil of shock absorber. 4. Leakage gas of shock absorber.	Replace. Adjust. Replace. Replace.
Rear suspension too stiff.	1. Improperly set rear suspension adjuster. 2. Bent shock absorber shaft. 3. Bent swingarm. 4. Worn swingarm and rear cushion related bearings.	Adjust. Replace. Replace. Replace.
Noisy rear suspension.	1. Loose nuts or bolts on rear suspension. 2. Worn swingarm and rear cushion related bearings.	Retighten. Replace.

BRAKES

Complaint	Symptom and possible causes	Remedy
Insufficient brake power.	1. Leakage of brake fluid from hydraulic system. 2. Worn pads. 3. Oil adhesion of engaging surface of pads. 4. Worn disc. 5. Air in hydraulic system.	Repair or replace. Replace. Clean disc and pads. Replace. Bleed air.
Brake squeaking.	1. Carbon adhesion on pad surface. 2. Tilted pad. 3. Damaged wheel bearing. 4. Loosen front-wheel axle or rear-wheel axle. 5. Worn pads. 6. Foreign material in brake fluid. 7. Clogged return port of master cylinder.	Repair surface with sandpaper. Modify pad fitting or replace. Replace. Tighten to specified torque. Replace. Replace brake fluid. Disassemble and clean master cylinder.
Excessive brake lever stroke.	1. Air in hydraulic system. 2. Insufficient brake fluid. 3. Improper quality of brake fluid.	Bleed air. Replenish fluid to specified level; bleed air. Replace with correct fluid.
Leakage of brake fluid	1. Insufficient tightening of connection joints. 2. Cracked hose. 3. Worn piston and/or cup.	Tighten to specified torque. Replace. Replace piston and/or cup.
Brake drags.	1. Rusty part. 2. Insufficient brake lever or brake pedal pivot lubrication.	Clean and lubricate. Lubricate.

ELECTRICAL

Complaint	Symptom and possible causes	Remedy
No sparking or poor sparking.	1. Defective ignition coil. 2. Defective spark plugs. 3. Defective signal generator or ignitor unit.	Replace. Replace. Replace.
Spark plug soon become fouled with carbon.	1. Mixture too rich. 2. Idling speed set too high. 3. Incorrect gasoline. 4. Dirty element in air cleaner. 5. Too cold spark plug.	Adjust carburetors. Adjust carburetors. Change. Clean. Replace with hot type plugs.
Spark plugs become fouled too soon.	1. Worn piston rings. 2. Worn piston or cylinders. 3. Excessive clearance of valve stem in valve guides. 4. Worn stem oil seal.	Replace. Replace. Replace. Replace.
Spark plug electrodes overheat or burn.	1. Too hot spark plugs. 2. Overheated the engine. 3. Loose spark plugs. 4. Too lean mixture.	Replace with cold type plugs. Tune up. Retighten. Adjust carburetors.
Generator does not charge.	1. Open or short lead wires, or loose lead connections. 2. Shorted, grounded or open generator coils. 3. Shorted or punctured regulator/rectifiers.	Repair or replace or retighten. Replace. Replace.
Generator does charge, but charging rate is below the specification.	1. Lead wires tend to get shorted or open-circuited or loosely connected at terminals. 2. Grounded or open-circuited stator coils or generator. 3. Defective regulator/rectifier. 4. Defective cell plates in the battery.	Repair or retighten. Replace. Replace. Replace the battery.
Generator overcharges.	1. Internal short-circuit in the battery. 2. Damaged or defective resistor element in the regulator/rectifier. 3. Poorly grounded regulator/rectifier.	Replace the battery. Replace. Clean and tighten ground connection.
Unstable charging.	1. Lead wire insulation frayed due to vibration, resulting in intermittent shorting. 2. Internally shorted generator. 3. Defective regulator/rectifier.	Repair or replace. Replace. Replace.
Starter button is not effective.	1. Run down battery. 2. Defective switch contacts. 3. Not seating properly brushes on commutator in starter motor. 4. Defective starter relay/starter interlock switch.	Repair or replace. Replace. Repair or replace. Replace.

BATTERY

Complaint	Symptom and possible causes	Remedy
"Sulfation", acidic white powdery substance or spots on surface of cell plates.	1. Cracked battery case. 2. Battery has been left in a run-down condition for a long time.	Replace the battery. Replace the battery.
Battery runs down quickly.	1. Not correct the charging system. 2. Cell plates have lost much of their active material as a result of overcharging. 3. A short-circuit condition exists within the battery. 4. Too low battery voltage. 5. Too old battery.	Check the generator, regulator/rectifier and circuit connections and make necessary adjustments to obtain specified charging operation. Replace the battery, and correct the charging system. Replace the battery. Recharge the battery fully. Replace the battery.
Battery "sulfation".	1. Too low or too high charging rate. (When not in use batteries should be checked at least once a month to avoid sulfation.) 2. Left unused the battery for too long in cold climate.	Replace the battery. Replace the battery, if badly sulfated.
Battery discharges too rapidly.	Dirty container top and sides.	Clean.

WIRING DIAGRAM

(FOR U.S.A. AND CANADA MODELS)

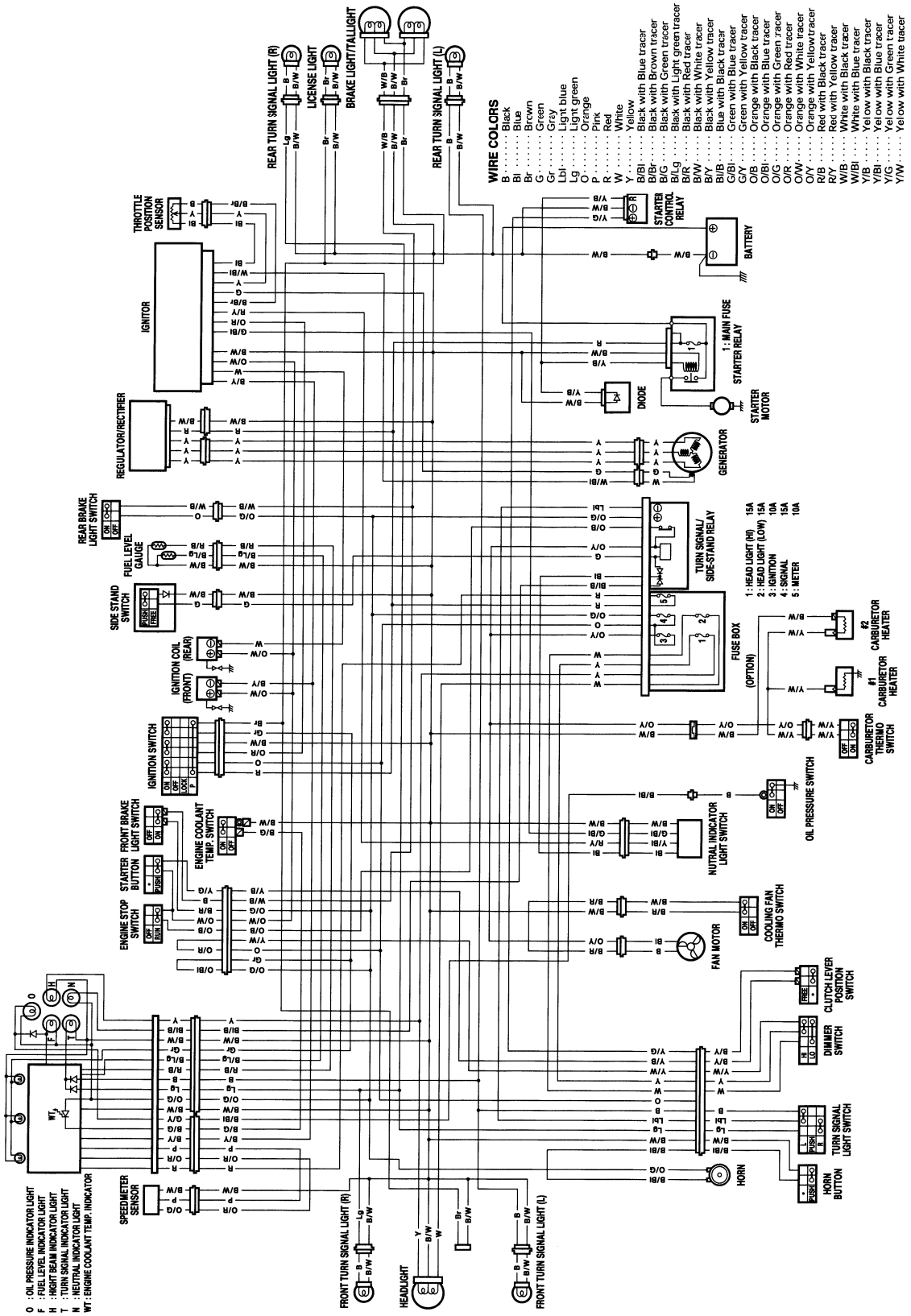

(FOR E-24 MODEL)

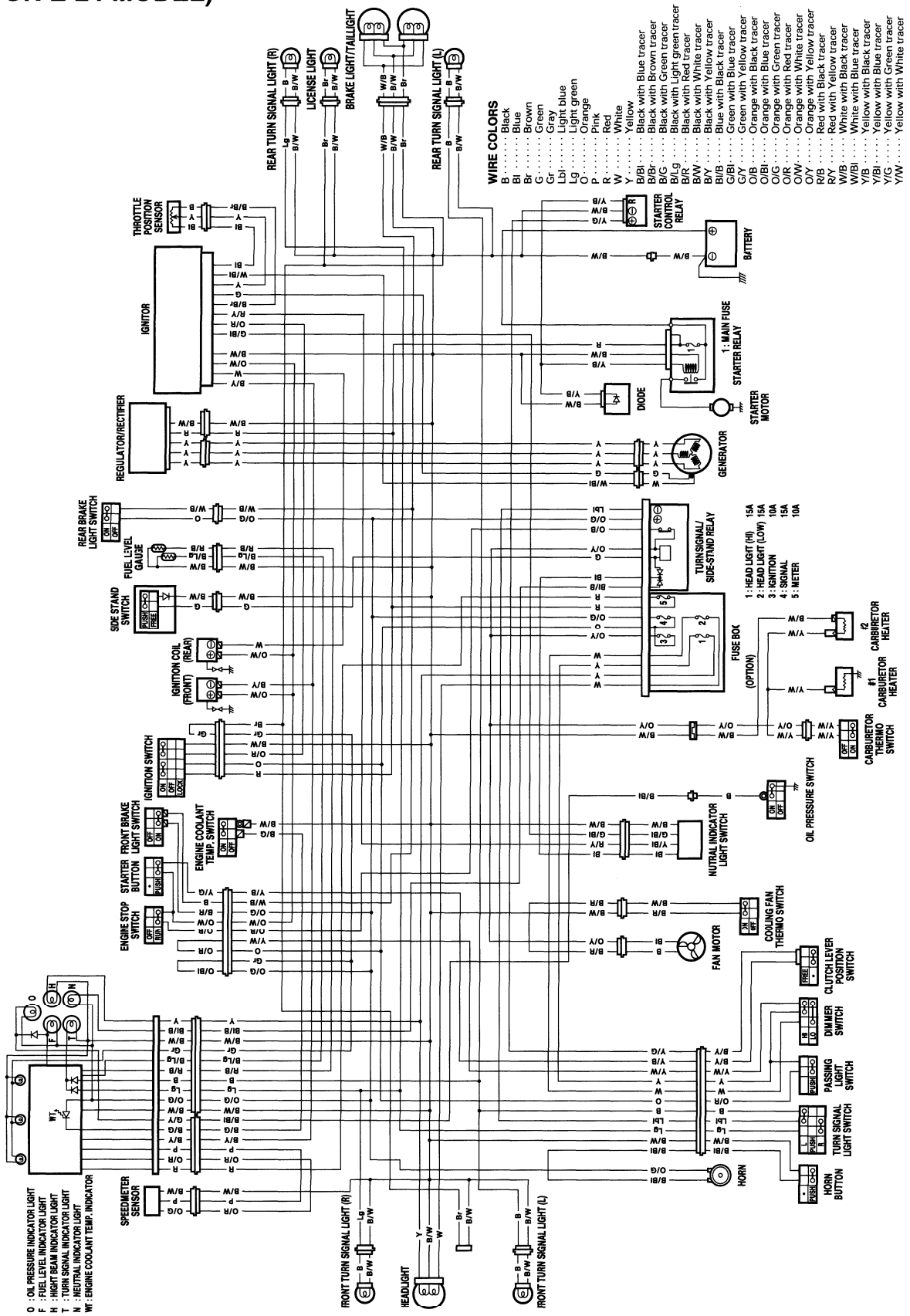

(FOR E-02, 04, 17, 18, 22, 25 AND 34 MODELS)

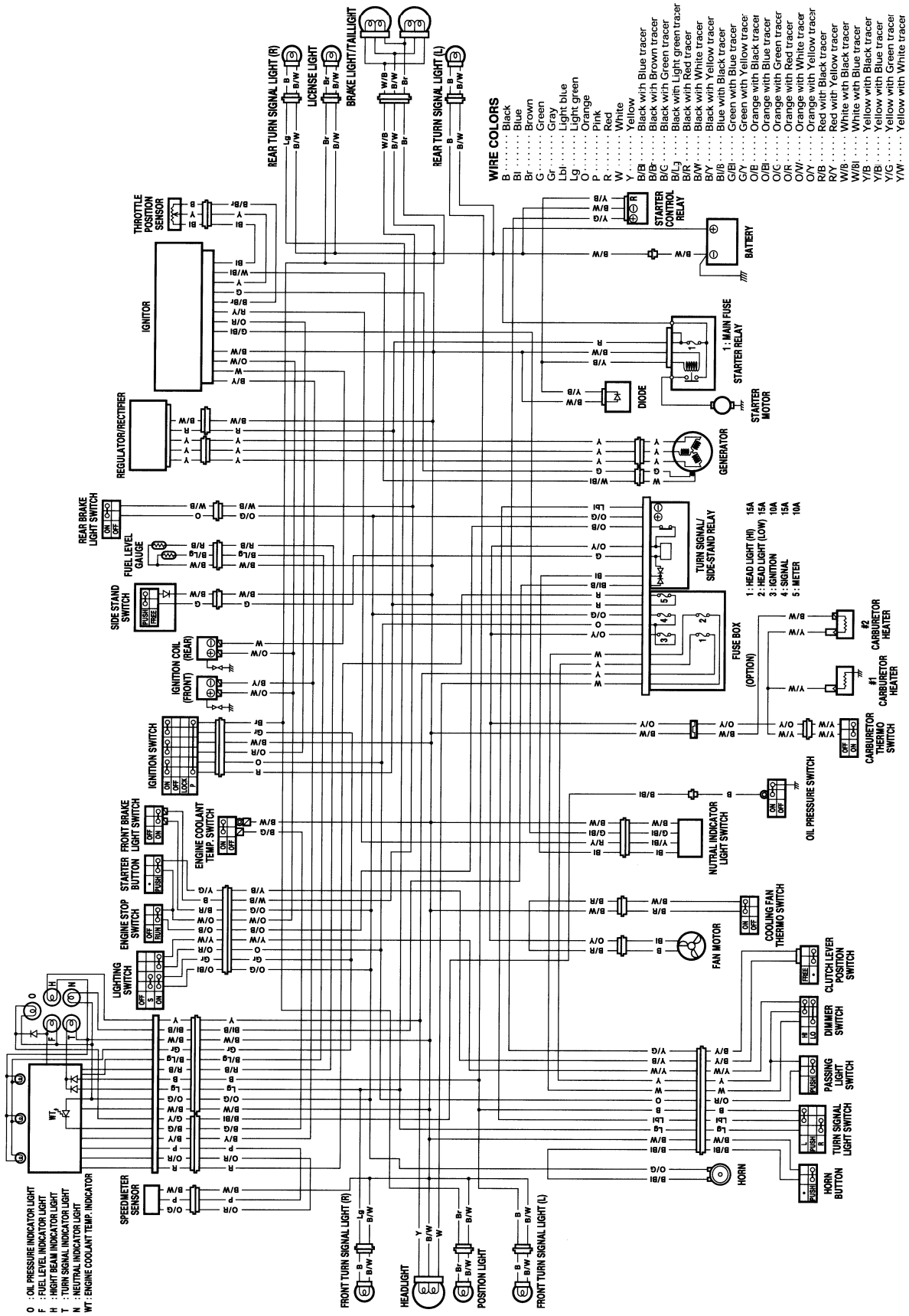

WIRING HARNESS, CABLE AND HOSE ROUTING

WIRE HARNESS ROUTING

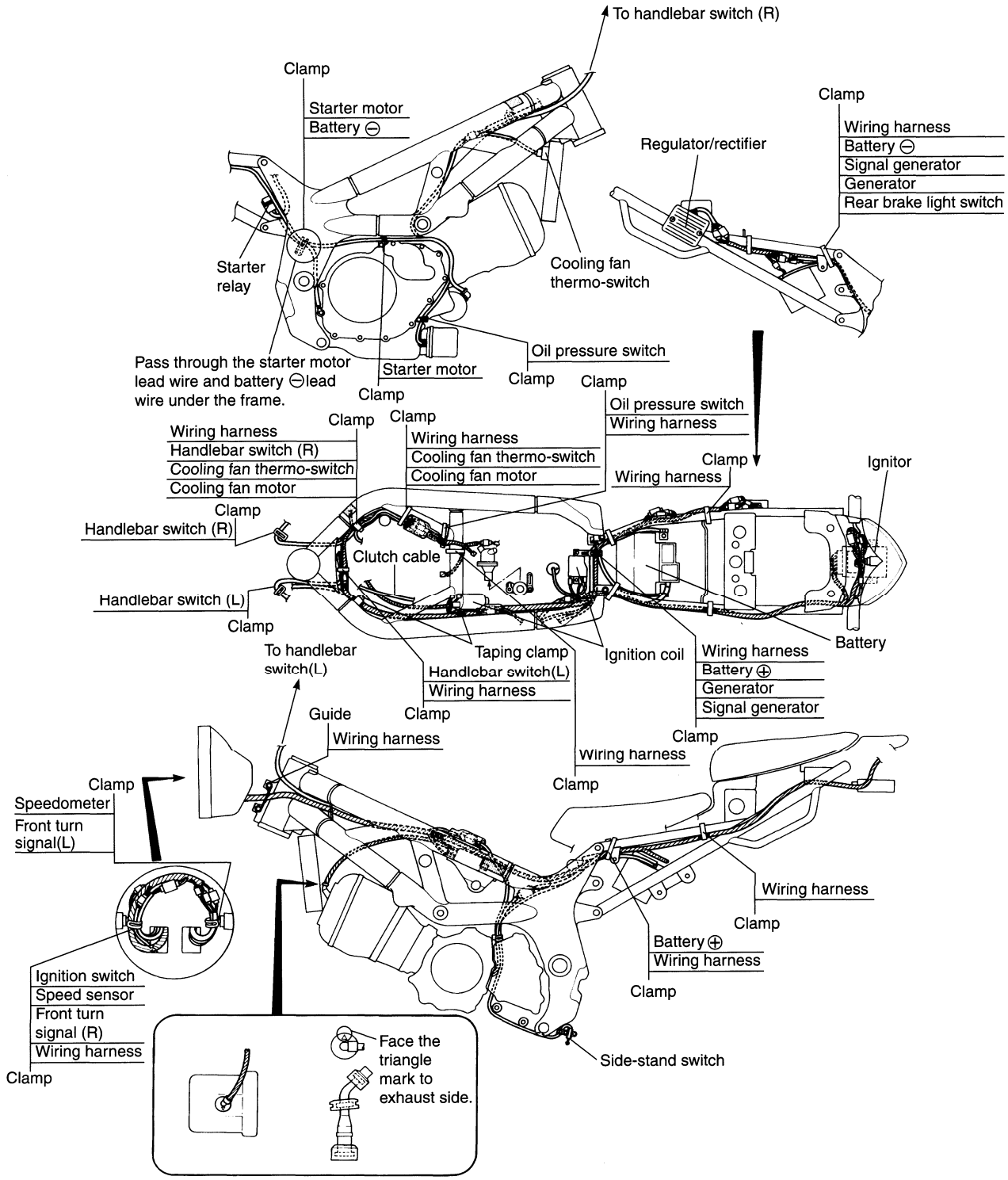

WIRE HARNESS ROUTING

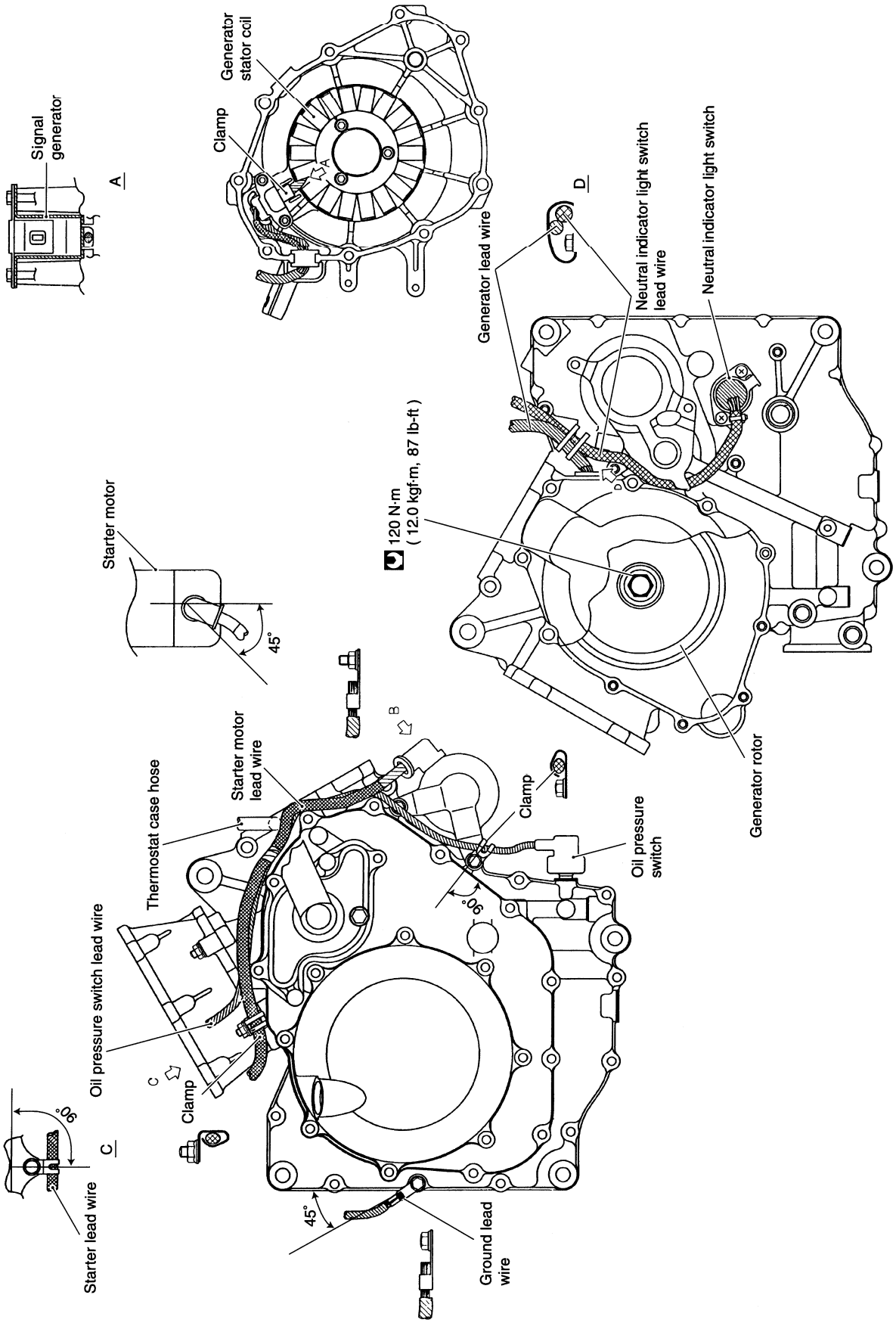

SPEED SENSOR LEAD WIRE ROUTING

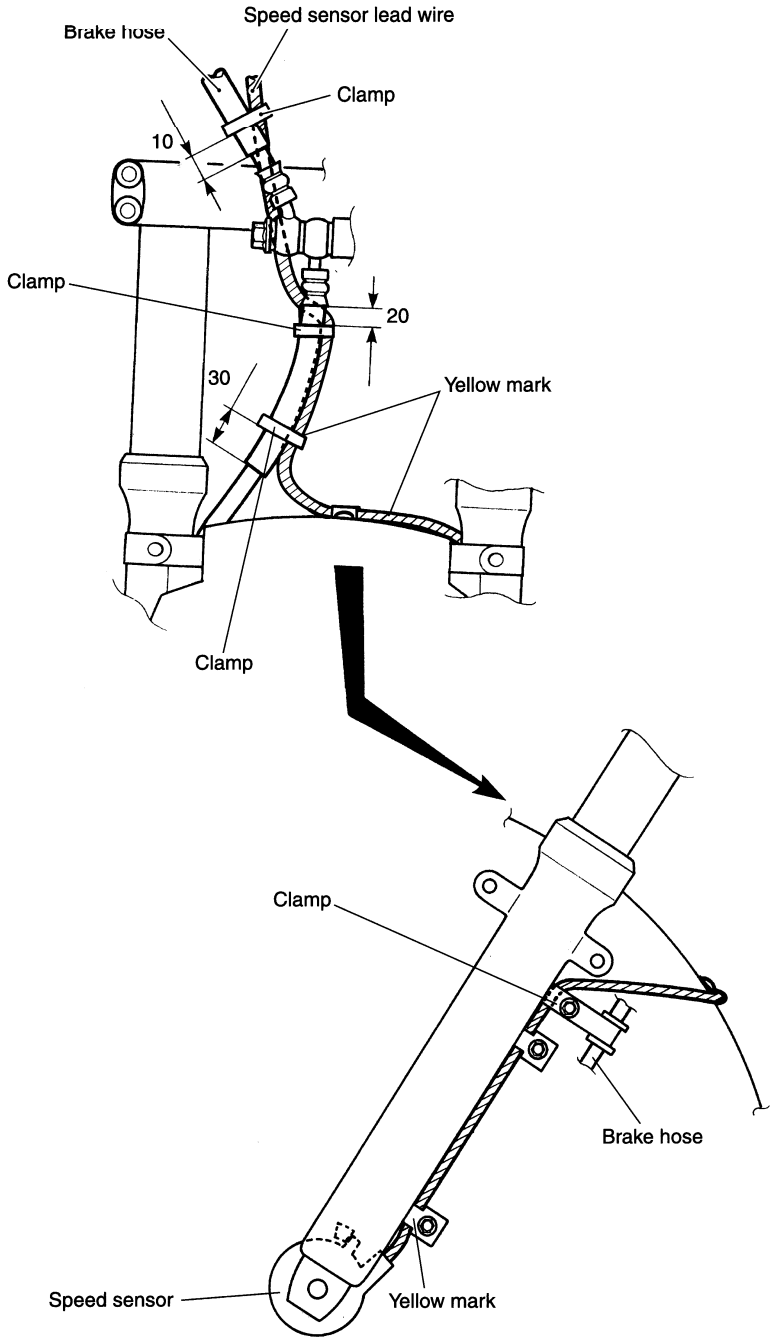

CABLE ROUTING

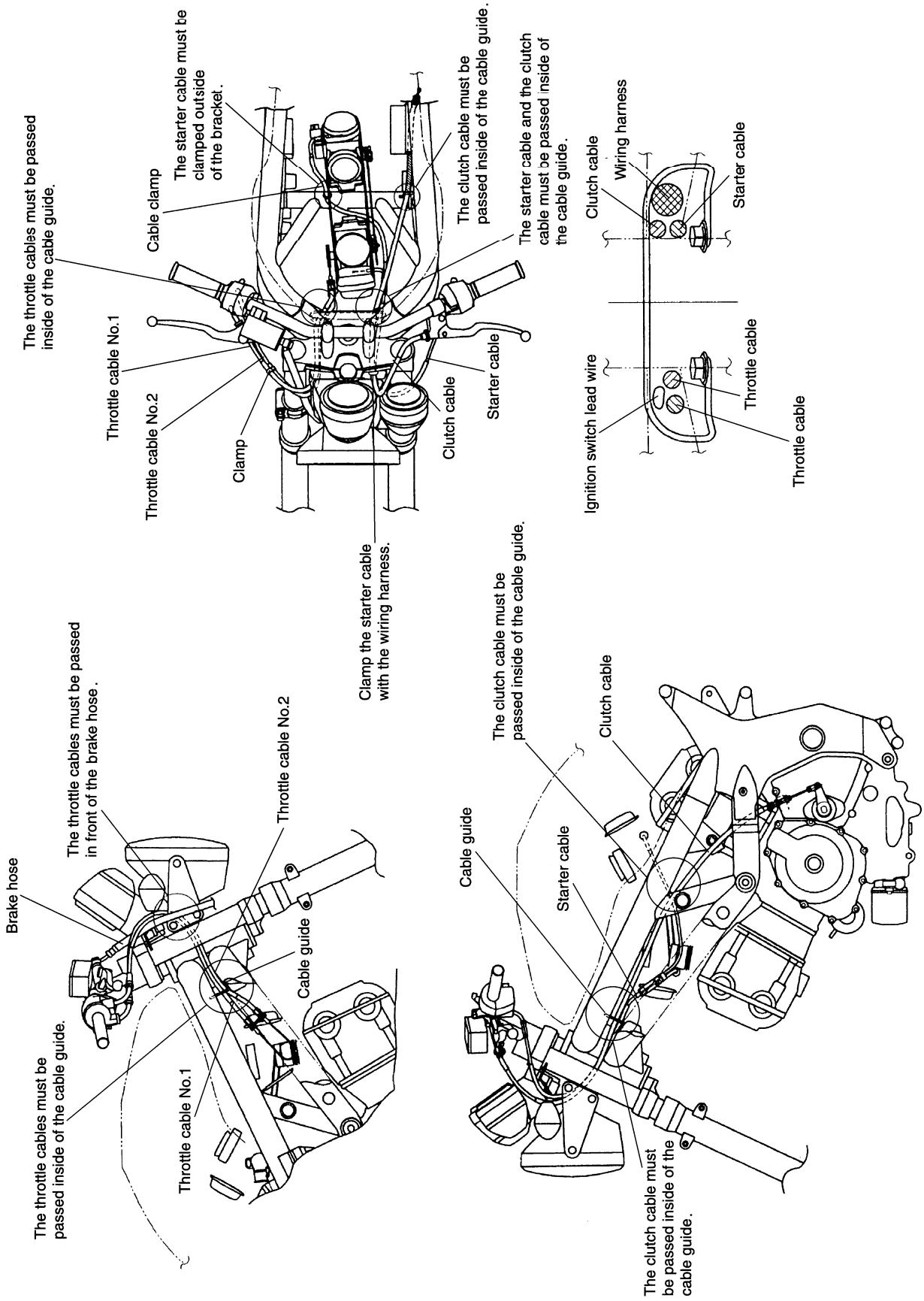

FUEL SYSTEM HOSE ROUTING

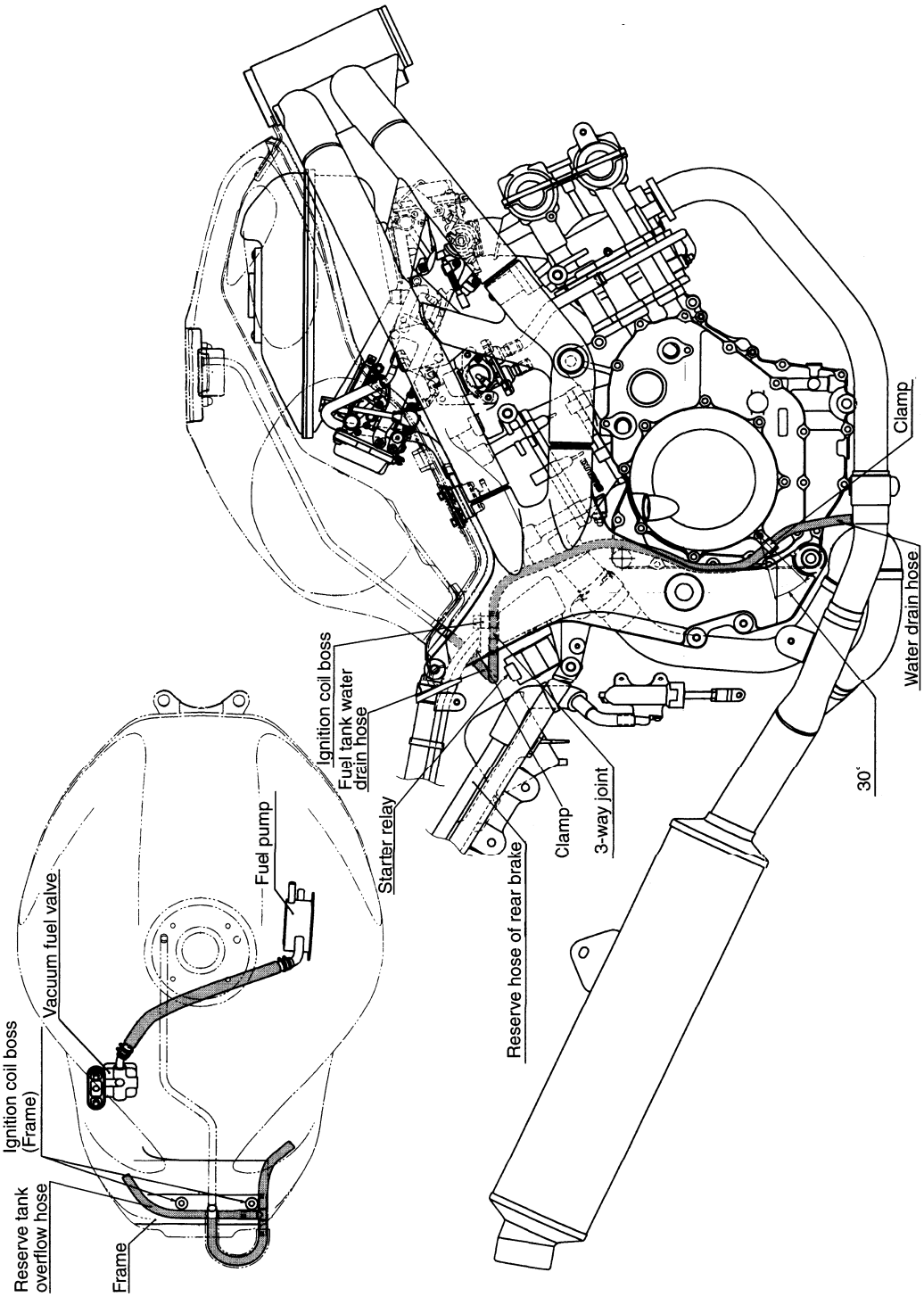

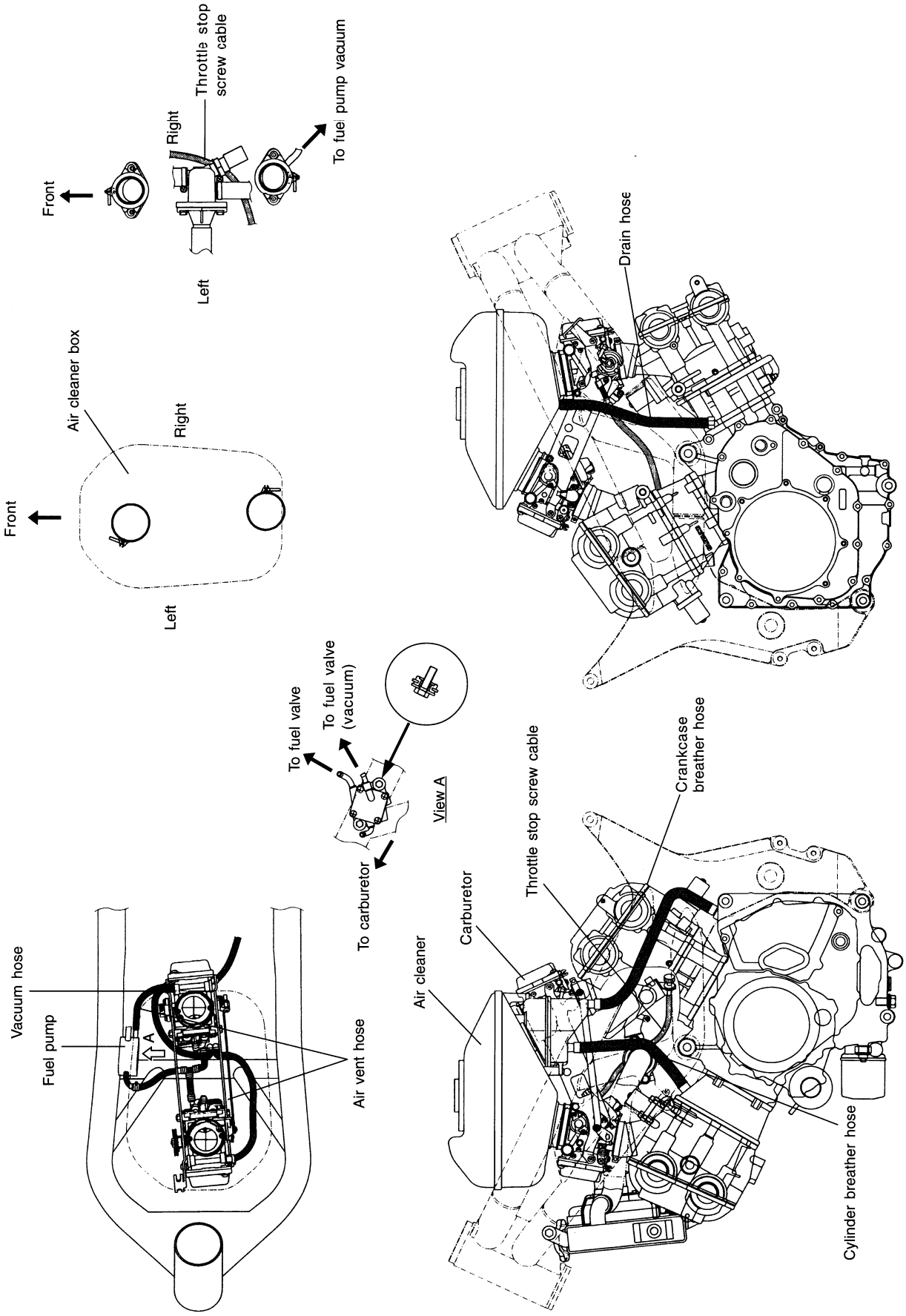
Front
Right
Throttle stop screw cable
To fuel pump vacuum
Left
Air cleaner box
Front
Right
Left
Drain hose
To fuel valve
To fuel valve (vacuum)
View A
To carburetor
Vacuum hose
Fuel pump
A
Air vent hose
Air cleaner
Carburetor
Throttle stop screw cable
Crankcase breather hose
Cylinder breather hose

COOLING SYSTEM HOSE ROUTING

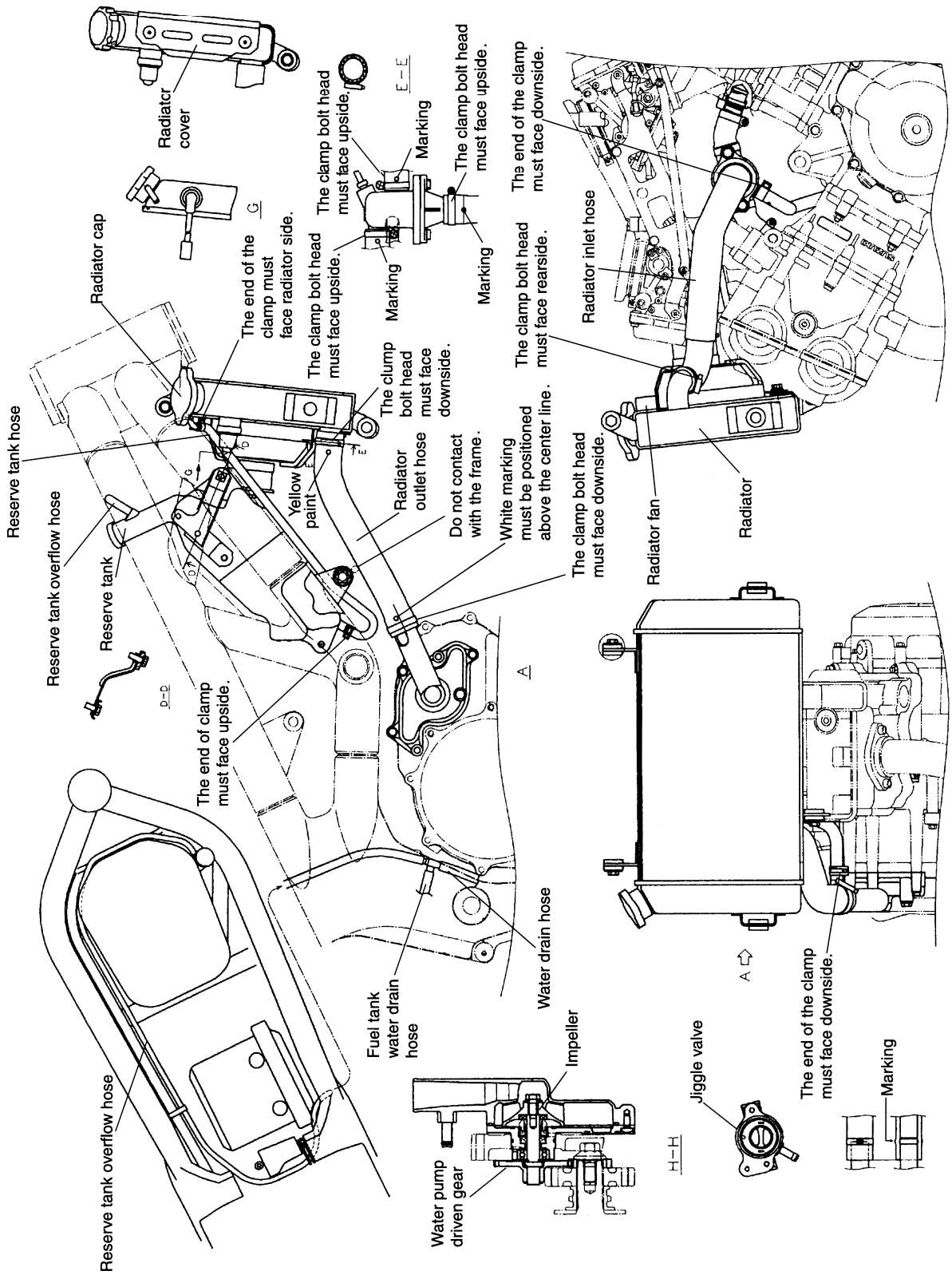

FRONT BRAKE HOSE ROUTING

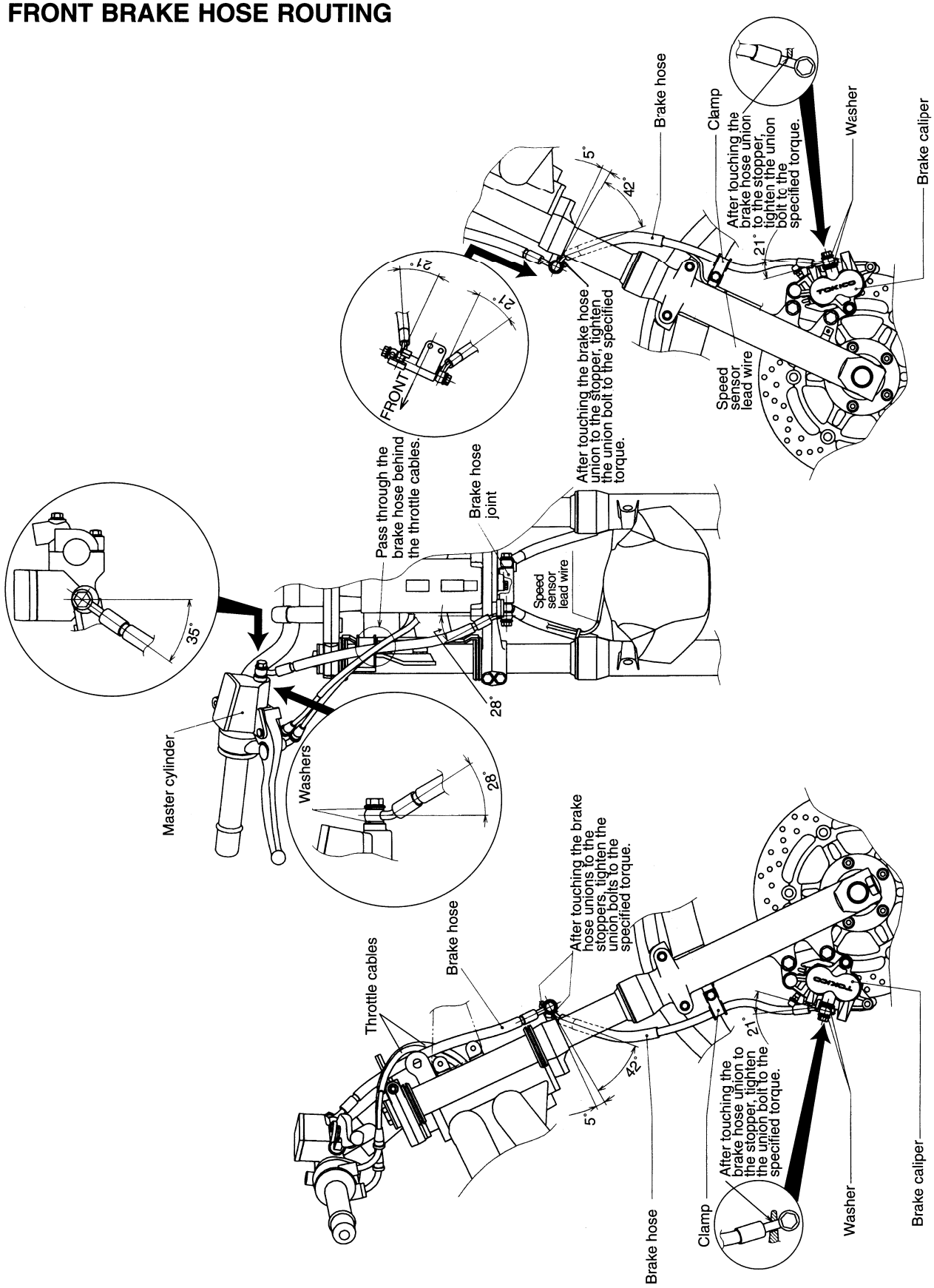

REAR BRAKE HOSE ROUTING

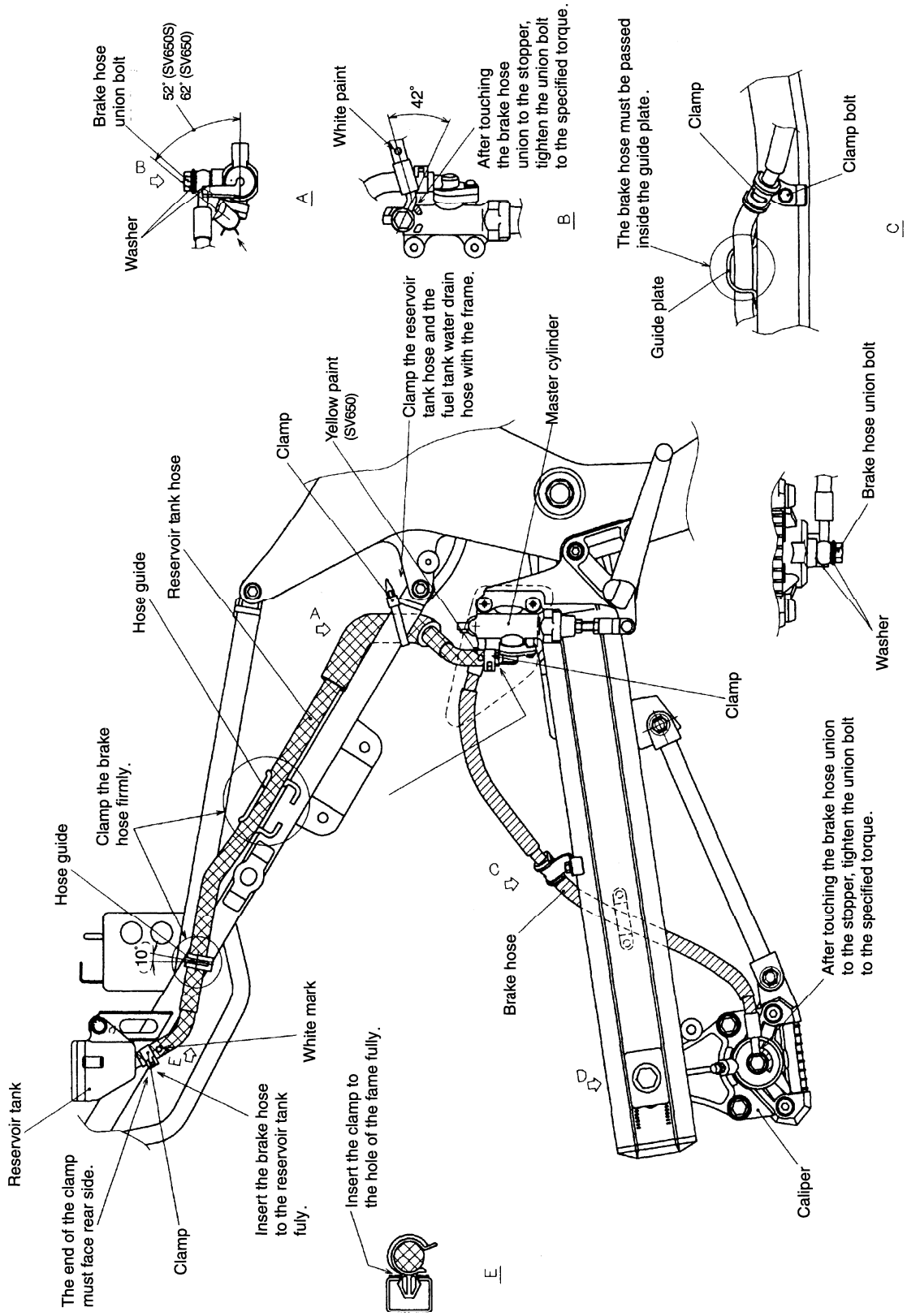

PAIR (AIR SUPPLY) SYSTEM HOSE ROUTING (FOR CALIFORNIA)

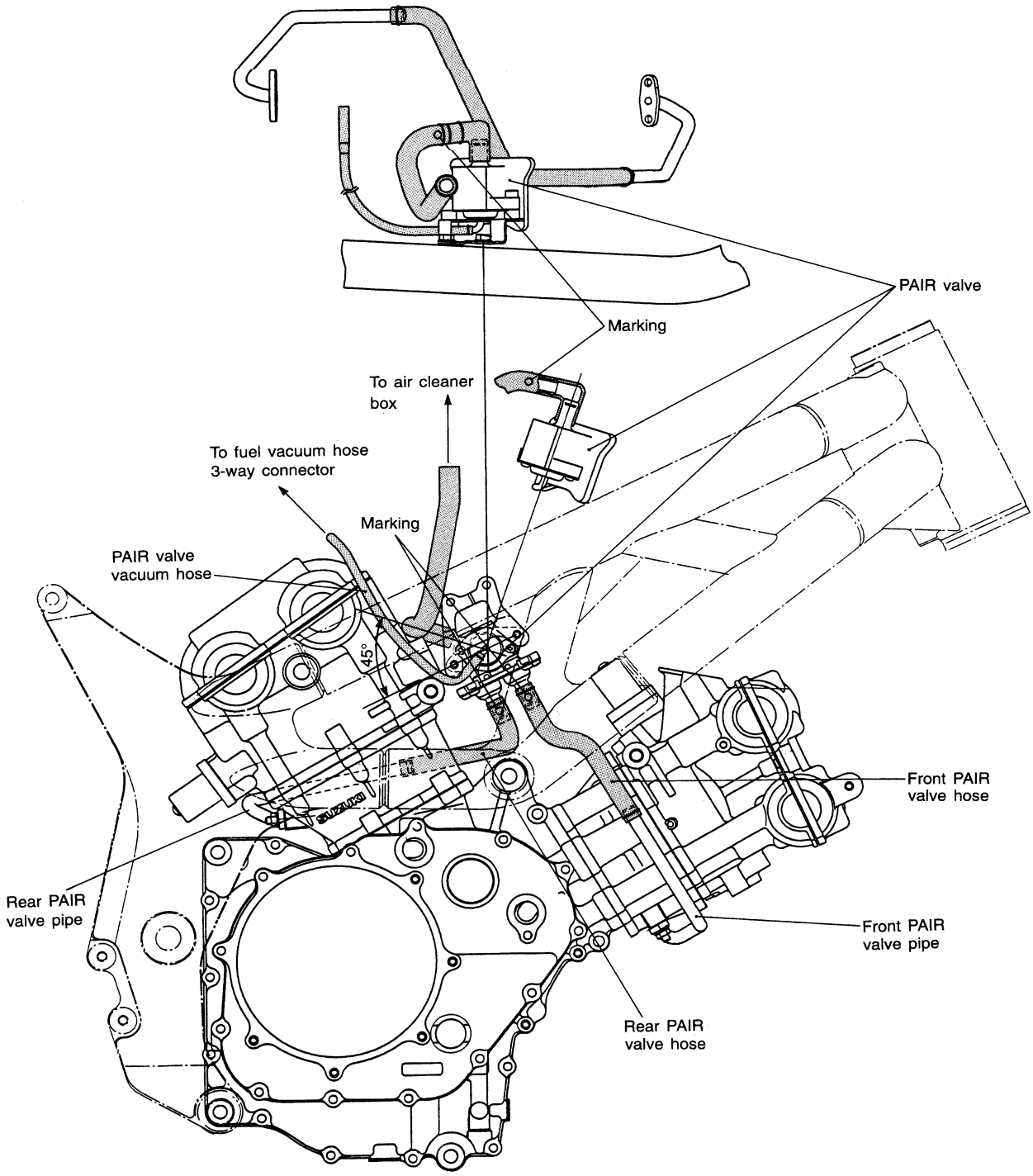

FUEL TANK SET-UP

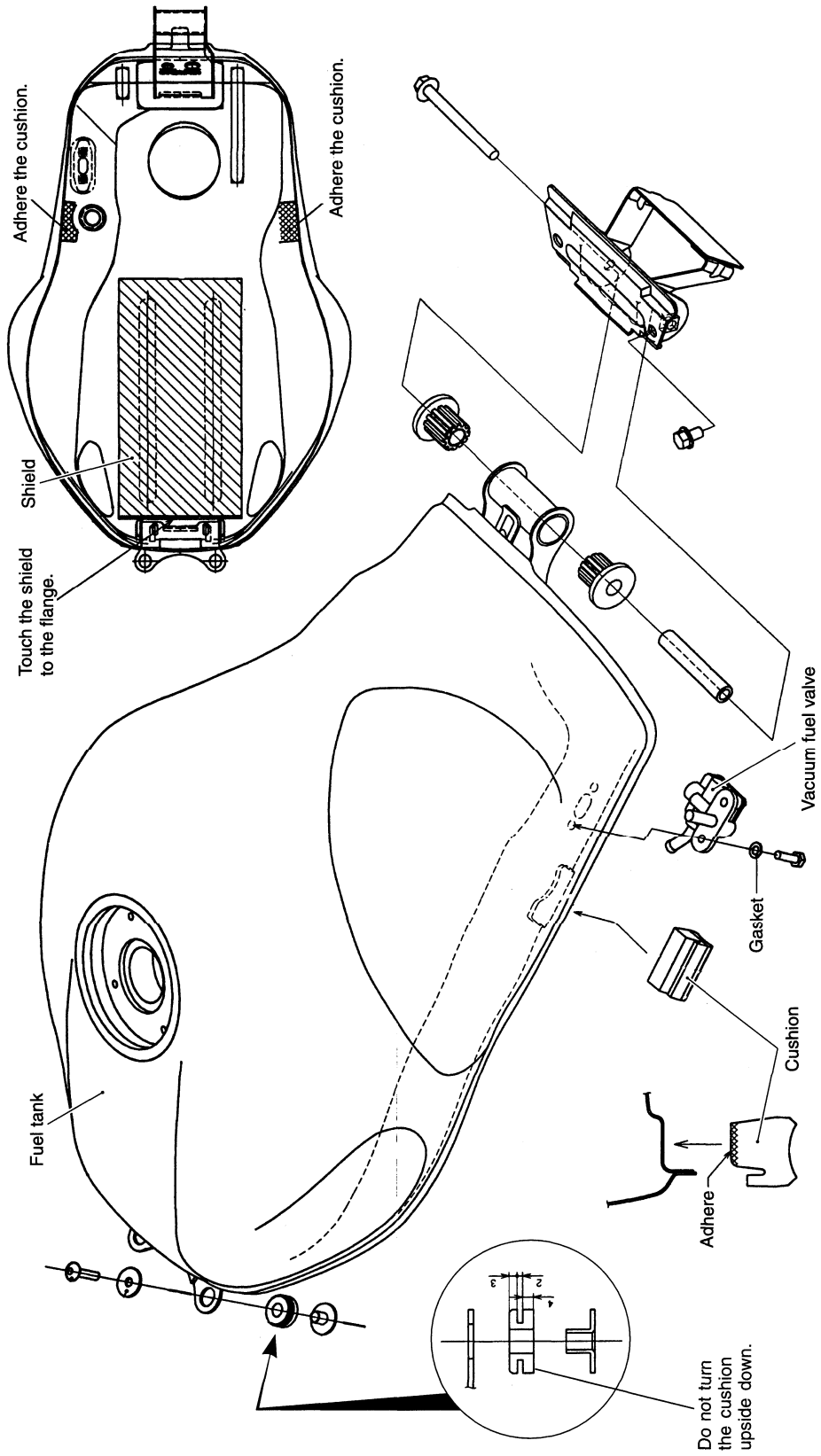

SPECIAL TOOLS

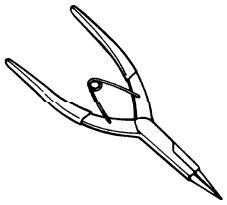 09900-06104 Snap ring pliers	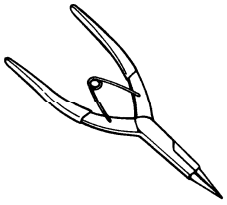 09900-06107 Snap ring pliers	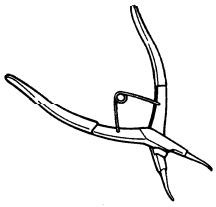 09900-06108 Snap ring pliers	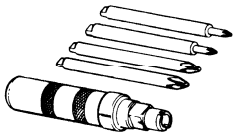 09900-09004 Impact driver set	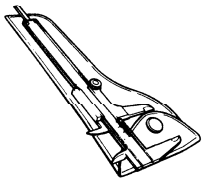 09900-20101 or 09900-20102 Vernier calipers
09900-20202 Micrometer (25 – 50 mm)	09900-20204 Micrometer (75 – 100 mm)	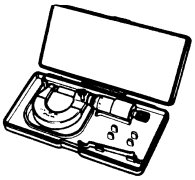 09900-20205 Micrometer (0 – 25 mm)	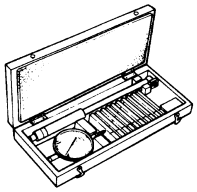 09900-20508 Cylinder gauge set	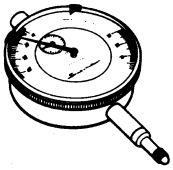 09900-20602 Dial gauge (1/1000 mm, 1 mm)
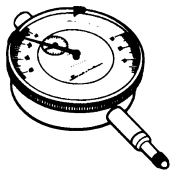 09900-20606 Dial gauge (1/100 mm, 10 mm)	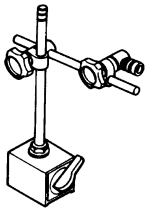 09900-20701 Magnetic stand	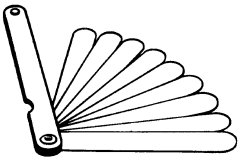 09900-20803 09900-20806 Thickness gauge	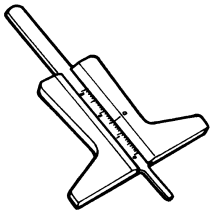 09900-20805 Tire depth gauge	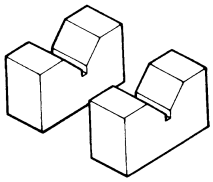 09900-21304 V-block (100 mm)
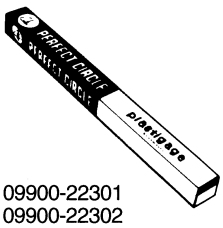 09900-22301 09900-22302 Plastigauge	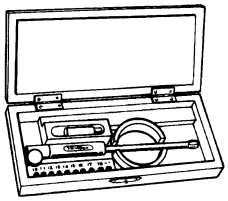 09900-22403 Small bore gauge (18 – 35 mm)	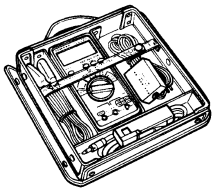 09900-25008 Multi circuit tester set	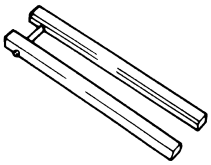 09910-20116 Conrod holder	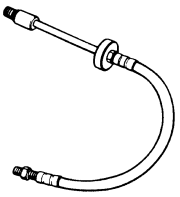 09915-63310 Compression gauge adapter
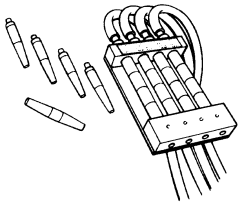 09913-13121 Carburetor balancer set	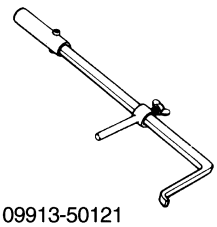 09913-50121 Oil seal remover	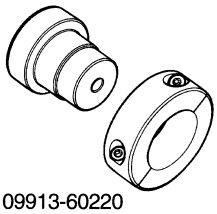 09913-60220 Journal bearing remover/installer	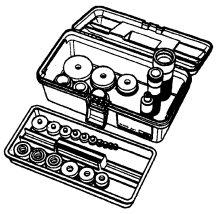 09913-70210 Bearing installer set	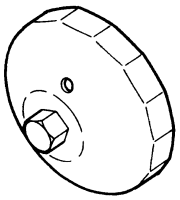 09915-40610 Oil filter wrench

09915-64510 Compression gauge	09915-74520 Oil pressure gauge hose	09915-74532 Oil pressure gauge adaptor	09915-77330 Meter (for high pressure)	09916-10911 Valve lapper set
09916-14510 Valve spring compressor	09916-14521 Valve spring compressor attachment	09916-21111 Valve seat cutter set	09916-20640 Solid pilot (N-100-4.5)	09916-20630 Valve seat cutter head (N-126)
09916-34542 Reamer handle	09916-33210 Valve guide reamer (4.5 mm)	09916-34580 Valve guide reamer (10.8 mm)	09916-43210 Valve guide remover/installer	09916-53330 Attachment
09916-84511 Tweezers	09917-47010 Vacuum pump gauge set	09917-62430 Cam chain tension adjuster locking tool	09920-13120 Crankcase separating tool	09920-53740 Clutch sleeve hub holder
09921-20220 Bearing remover set	09923-80210 Oil seal guide	09924-84510 Bearing installer set	09924-84521 Bearing installer set	09930-11920 Torx bit JT40H

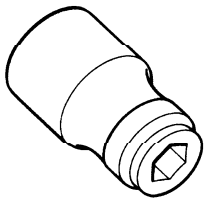 09930-11940 Bit holder	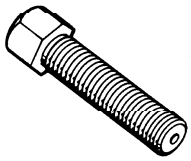 09930-30450 Rotor remover	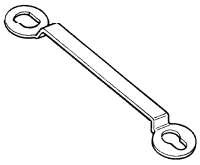 09930-44530 Rotor holder	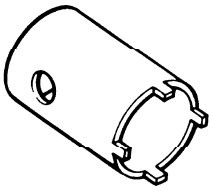 09940-14911 Steering stem nut wrench	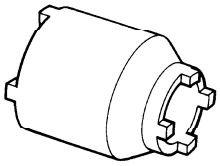 09940-14940 Swingarm adjuster lock nut wrench
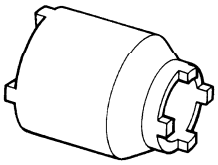 09940-14990 Engine mounting thrust adjuster socket wrench	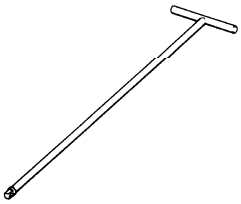 09940-34520 T handle	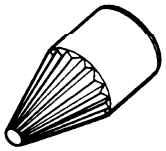 09940-34531 Attachment A	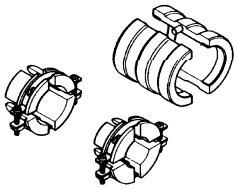 09940-52861 Front fork oil seal installer set	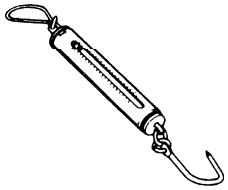 09940-92720 Spring scale
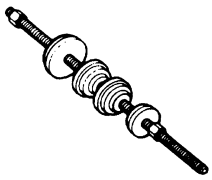 09941-34513 Bearing/steering race installer set	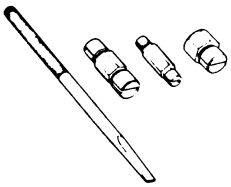 09941-50111 Wheel bearing remover	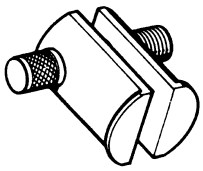 09941-54911 Bearing outer race remover	09941-74911 Steering bearing installer	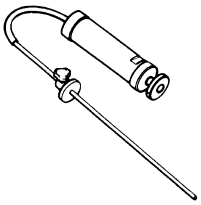 09943-74111 Fork oil level gauge
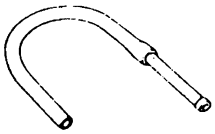 09913-10760 Fuel level gauge				

NOTE:
When order the special tool, please confirm whether it is available or not.

TIGHTENING TORQUE

ENGINE

ITEM		N·m	kgf·m	lb-ft
Cylinder head cover bolt		14	1.4	10.0
Spark plug		11	1.1	8.0
Camshaft journal holder bolt		10	1.0	7.0
Cam chain tension adjuster bolt		8	0.8	6.0
Cam chain tension adjuster mounting bolt		10	1.0	7.0
Cam chain guide bolt		10	1.0	7.0
Cam chain tensioner mounting bolt		10	1.0	7.0
Cylinder head bolt [M10]	(Initial)	25	2.5	18.0
	(Final)	42	4.2	30.5
Cylinder head bolt [M6]		10	1.0	7.0
Cylinder head side bolt		14	1.4	1.0
Cylinder nut	[M:6]	10	1.0	7.0
Water drain bolt		13	1.3	9.5
Impeller securing bolt		13	1.3	9.5
Clutch sleeve hub nut		50	5.0	36.0
Clutch spring set bolt		5.5	0.55	4.0
Oil plate bolt		10	1.0	7.0
Oil pressure regulator		27	2.7	19.5
Oil strainer plate bolt		10	1.0	7.0
Primary drive gear bolt		70	7.0	50.5
Generator cover plug		11	1.1	8.0
Valve timing inspection plug		23	2.3	16.5
Generator rotor bolt		120	12.0	87.0
Starter clutch bolt		25	2.5	18.0
Generator stator set bolt		10	1.0	7.0
Signal generator set bolt		5.5	0.55	4.0
Gerarshift cam stopper bolt		10	1.0	7.0
Gearshift cam stopper plate bolt		10	1.0	7.0
Gearshift arm stopper bolt		23	2.3	16.5
Oil pressure switch		14	1.4	10.0
Crankcase bolt	[M:6]	11	1.1	8.0
	[M:8]	26	2.6	19.0
Generator cover bolt	[M:6]	10	1.0	7.0
Clutch cover bolt	[M:6]	10	1.0	7.0
Water pump case screw		4.5	0.45	3.3

ITEM		N·m	kgf·m	lb-ft
Oil gallery plug	[M:16]	35	3.5	25.5
	[M:8]	18	1.8	13.0
	[M6]	5.5	0.55	4.0
Oil drain plug		21	2.1	15.0
Piston cooling oil jet bolt		10	1.0	7.0
Oil pump mounting bolt		8	0.8	6.0
Conrod bearing cap bolt	(Initial)	35	3.5	25.5
	(Final)	67	6.7	48.5
Exhaust pipe bolt		23	2.3	16.5
Crankcase bearing retainer screw		8	0.8	6.0
Muffler mounting nut		23	2.3	16.5
Muffler joint nut		23	2.3	16.5
Oil pipe stopper screw		8	0.8	6.0
Engine sprocket nut		145	14.5	105
Engine mounting pinch bolt		23	2.3	16.5
Engine mounting bolt/nut	[M:12]	93	9.3	67.5
	[M:10]	55	5.5	40.0
Engine mounting thrust adjuster	[Center]	10	1.0	7.0
	[Rear Lower]	10	1.0	7.0
Engine mounting thrust adjuster lock nut	[Center]	45	4.5	32.5
	[Rear Lower]	45	4.5	32.5
Cooling fan thermo-switch		13	1.3	9.5
Engine coolant temperature switch		10	1.0	7.0

CHASSIS

ITEM	N·m	kgf·m	lb-ft
Steering stem head nut	65	6.5	47.0
Front fork upper clamp bolt	23	2.3	16.5
Front fork lower clamp bolt	23	2.3	16.5
Front fork cap bolt	23	2.3	16.5
Front fork damper rod bolt	30	3.0	21.5
Front axle	65	6.5	47.0
Front axle pinch bolt	23	2.3	16.5
Handlebar clamp bolt	23	2.3	16.5
Handlebar holder nut	45	4.5	32.5

ITEM	N·m	kgf·m	lb-ft
Front brake master cylinder mounting bolt	10	1.0	7.0
Front brake caliper mounting bolt	39	3.9	28.0
Brake hose union bolt	23	2.3	16.5
Clutch holder mounting bolt	10	1.0	7.0
Air bleeder valve	7.5	0.75	5.5
Brake disc bolt (Front and Rear)	23	2.3	16.5
Rear brake caliper mounting bolt	26	2.6	19.0
Rear brake caliper housing bolt	30	3.0	21.5
Rear brake master cylinder mounting bolt	10	1.0	7.0
Rear brake master cylinder rod lock nut	18	1.8	13.0
Front footrest bracket mounting bolt	23	2.3	16.5
Front footrest bolt	39	3.9	28.0
Swingarm pivot shaft	15	1.5	11.0
Swingarm pivot shaft nut	100	10.0	72.5
Swingarm pivot shaft lock nut	90	9.0	65.0
Torque link nut (Front and Rear)	35	3.5	25.5
Rear shock absorber mounting bolt/nut (Upper & Lower)	50	5.0	36.0
Rear cushion lever/rod mounting nut	78	7.8	56.5
Rear axle nut	65	6.5	47.0
Rear sprocket nut	60	6.0	43.5

TIGHTENING TORQUE CHART

For other bolts and nuts listed previously, refer to this chart:

Bolt Diameter	Conventional or "4" marked bolt			"7" marked bolt		
Ⓐ (mm)	N·m	kgf·m	lb-ft	N·m	kgf·m	lb-ft
4	1.5	0.15	1.0	2.3	0.23	1.5
5	3	0.3	2.0	4.5	0.45	3.0
6	5.5	0.55	4.0	10	1.0	7.0
8	13	1.3	9.5	23	2.3	16.5
10	29	2.9	21.0	50	5.0	36.0
12	45	4.5	32.5	85	8.5	61.5
14	65	6.5	47.0	135	13.5	97.5
16	105	10.5	76.0	210	21.0	152.0
18	160	16.0	115.5	240	24.0	173.5

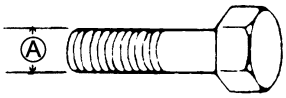

Conventional bolt

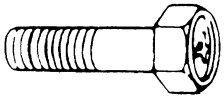

"4" marked bolt

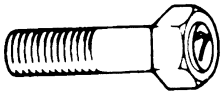

"7" marked bolt

SERVICE DATA

VALVE + GUIDE

Unit: mm (in)

ITEM	STD/SPEC.		LIMIT
Valve diam.	IN.	31 (1.2)	———
	EX.	25.5 (1.0)	———
Valve clearance (When cold)	IN.	0.1 – 0.2 (0.004 – 0.008)	———
	EX.	0.2 – 0.3 (0.008 – 0.012)	———
Valve guide to valve stem clearance	IN.	0.020 – 0.047 (0.0008 – 0.0019)	———
	EX.	0.030 – 0.057 (0.0012 – 0.0022)	———
Valve guide I.D.	IN. & EX.	4.500 – 4.512 (0.1772 – 0.1776)	———
Valve stem O.D.	IN.	4.465 – 4.480 (0.1758 – 0.1764)	———
	EX.	4.455 – 4.470 (0.1754 – 0.1760)	———
Valve stem deflection	IN. & EX.	———	0.35 (0.014)
Valve stem runout	IN. & EX.	———	0.05 (0.002)
Valve head thickness	IN. & EX.	———	0.5 (0.02)
Valve seat width	IN. & EX.	0.9 – 1.1 (0.035 – 0.043)	———
Valve head radial runout	IN. & EX.	———	0.03 (0.001)
Valve spring free length (IN. & EX.)	INNER	———	36.8 (1.45)
	OUTER	———	39.8 (1.57)
Valve spring tension (IN. & EX.)	INNER	4.2 – 4.8 kgf (9.26 – 10.58 lbs) at length 29.9 mm (1.18 in)	———
	OUTER	17.0 – 19.6 kg (37.48 – 43.21 lbs) at length 33.4 mm (1.31 in)	———

CAMSHAFT + CYLINDER HEAD

Unit: mm (in)

ITEM	STD/SPEC.		LIMIT
Cam height	IN.	35.480 – 35.530 (1.397 – 1.399)	35.18 (1.385)
	EX.	33.480 – 33.530 (1.318 – 1.320)	33.18 (1.306)
Camshaft journal oil clearance	IN. & EX.	0.032 – 0.066 (0.0013 – 0.0026)	0.150 (0.0059)
Camshaft journal holder I.D.	IN. & EX.	22.012 – 22.025 (0.8666 – 0.8671)	———
Camshaft journal O.D.	IN. & EX.	21.959 – 21.980 (0.8645 – 0.8654)	———
Camshaft runout	IN. & EX.	———	0.10 (0.004)
Cam chain pin (at arrow "3")	16th pin		———
Cylinder head distortion	———		0.05 (0.002)

CONROD + CRANKSHAFT

Unit: mm (in)

ITEM	STD/SPEC.	LIMIT
Conrod small end I.D.	20.010 – 20.018 (0.7878 – 0.7881)	20.040 (0.7890)
Conrod big end side clearance	0.170 – 0.320 (0.0067– 0.0126)	0.5 (0.02)
Conrod big end width	20.95 – 21.00 (0.825 – 0.827)	———
Crank pin width	42.17 – 42.22 (1.660 – 1.662)	———
Conrod big end oil clearance	0.032 – 0.056 (0.0013 – 0.0022)	0.080 (0.0031)
Crank pin O.D.	37.976 – 38.000 (1.4951 – 1.4960)	———
Crankshaft journal oil clearance	0.008 – 0.035 (0.0003 – 0.0014)	0.080 (0.0031)
Crankshaft journal O.D.	41.985 – 42.000 (1.6529 – 1.6535)	———
Crankshaft thrust bearing thickness	1.925 – 2.175 (0.0758 – 0.0856)	———
Crankshaft thrust clearance	0.050 – 0.110 (0.0020 – 0.0043)	———
Crankshaft runout	———	0.05 (0.002)

OIL PUMP

ITEM	STD/SPEC.	LIMIT
Oil pressure (at 60°C, 140°F)	Above 200 kPa (2.0 kgf/cm², 28 psi) Below 600 kPa (6.0 kgf/cm², 85 psi) at 3 000 r/min	———

CLUTCH

Unit: mm (in)

ITEM	STD/SPEC.		LIMIT
Clutch cable play	10 – 15 (0.4 – 0.6)		———
Clutch release screw	1/4 turn(s) back		———
Drive plate thickness	No.1	2.92 – 3.08 (0.115 – 0.121)	2.62 (0.103)
	No.2	3.42 – 3.58 (0.135 – 0.141)	3.12 (0.123)
Drive plate claw width	No.1 & No.2	15.9 – 16.0 (0.626 – 0.630)	15.1 (0.59)
Driven plate distortion	———		0.10 (0.004)
Clutch spring free length	58.9 (2.32)		56.0 (2.20)

TRANSMISSION + DRIVE CHAIN

Unit: mm (in)

ITEM	STD/SPEC.			LIMIT
Primary reduction ratio	2.088 (71/34)			———
Final reduction ratio	SV650S	2.933 (44/15)		———
	SV650	3.000 (45/15)		———
Gear ratios	Low	2.461 (32/13)		———
	2nd	1.777 (32/18)		———
	3rd	1.380 (29/21)		———
	4th	1.125 (27/24)		———
	5th	0.961 (25/26)		———
	Top	0.851 (23/27)		———
Shift fork to groove clearance	0.1 – 0.3 (0.004 – 0.012)			0.5 (0.020)
Shift fork groove width	5.5 – 5.6 (0.217 – 0.220)			———
Shift fork thickness	5.3 – 5.4 (0.209 – 0.213)			———
Drive chain	Type	DID525V8		———
	Links	SV650	110 Links	———
		SV650S	108 Links	———
	20-pitch length	———		319.4 (12.57)
Drive chain slack (on side-stand)	20 – 30 (0.79 – 1.18)			———
Gearshift lever height	SV650S	60 – 70 (2.4 – 2.8)		———
	SV650	55 – 60 (2.2 – 2.4)		———

THERMOSTAT + RADIATOR + FAN + COOLANT

ITEM	STD/SPEC.		LIMIT
Thermostat valve opening temperature	Approx. 82°C (179.6°F)		———
Thermostat valve lift	Over 8.0 mm (0.31 in) at 95°C (203°F)		———
Engine coolant temperature switch operating temperature	OFF → ON	Approx. 115°C (239°F)	———
	ON → OFF	Approx. 108°C (226.4°F)	———
Radiator cap valve opening pressure	95 – 125 kPa (0.95 – 1.25 kgf/cm^2, 13.5 – 17.8 psi)		———
Cooling fan thermo-switch operating temperature	OFF → ON	Approx. 96°C (204.8°F)	———
	ON → OFF	Approx. 91 °C (195.8°F)	———
Engine coolant type	Use an anti-freeze/coolant compatible with aluminum radiator, mixed with distilled water only, at the ratio of 50:50.		———
Engine coolant including reserve	Reserve tank side	Approx. 250 ml (0.26/0.22 US/Imp qt)	———
	Engine side	Approx. 1 350 ml (1.43/1.19 US/Imp qt)	———

CARBURETOR

ITEM		STD/SPEC.	
		E-02, 04, 17, 22, 24, 25, 34	E-03, 28
Carburetor type		MIKUNI BDSR39	←
Bore size		39 mm	←
I.D. No.		20F0	20F2
Idle r/min		1 300 ± 100 r/min	←
Fuel level		16.9 ± 0.5 mm (0.68 ± 0.02 in)	←
Float height		7.0 ± 0.5 mm (0.28 ± 0.02 in)	←
Main jet	(M.J.)	#137.5	#137.5
Jet needle	(J.N.)	6E38-54-2	6E42-52
Needle jet	(N.J.)	P-0	P-0M
Throttle valve	(Th.V.)	#95	←
Pilot jet	(P.J.)	#17.5	#15
Pilot screw	(P.S.)	PRE-SET (2½ turns back)	PRE-SET (3 turns back)
Throttle cable play		2.0 – 4.0 mm (0.08 – 0.16 in)	←

CARBURETOR

ITEM		STD/SPEC.	
		E-33	E-22 (U-Type)
Carburetor type		MIKUNI BDSR39	←
Bore size		39 mm	←
I.D. No.		20F4	20F5
Idle r/min		1 300 ± 100 r/min	←
Fuel level		16.9 ± 0.5 mm (0.68 ± 0.02 in)	←
Float height		7.0 ± 0.5 mm (0.28 ± 0.02 in)	←
Main jet	(M.J.)	#137.5	#137.5
Jet needle	(J.N.)	6E43-54	6E38-54-2
Needle jet	(N.J.)	P-0M	P-0
Throttle valve	(Th.V.)	#95	←
Pilot jet	(P.J.)	#15	#17.5
Pilot screw	(P.S.)	PRE-SET	PRE-SET (3½ turns back)
Throttle cable play		2.0 – 4.0 mm (0.08 – 0.16 in)	←

CARBURETOR

ITEM		STD/SPEC.
		E-18
Carburetor type		MIKUNI BDSR39
Bore size		39 mm
I.D. No.		20F3
Idle r/min		1 300 ± 50 r/min
Fuel level		16.9 ± 0.5 mm (0.68 ± 0.02 in)
Float height		7.0 ± 0.5 mm (0.28 ± 0.02 in)
Main jet	(M.J.)	#137.5
Jet needle	(J.N.)	6E38-54-2
Needle jet	(N.J.)	P-2
Throttle valve	(Th.V.)	#95
Pilot jet	(P.J.)	#15
Pilot screw	(P.S.)	PRE-SET (2¾ turns back)
Throttle cable play		2.0 – 4.0 mm (0.08 – 0.16 in)

ELECTRICAL

ITEM		STD/SPEC.		NOTE
Firing order		1 · 2		
Spark plug		Type	NGK: CR8E DENSO: U24ESR-N	
		Gap	0.7 – 0.8 mm (0.028 – 0.031 in)	
Spark performance		Over 8 mm (0.3 in) at 1 atm.		
Signal coil resistance		140 – 230 Ω		
Signal coil peak voltage		More than 3 V		
Ignition coil resistance		Primary	3.5 – 5.5 Ω	Terminal – Terminal
		Secondary	20 – 31 kΩ	Plug cap – Terminal
Ignition coil primary peak voltage		More than 150 V		
Generator coil resistance		0.2 – 0.55 Ω		
Generator Max. output		Approx. 300 W at 5 000 r/min		
Generator no-load voltage (When cold)		More than 70 V (AC) at 5 000 r/min		
Regulated voltage		13.5 – 15.0 V at 5 000 r/min		
Starter relay resistance		3 – 6 Ω		
Battery	Type designation	YT12A-BS		
	Capacity	12 V 36.0 kC (10Ah)/10HR		
Fuse size		Headlight	HI	15A
			LO	15A
		Signal	15A	
		Ignition	10A	
		Meter	10A	
		Main	30A	

WATTAGE

ITEM		STD/SPEC.			
		SV650S		SV650	
		E-02, 03, 24, 28, 33	The other countries	E-03, 24, 28, 33	The other countries
Headlight	HI	45 W × 2	55 W	60 W	←
	LO	45 W × 2	55 W	55 W	←
Parking or position light		5 W	←		5 W
Brake light/Taillight		21/5 W × 2	←	←	←
Turn signal light		21 W	←	←	←
License light		5 W	←	←	←
Speedometer light		0.84 W × 3	←	1.7 W × 2	←
Turn signal indicator light		3 W	←	1.7 W	←
High beam indicator light		1.7 W	←	←	←
Neutral indicator light		1.7 W	←	←	←
Oil pressure indicator light		1.7 W	←	←	←

BRAKE + WHEEL

Unit: mm (in)

ITEM		STD/SPEC.	LIMIT
Rear brake pedal free travel		20 – 30 (0.8 – 1.2)	———
Rear brake pedal height		55 – 65 (2.17 – 2.56)	———
Brake disc thickness	Front	4.5 (0.18)	4.0 (0.16)
	Rear	5.0 (0.20)	4.5 (0.18)
Brake disc runout		———	0.3 (0.012)
Master cylinder bore	Front	15.870 – 15.913 (0.6248 – 0.6265)	———
	Rear	12.700 – 12.743 (0.5000 – 0.5017)	———
Master cylinder piston diam.	Front	15.827 – 15.854 (0.6231 – 0.6242)	———
	Rear	12.657 – 12.684 (0.4983 – 0.4994)	———
Brake caliper cylinder bore	Front	30.230 – 30.306 (1.1902 – 1.1931)	———
	Rear	38.180 – 38.256 (1.5031 – 1.5061)	———
Brake caliper piston diam.	Front	30.150 – 30.200 (1.1870 – 1.1890)	———
	Rear	38.098 – 38.148 (1.4999 – 1.5019)	———
Brake fluid type		DOT 4	
Wheel rim runout	Axial	———	2.0 (0.08)
	Radial	———	2.0 (0.08)
Wheel rim size	Front	17 × MT3.50	———
	Rear	17 × MT4.50	———
Wheel axle runout	Front	———	0.25 (0.010)
	Rear	———	0.25 (0.010)

TIRE

Unit: mm (in)

ITEM	STD/SPEC.		LIMIT
Cold inflation tire pressure (Solo riding)	Front	225 kPa (2.25 kgf/cm², 33 psi)	———
	Rear	250 kPa (2.50 kgf/cm², 36 psi)	———
Cold inflation tire pressure (Dual riding)	Front	225 kPa (2.25 kgf/cm², 33 psi)	———
	Rear	250 kPa (2.50 kgf/cm², 36 psi)	———
Tire size	Front	120/60ZR17 (55W)	———
	Rear	160/60ZR17 (69W)	———
Tire type	Front	METZELER: MEZ4 FRONT	———
	Rear	METZELER: MEZ4	———
Tire tread depth [Recommend depth]	Front	———	0.8 (0.03) [1.6 (0.06)]
	Rear	———	0.8 (0.03) [2.0 (0.08)]

SUSPENSION

Unit: mm (in)

ITEM	STD/SPEC.		LIMIT
Front fork stroke	130 (5.1)		———
Front fork spring free length	314.6 (12.39)		308 (12.13)
Front fork oil level (without spring, inner tube fully compressed)	E-03, 33	102 (4.02)	———
	Others	104 (4.09)	———
Front fork oil type	SUZUKI FORK OIL G10 (#10) or equivalent fork oil		———
Front fork oil capacity (each leg)	E-03, 33	491 ml (16.6/17.3 US/Imp oz)	———
	Others	489 ml (16.5/17.2 US/Imp oz)	———
Rear shock absorber spring adjuster	SV650S	4/7	———
	SV650	2/7	———
Rear wheel travel	125 (4.9)		———
Swingarm pivot shaft runout	———		0.3 (0.01)

FUEL + OIL

ITEM	STD/SPEC.		NOTE
Fuel type	Use only unleaded gasoline of at least 87 pump octane ($\frac{R+M}{2}$) or 91 octane or higher rated by the research method. Gasoline containing MTBE (Methyl Tertiary Butyl Ether), less than 10% ethanol, or less than 5% methanol with appropriate cosolvents and corrosion inhibitor is permissible.		E-03, 33
	Use only unleaded gasoline of at least 87 pump octane ($\frac{R+M}{2}$) or 91 octane or higher rated by the research method.		E-28
	Gasoline used should be graded 91 octane or higher. An unleaded gasoline is recommended.		The others
Fuel tank capacity	15 L (4.0/3.3 US/Imp gal)		E-33
	16 L (4.2/3.5 US/Imp gal)		The others
Engine oil type	SAE 10W/40, API SF or SG		
Engine oil capacity	Change	2 300 ml (2.4/2.0 US/Imp qt)	
	Filter change	2 400 ml (2.5/2.1US/Imp qt)	
	Overhaul	3 000 ml (3.2/2.6 US/Imp qt)	

EMISSION CONTROL INFORMATION

CONTENTS

EMISSION CONTROL CARBURETOR COMPONENTS 9- 2
EVAPORATIVE EMISSION CONTROL SYSTEM 9- 3
CANISTER HOSE ROUTING 9- 4
EVAPORATIVE EMISSION CONTROL SYSTEM INSPECTION 9- 5
PAIR (AIR SUPPLY) SYSTEM DIAGRAM 9- 6
PAIR (AIR SUPPLY) SYSTEM HOSE ROUTING 9- 7
IPAIR (AIR SUPPLY) SYSTEM INSPECTION 9- 8

EMISSION CONTROL CARBURETOR COMPONENTS

SV650 motorcycles are equipped with precision, manufactured carburetors for emission level control. These carburetors require special mixture control components and other precision adjustments to function properly.

There are several carburetor mixture control components in each caburetor assembly. Three (3) of these components are machined to much closer tolerances than standard machined caburetor jets. These three (3) particular jets – MAIN JET, NEEDLE JET, PILOT JET, – must not be replaced by standard jets. To aid in identifying these three (3) jets a different design of letter and number are used. If replacement of these close tolerance jets becomes necessary, be sure to replace them with the same type close toleance jets marked as in the examples shown below.

The jets needle is also of special manufacture. Only one clip position is provided on the jet needle. If replacement becomes necessary the jet needle may only be replaced with an equivalent performing replacement component. Suzuki recommends that Genuine Suzuki parts be utilized whenever possible for the best possible performance and durability.

Conventional Figures Used on Standard Tolerance Jet Components	1 2 3 4 5 6 7 8 9 0
Emission Type Figures Used on Close Tolerance Jet Components	1 2 3 4 5 6 7 8 9 0

The carburetor specifications for the emission-controlled SV650/S are as follows.

Carburetor I.D. No.	Main Jet	Needle Jet	Jet Needle	Pilot Jet	Pilot Screw
20F4 (California modele only)	#137.5	P-0M	6E43 – 54	#15	PRE-SET DO NOT ADJUST
20F2	#137.5	P-0M	6E42 – 54	#15	PRE-SET DO NOT ADJUST

Adjusting, interferring with, impoper replacement, or resetting of any of the carburetor components may adversely affect carburetor performance and cause the motorcycle to exceed the exhaust emission level limits. If unable to effect repairs,contact the distributors representative for further technical information and assistance.

EVAPORATIVE EMISSION CONTROL SYSTEM
(California model only)

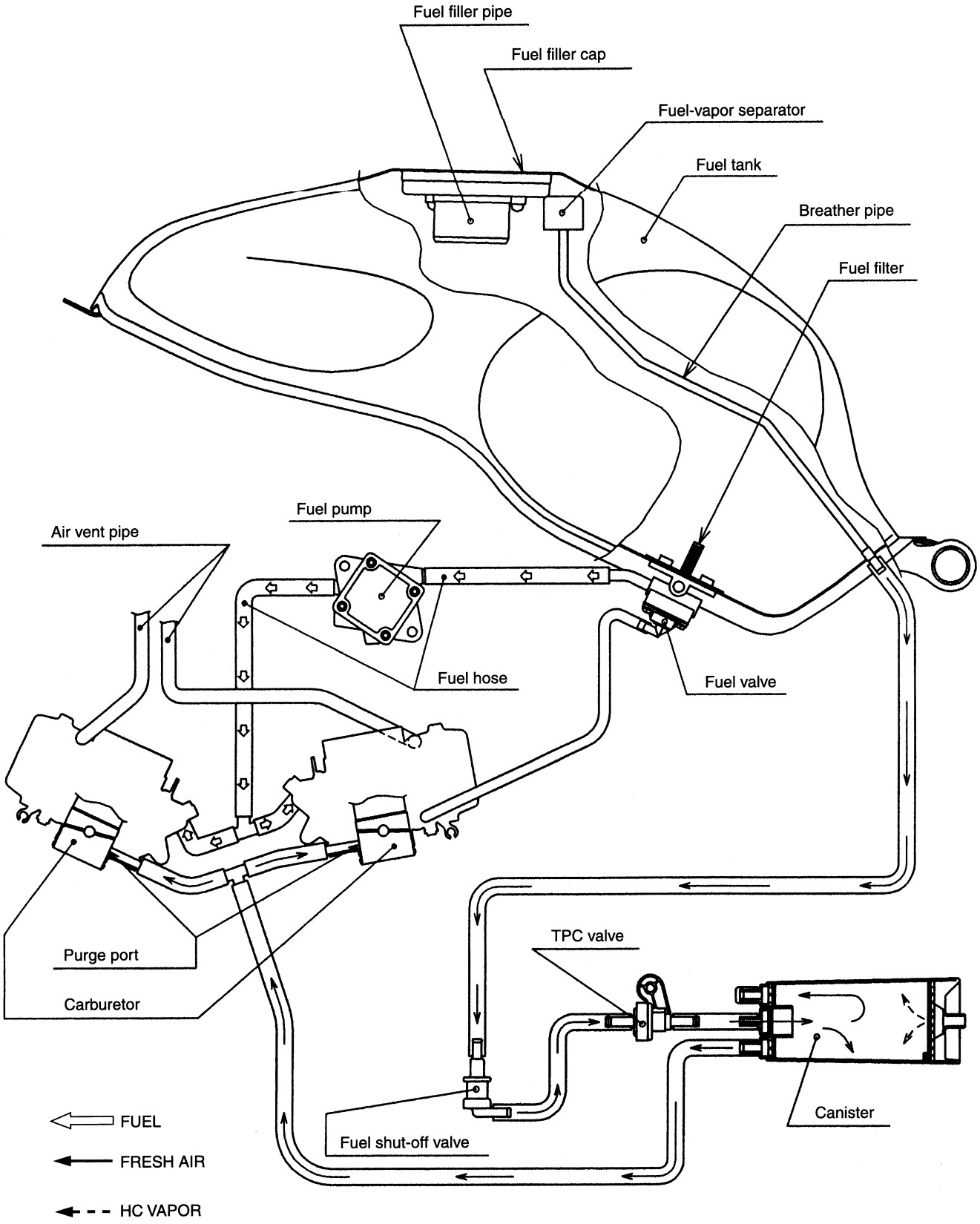

CANISTER HOSE ROUTING (California model only)

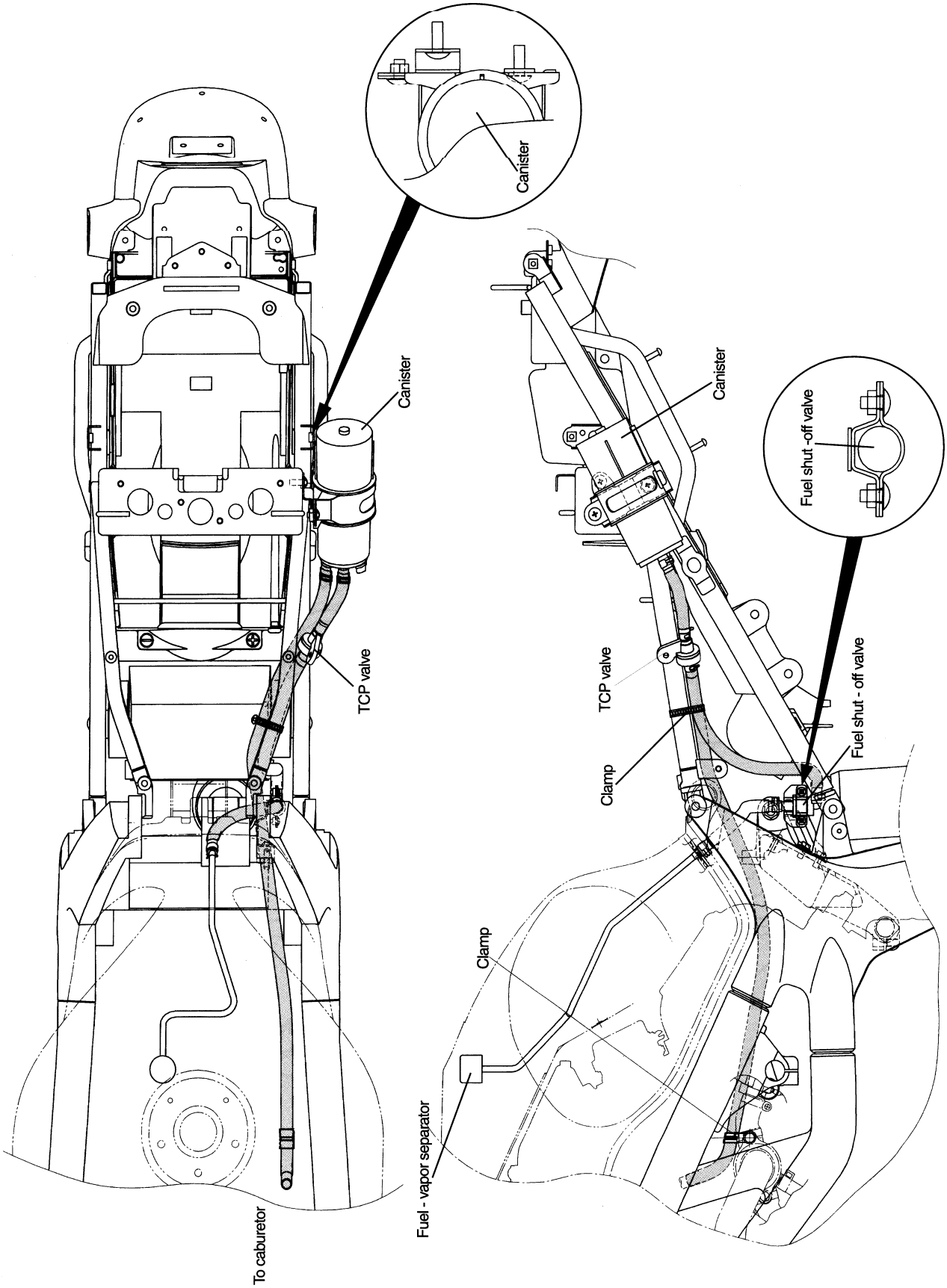

EVAPORATIVE EMISSION CONTROL SYSTEM INSPECTION (California model only)

- Remove the seats and the seat tail cover. (☞ 6-3, 6-4)
- Lift and support the fuel tank. (☞ 4-4)

HOSES

Inspect the hoses for wear or damage.
Inspect the hoses for connection.

CANISTER

Inspect the canister for damage to the body.

TANK PRESSURE CONTROL VALVE

Inspect the tank pressure contorol valve body for damage.
Inspect the tank pressure control valve operation as shown below.

- Remove the tank pressure control valve.
- Apply air pressure to the tank pressure control valve from the side Ⓐ, inspect that there should be flow out through the purge control valve.
- Apply air pressure to the tank pressure control valve from the side Ⓑ, inspect that there should be flow out through the purge valve.
- If operation differs from that listed above, the tank pressure control valve must be replaced.

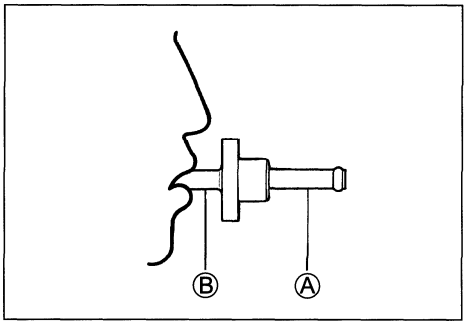

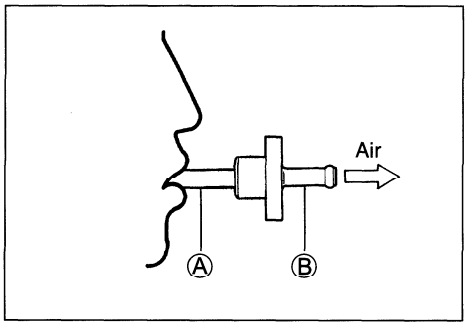

⚠ WARNING

Gsoline and gasoline vapor is toxic. A small amount of fuel is remaining in the tank pressure control valve, when checking it.
Do not swallow the fuel when blowing the tank pewssure control valve.

NOTE:

When the tank pressure control valve is connected to the hose, the side Ⓑ should face towards the fuel shut-off valve side ,and the side Ⓐ should face towards the canistre side.

PAIR (AIR SUPPLY) SYSTEM DIAGRAM

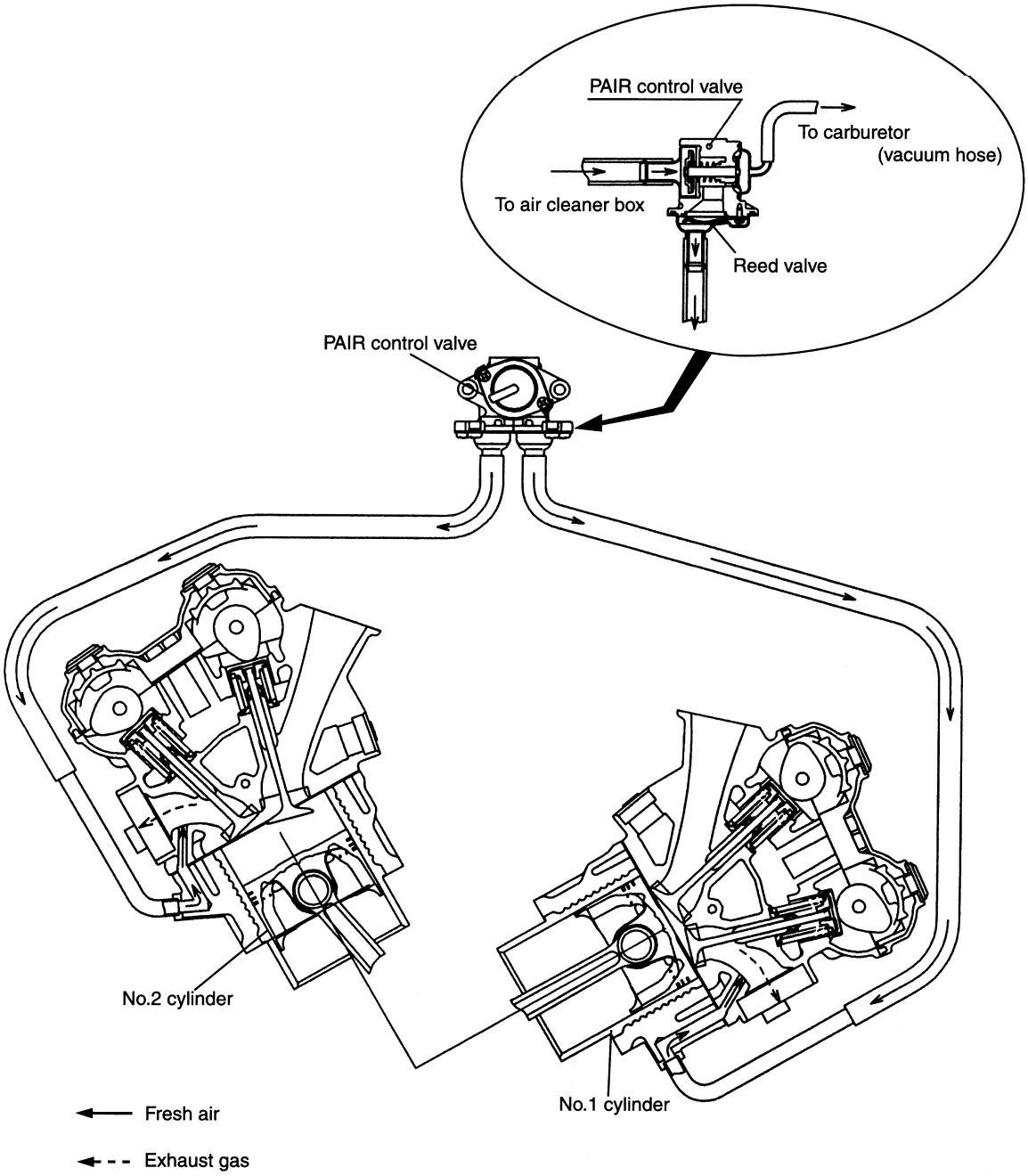

PAIR (AIR SUPPLY) SYSTEM HOSE ROUTING

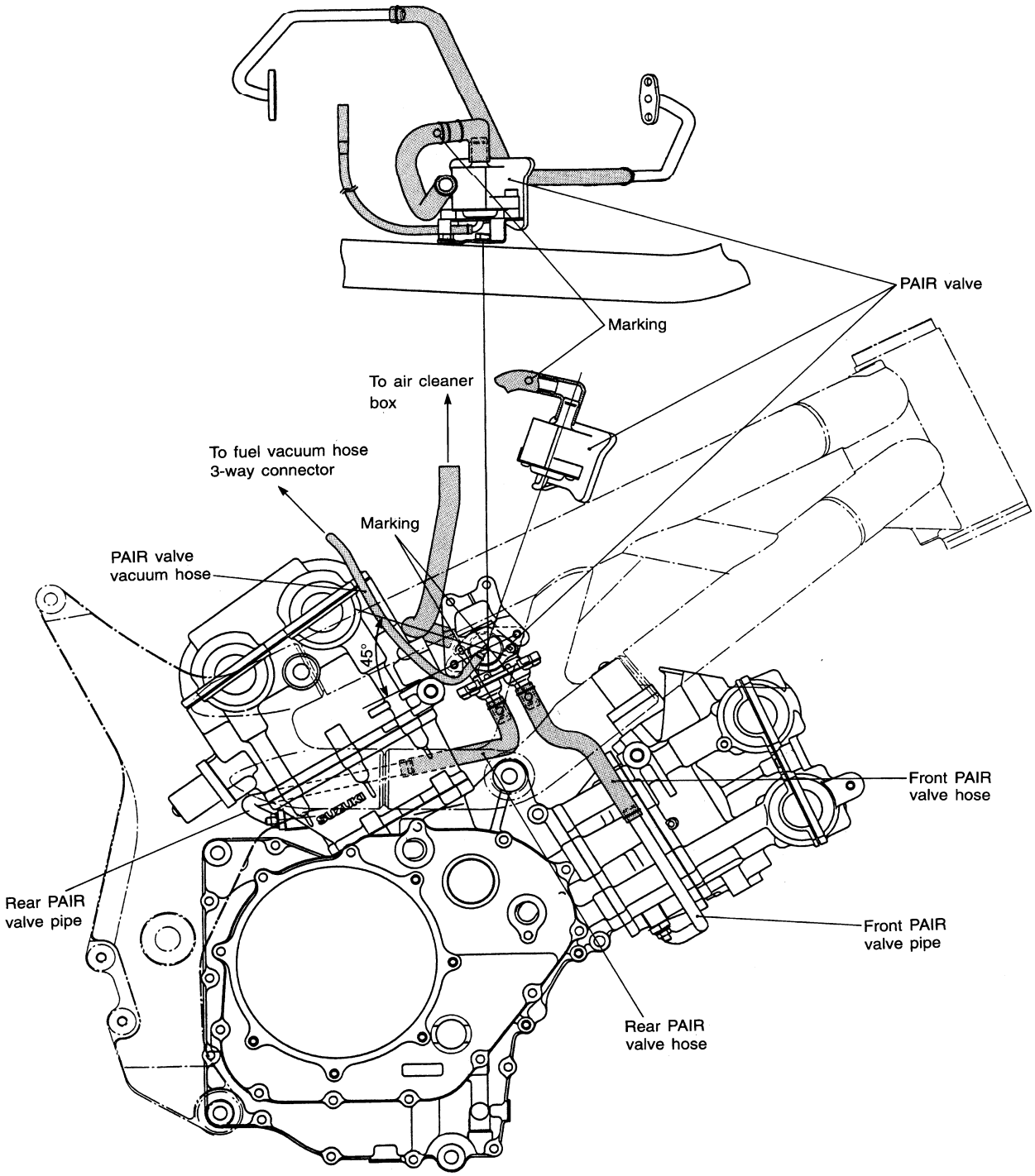

PAIR (AIR SUPPLY) SYSTEM INSPECTION (California model only)

• Lift and support the fuel tank. (☞ 4-4)

HOSES AND PIPES

Inspect the hoses and pipes for or damage.
Inspect the hoses and pipes for connection.

PAIR CONTROL VALVE

Inspect the PIAR control valve for damage of the body.

REED VALVE OF PAIR CONTROL VALVE

• Remove the PAIR control valve.
• Remove the reed valve.
• Inspect the reed valve for damage and carbon deposit.
• If the carbon deposit is found in reed valve, replace the PAIR control valve with a new one.

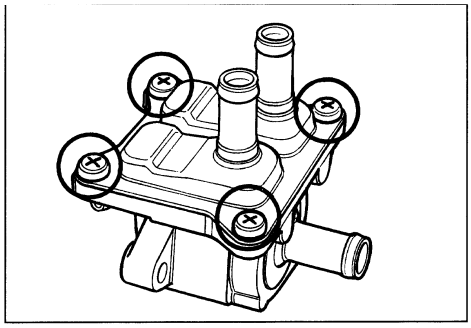

PAIR CONTROL VALVE

• Remove the PAIR control valve.
• Blow the air inlet port of the control valve shown in the illustration.
• If air does not flow out, replace the control valve with a new one.

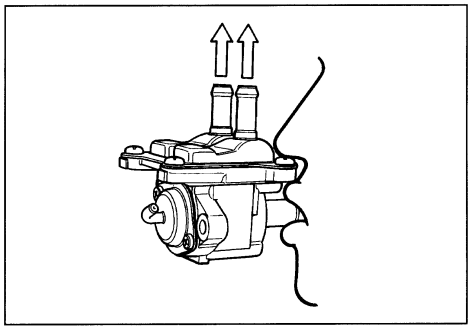

• Connect the vacuum pump to the vacuum port of the control valve as shown in the illustration.
• Apply nefative pressure slowly to the control valve and blow the adove manner.
• If air does not become flow out within the specification, the control valve is normal condition.
• If the control valve dose not function within the specification, replace control valve with a new one.

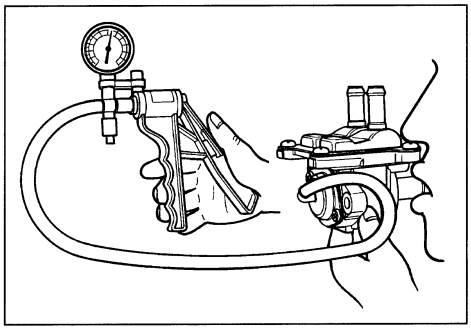

DATA Negarive pressure range: 30.7 – 53.3 kPa (230 – 400 mmHg)

TOOL 09917-47010: Vacuum pump gauge

⚠ CAUTION

Use a hand operated vacuum pump to prevent the control valve damage.

SV650Y ('00-MODEL)

CONTENTS

SPECIFICATIONS **10- 2**
SERVICE DATA **10- 4**

NOTE:

- *The specifications and service data are the same as X-MODEL.*
- *Please refer to the sections 1 through 9 for details which are not given in this section.*

SPECIFICATIONS

DIMENSIONS AND DRY MASS

Overall length	2 070 mm (81.5 in)
Overall width	750 mm (29.5 in)
Overall height	1 060 mm (41.7 in)
Wheelbase	1 430 mm (56.3 in)
Ground clearnce	140 mm (5.5 in)
Seat height	805 mm (31.7 in)
Dry mass	165 kg (363 lbs)

ENGINE

Type	Four-stroke, Liquid-cooled, DOHC, TSCC, 90-degree V-twin
Number of cylinders	2
Tappet clearance, IN	0.10 – 0.20 mm (0.004 – 0.008 in)
EX	0.20 – 0.30 mm (0.008 – 0.012 in)
Bore	81.0 mm (3.189 in)
Stroke	62.6 mm (2.465 in)
Piston displacement	645 cm^3 (39.4 cu. in)
Compression ratio	11.5 : 1
Carburetor	MIKUNI BDSR39 × 2
Air cleaner	Non-woven fabric element
Starter system	Electric starter
Lubrication system	Wet sump

TRANSMISSION

Clutch	Wet multi-plate type
Transmission	6-speed constant, mesh
Gearshift pattern	1-down, 5-up
Primary reduction ratio	2.088 (71/34)
Gear ratios, Low	2.461 (32/13)
2nd	1.777 (32/18)
3rd	1.380 (29/21)
4th	1.125 (27/24)
5th	0.961 (25/26)
Top	0.851 (23/27)
Final reduction ratio	3.000 (45/15)
Drive chain	D.I.D 525 V8, 110 links

CHASSIS

Front suspension	Telescopic, coil spring, oil damped
Rear suspension	Link type system, gas/oil damped, coil spring
Front fork stroke	130 mm (5.1 in)
Rear wheel travel	125 mm (4.9 in)
Steering angle	33° (right & left)
Caster	25°
Trail	100 mm (3.94 in)
Turning radius	2.9 m (9.5 ft)
Front brake	Disc brake, twin hydraulically operated
Rear brake	Disc brake, hydraulically operated
Front tire size	120/60 ZR17 (55 W), tubeless
Rear tire size	160/60 ZR17 (69 W), tubeless

ELECTRICAL

Ignition type	Electronic ignition (Transistorized)
Ignition timing	5° B.T.D.C. at 1 300 r/min
Spark plug	NGK CR8E, DENSO U24ESR-N
Battery	12V 36.0 kC(10 Ah)/10HR
Generator	Three-phase A.C. Generator
Main fuse	30A
Fuse	15/15/15/10/10A
Headlight	12V 60/55W
Turn signal light	12V 21W
Brake light/Taillight	12V 21/5W × 2
License plate light	12V 5W
Speedometer light	12V 1.7W × 2
Neutral indicator light	12V 1.7W
High beam indicator light	12V 1.7W
Turn signal indicator light	12V 1.7W
Oil pressure indicator light	12V 1.7W

CAPACITIES

Fuel tank, including reserve	16.0 L (4.2/3.5 US/Imp gal)
	15.0 L (4.0/3.3 US/Imp gal) ..... Only for E-33
Engine oil, oil change	2 300 ml (2.4/2.0 US/Imp qt)
with filter change	2 400 ml (2.5/2.1 US/Imp qt)
overhaul	2 700 ml (2.9/2.4 US/Imp qt)
Coolant	1 600 ml (1.7/1.4 US/Imp qt)

These specifications are subject to change without notice.

CAMSHAFT + CYLINDER HEAD

Unit: mm (in)

ITEM	STD/SPEC.		LIMIT
Cam height	IN.	35.480 – 35.530 (1.397 – 1.399)	35.18 (1.385)
	EX.	33.480 – 33.530 (1.318 – 1.320)	33.18 (1.306)
Camshaft journal oil clearance	IN. & EX.	0.032 – 0.066 (0.0013 – 0.0026)	0.150 (0.0059)
Camshaft journal holder I.D.	IN. & EX.	22.012 – 22.025 (0.8666 – 0.8671)	———
Camshaft journal O.D.	IN. & EX.	21.959 – 21.980 (0.8645 – 0.8654)	———
Camshaft runout	IN. & EX.	———	0.10 (0.004)
Cam chain pin (at arrow "3")	16th pin		———
Cylinder head distortion	———		0.05 (0.002)

CYLINDER + PISTON + PISTON RING

Unit: mm (in)

ITEM	STD/SPEC.		LIMIT
Compression pressure	1 500 kPa (15 kgf/cm² 213 psi)		1 100 kPa (11 kgf/cm² 156 psi)
Compression pressure difference	———		200 kPa (2 kgf/cm² 28 psi)
Piston to cylinder clearance	0.055 – 0.065 (0.0022 – 0.0026)		0.120 (0.0047)
Cylinder bore	81.000 – 81.015 (3.1890 – 3.1896)		81.075 (3.1919)
Piston diam.	80.940 – 80.955 (3.1866 – 3.1872) Measure at 20 mm (0.79 in) from the skirt end.		80.88 (3.184)
Cylinder distortion	———		0.05 (0.002)
Piston ring free end gap	1st	Approx. 9.9 (0.39)	7.9 (0.31)
	2nd	Approx. 10.5 (0.41)	8.4 (0.33)
Piston ring end gap	1st	0.20 – 0.35 (0.008 – 0.014)	0.70 (0.028)
	2nd	0.20 – 0.35 (0.008 – 0.014)	0.70 (0.028)
Piston ring to groove clearance	1st	———	0.180 (0.0071)
	2nd	———	0.150 (0.0059)
Piston ring groove width	1st	1.21 – 1.23 (0.0476 – 0.0484)	———
	2nd	1.01 – 1.03 (0.0398 – 0.0406)	———
	Oil	2.01 – 2.03 (0.0791 – 0.0799)	———

ITEM	STD/SPEC.		LIMIT
Piston ring thickness	1st	1.17 – 1.19 (0.0461 – 0.0469)	———
	2nd	0.97 – 0.99 (0.0382 – 0.0390)	———
Piston pin bore	20.002 – 20.008 (0.7875 – 0.7877)		20.030 (0.7886)
Piston pin O.D.	19.992 – 20.000 (0.7871 – 0.7874)		19.980 (0.7866)

CONROD + CRANKSHAFT

Unit: mm (in)

ITEM	STD/SPEC.	LIMIT
Conrod small end I.D.	20.010 – 20.018 (0.7878 – 0.7881)	20.040 (0.7890)
Conrod big end side clearance	0.170 – 0.320 (0.0067– 0.0126)	0.5 (0.02)
Conrod big end width	20.95 – 21.00 (0.825 – 0.827)	———
Crank pin width	42.17 – 42.22 (1.660 – 1.662)	———
Conrod big end oil clearance	0.032 – 0.056 (0.0013 – 0.0022)	0.080 (0.0031)
Crank pin O.D.	37.976 – 38.000 (1.4951 – 1.4960)	———
Crankshaft journal oil clearance	0.008 – 0.035 (0.0003 – 0.0014)	0.080 (0.0031)
Crankshaft journal O.D.	41.985 – 42.000 (1.6529 – 1.6535)	———
Crankshaft thrust bearing thickness	1.925 – 2.175 (0.0758 – 0.0856)	———
Crankshaft thrust clearance	0.050 – 0.110 (0.0020 – 0.0043)	———
Crankshaft runout	———	0.05 (0.002)

OIL PUMP

ITEM	STD/SPEC.	LIMIT
Oil pressure (at 60°C, 140°F)	Above 200 kPa (2.0 kgf/cm^2, 28 psi) Below 600 kPa (6.0 kgf/cm^2, 85 psi) at 3 000 r/min	———

CLUTCH

Unit: mm (in)

ITEM	STD/SPEC.		LIMIT
Clutch cable play	10 – 15 (0.4 – 0.6)		———
Clutch release screw	1/4 turn(s) back		———
Drive plate thickness	No.1	2.92 – 3.08 (0.115 – 0.121)	2.62 (0.103)
	No.2	3.42 – 3.58 (0.135 – 0.141)	3.12 (0.123)
Drive plate claw width	No.1 & No.2	15.9 – 16.0 (0.626 – 0.630)	15.1 (0.59)
Driven plate distortion	———		0.10 (0.004)
Clutch spring free length	58.9 (2.32)		56.0 (2.20)

TRANSMISSION + DRIVE CHAIN

Unit: mm (in)

ITEM	STD/SPEC.			LIMIT
Primary reduction ratio	2.088 (71/34)			———
Final reduction ratio	SV650S	2.933 (44/15)		———
	SV650	3.000 (45/15)		———
Gear ratios	Low	2.461 (32/13)		———
	2nd	1.777 (32/18)		———
	3rd	1.380 (29/21)		———
	4th	1.125 (27/24)		———
	5th	0.961 (25/26)		———
	Top	0.851 (23/27)		———
Shift fork to groove clearance	0.1 – 0.3 (0.004 – 0.012)			0.5 (0.020)
Shift fork groove width	5.5 – 5.6 (0.217 – 0.220)			———
Shift fork thickness	5.3 – 5.4 (0.209 – 0.213)			———
Drive chain	Type	DID525V8		———
	Links	SV650	110 Links	———
		SV650S	108 Links	———
	20-pitch length	———		319.4 (12.57)
Drive chain slack (on side-stand)	20 – 30 (0.79 – 1.18)			———
Gearshift lever height	SV650S	60 – 70 (2.4 – 2.8)		———
	SV650	55 – 60 (2.2 – 2.4)		———

THERMOSTAT + RADIATOR + FAN + COOLANT

ITEM	STD/SPEC.		LIMIT
Thermostat valve opening temperature	Approx. 82°C (179.6°F)		———
Thermostat valve lift	Over 8.0 mm (0.31 in) at 95°C (203°F)		———
Engine coolant temperature switch operating temperature	OFF → ON	Approx. 115°C (239°F)	———
	ON → OFF	Approx. 108°C (226.4°F)	———
Radiator cap valve opening pressure	95 – 125 kPa (0.95 – 1.25 kgf/cm², 13.5 – 17.8 psi)		———
Cooling fan thermo-switch operating temperature	OFF → ON	Approx. 96°C (204.8°F)	———
	ON → OFF	Approx. 91 °C (195.8°F)	———
Engine coolant type	Use an anti-freeze/coolant compatible with aluminum radiator, mixed with distilled water only, at the ratio of 50:50.		———
Engine coolant including reserve	Reserve tank side	Approx. 250 ml (0.26/0.22 US/Imp qt)	———
	Engine side	Approx. 1 350 ml (1.43/1.19 US/Imp qt)	———

CARBURETOR

ITEM	STD/SPEC.	
	E-02, 04, 17, 22, 24, 25, 34	E-03, 28
Carburetor type	MIKUNI BDSR39	←
Bore size	39 mm	←
I.D. No.	20F0	20F2
Idle r/min	1 300 ± 100 r/min	←
Fuel level	16.9 ± 0.5 mm (0.68 ± 0.02 in)	←
Float height	7.0 ± 0.5 mm (0.28 ± 0.02 in)	←
Main jet (M.J.)	#137.5	#137.5
Jet needle (J.N.)	6E38-54-2	6E42-52
Needle jet (N.J.)	P-0	P-0M
Throttle valve (Th.V.)	#95	←
Pilot jet (P.J.)	#17.5	#15
Pilot screw (P.S.)	PRE-SET (2½ turns back)	PRE-SET (3 turns back)
Throttle cable play	2.0 – 4.0 mm (0.08 – 0.16 in)	←

CARBURETOR

ITEM		STD/SPEC.	
		E-33	E-22 (U-Type)
Carburetor type		MIKUNI BDSR39	←
Bore size		39 mm	←
I.D. No.		20F4	20F5
Idle r/min		1 300 ± 100 r/min	←
Fuel level		16.9 ± 0.5 mm (0.68 ± 0.02 in)	←
Float height		7.0 ± 0.5 mm (0.28 ± 0.02 in)	←
Main jet	(M.J.)	#137.5	#137.5
Jet needle	(J.N.)	6E43-54	6E38-54-2
Needle jet	(N.J.)	P-0M	P-0
Throttle valve	(Th.V.)	#95	←
Pilot jet	(P.J.)	#15	#17.5
Pilot screw	(P.S.)	PRE-SET	PRE-SET (3½ turns back)
Throttle cable play		2.0 – 4.0 mm (0.08 – 0.16 in)	←

CARBURETOR

ITEM		STD/SPEC.
		E-18
Carburetor type		MIKUNI BDSR39
Bore size		39 mm
I.D. No.		20F3
Idle r/min		1 300 ± 50 r/min
Fuel level		16.9 ± 0.5 mm (0.68 ± 0.02 in)
Float height		7.0 ± 0.5 mm (0.28 ± 0.02 in)
Main jet	(M.J.)	#137.5
Jet needle	(J.N.)	6E38-54-2
Needle jet	(N.J.)	P-0
Throttle valve	(Th.V.)	#95
Pilot jet	(P.J.)	#15
Pilot screw	(P.S.)	PRE-SET (2¾ turns back)
Throttle cable play		2.0 – 4.0 mm (0.08 – 0.16 in)

ELECTRICAL

ITEM		STD/SPEC.		NOTE
Firing order		1 · 2		
Spark plug	Type	NGK: CR8E DENSO: U24ESR-N		
	Gap	0.7 – 0.8 mm (0.028 – 0.031 in)		
Spark performance		Over 8 mm (0.3 in) at 1 atm.		
Signal coil resistance		140 – 230 Ω		
Signal coil peak voltage		More than 3 V		
Ignition coil resistance	Primary	3.5 – 5.5 Ω		Terminal – Terminal
	Secondary	20 – 31 kΩ		Plug cap – Terminal
Ignition coil primary peak voltage		More than 150 V		
Generator coil resistance		0.2 – 0.55 Ω		
Generator Max. output		Approx. 300 W at 5 000 r/min		
Generator no-load voltage (When cold)		More than 70 V (AC) at 5 000 r/min		
Regulated voltage		13.5 – 15.0 V at 5 000 r/min		
Starter relay resistance		3 – 6 Ω		
Battery	Type designation	YT12A-BS		
	Capacity	12 V 36.0 kC (10Ah)/10HR		
Fuse size	Headlight	HI	15A	
		LO	15A	
	Signal	15A		
	Ignition	10A		
	Meter	10A		
	Main	30A		

WATTAGE

ITEM		STD/SPEC.			
		SV650S		SV650	
		E-02, 03, 24, 28, 33	The other countries	E-03, 24, 28, 33	The other countries
Headlight	HI	45 W × 2	55 W	60 W	←
	LO	45 W × 2	55 W	55 W	←
Parking or position light		5 W	←		5 W
Brake light/Taillight		21/5 W × 2	←	←	←
Turn signal light		21 W	←	←	←
License light		5 W	←	←	←
Speedometer light		0.84 W × 3	←	1.7 W × 2	←
Turn signal indicator light		3 W	←	1.7 W	←
High beam indicator light		1.7 W	←	←	←
Neutral indicator light		1.7 W	←	←	←
Oil pressure indicator light		1.7 W	←	←	←

BRAKE + WHEEL

Unit: mm (in)

ITEM		STD/SPEC.	LIMIT
Rear brake pedal free travel		20 – 30 (0.8 – 1.2)	———
Rear brake pedal height		55 – 65 (2.17 – 2.56)	———
Brake disc thickness	Front	4.5 (0.18)	4.0 (0.16)
	Rear	5.0 (0.20)	4.5 (0.18)
Brake disc runout		———	0.3 (0.012)
Master cylinder bore	Front	15.870 – 15.913 (0.6248 – 0.6265)	———
	Rear	12.700 – 12.743 (0.5000 – 0.5017)	———
Master cylinder piston diam.	Front	15.827 – 15.854 (0.6231 – 0.6242)	———
	Rear	12.657 – 12.684 (0.4983 – 0.4994)	———
Brake caliper cylinder bore	Front	30.230 – 30.306 (1.1902 – 1.1931)	———
	Rear	38.180 – 38.256 (1.5031 – 1.5061)	———
Brake caliper piston diam.	Front	30.150 – 30.200 (1.1870 – 1.1890)	———
	Rear	38.098 – 38.148 (1.4999 – 1.5019)	———
Brake fluid type		DOT 4	
Wheel rim runout	Axial	———	2.0 (0.08)
	Radial	———	2.0 (0.08)
Wheel rim size	Front	17 × MT3.50	———
	Rear	17 × MT4.50	———
Wheel axle runout	Front	———	0.25 (0.010)
	Rear	———	0.25 (0.010)

TIRE

Unit: mm (in)

ITEM	STD/SPEC.		LIMIT
Cold inflation tire pressure (Solo riding)	Front	225 kPa (2.25 kgf/cm², 33 psi)	———
	Rear	250 kPa (2.50 kgf/cm², 36 psi)	———
Cold inflation tire pressure (Dual riding)	Front	225 kPa (2.25 kgf/cm², 33 psi)	———
	Rear	250 kPa (2.50 kgf/cm², 36 psi)	———
Tire size	Front	120/60ZR17 (55W)	———
	Rear	160/60ZR17 (69W)	———
Tire type	Front	METZELER: MEZ4 FRONT	———
	Rear	METZELER: MEZ4	———
Tire tread depth	Front	———	1.6 (0.06)
	Rear	———	2.0 (0.08)

SUSPENSION

Unit: mm (in)

ITEM	STD/SPEC.		LIMIT
Front fork stroke	130 (5.1)		———
Front fork spring free length	314.6 (12.39)		308 (12.13)
Front fork oil level (without spring, inner tube fully compressed)	E-03, 33	102 (4.02)	———
	Others	104 (4.09)	———
Front fork oil type	SUZUKI FORK OIL G10 (#10) or equivalent fork oil		———
Front fork oil capacity (each leg)	E-03, 33	491 ml (16.6/17.3 US/Imp oz)	———
	Others	489 ml (16.5/17.2 US/Imp oz)	———
Rear shock absorber spring adjuster	SV650S	4/7	———
	SV650	2/7	———
Rear wheel travel	125 (4.9)		———
Swingarm pivot shaft runout	———		0.3 (0.01)

FUEL + OIL

ITEM	STD/SPEC.		NOTE
Fuel type	Use only unleaded gasoline of at least 87 pump octane ($\frac{R+M}{2}$) or 91 octane or higher rated by the research method. Gasoline containing MTBE (Methyl Tertiary Butyl Ether), less than 10% ethanol, or less than 5% methanol with appropriate cosolvents and corrosion inhibitor is permissible.		E-03, 33
	Use only unleaded gasoline of at least 87 pump octane ($\frac{R+M}{2}$) or 91 octane or higher rated by the research method.		E-28
	Gasoline used should be graded 91 octane or higher. An unleaded gasoline is recommended.		The others
Fuel tank capacity	15 L (4.0/3.3 US/Imp gal)		E-33
	16 L (4.2/3.5 US/Imp gal)		The others
Engine oil type	SAE 10W/40, API SF or SG		
Engine oil capacity	Change	2 300 ml (2.4/2.0 US/Imp qt)	
	Filter change	2 400 ml (2.5/2.1US/Imp qt)	
	Overhaul	3 000 ml (3.2/2.6 US/Imp qt)	

Prepared by

SUZUKI MOTOR CORPORATION

Motorcycle Service Department
2nd Ed. March, 2000
1st Ed. December, 1998
Part No. 99500-36091-03E
Printed in Japan

SV650Y ('00-MODEL)

CONTENTS

SPECIFICATIONS 10- 2
SERVICE DATA 10- 4
ENGINE INSTALLATION 10-14

NOTE:

- *The specifications and service data are the same as X-MODEL.*
- *Please refer to the sections 1 through 9 for details which are not given in this section.*

SPECIFICATIONS

DIMENSIONS AND DRY MASS

Overall length	2 070 mm (81.5 in)
Overall width	750 mm (29.5 in)
Overall height	1 060 mm (41.7 in)
Wheelbase	1 430 mm (56.3 in)
Ground clearnce	140 mm (5.5 in)
Seat height	805 mm (31.7 in)
Dry mass	165 kg (363 lbs)

ENGINE

Type	Four-stroke, Liquid-cooled, DOHC, TSCC, 90-degree V-twin
Number of cylinders	2
Tappet clearance, IN	0.10 – 0.20 mm (0.004 – 0.008 in)
EX	0.20 – 0.30 mm (0.008 – 0.012 in)
Bore	81.0 mm (3.189 in)
Stroke	62.6 mm (2.465 in)
Piston displacement	645 cm^3 (39.4 cu. in)
Compression ratio	11.5 : 1
Carburetor	MIKUNI BDSR39 × 2
Air cleaner	Non-woven fabric element
Starter system	Electric starter
Lubrication system	Wet sump

TRANSMISSION

Clutch	Wet multi-plate type
Transmission	6-speed constant, mesh
Gearshift pattern	1-down, 5-up
Primary reduction ratio	2.088 (71/34)
Gear ratios, Low	2.461 (32/13)
2nd	1.777 (32/18)
3rd	1.380 (29/21)
4th	1.125 (27/24)
5th	0.961 (25/26)
Top	0.851 (23/27)
Final reduction ratio	3.000 (45/15)
Drive chain	D.I.D 525 V8, 110 links

CHASSIS

Front suspension	Telescopic, coil spring, oil damped
Rear suspension	Link type system, gas/oil damped, coil spring
Front fork stroke	130 mm (5.1 in)
Rear wheel travel	125 mm (4.9 in)
Steering angle	33° (right & left)
Caster	25°
Trail	100 mm (3.94 in)
Turning radius	2.9 m (9.5 ft)
Front brake	Disc brake, twin hydraulically operated
Rear brake	Disc brake, hydraulically operated
Front tire size	120/60 ZR17 (55 W), tubeless
Rear tire size	160/60 ZR17 (69 W), tubeless

ELECTRICAL

Ignition type	Electronic ignition (Transistorized)
Ignition timing	5° B.T.D.C. at 1 300 r/min
Spark plug	NGK CR8E, DENSO U24ESR-N
Battery	12V 36.0 kC(10 Ah)/10HR
Generator	Three-phase A.C. Generator
Main fuse	30A
Fuse	15/15/15/10/10A
Headlight	12V 60/55W
Turn signal light	12V 21W
Brake light/Taillight	12V 21/5W × 2
License plate light	12V 5W
Speedometer light	12V 1.7W × 2
Neutral indicator light	12V 1.7W
High beam indicator light	12V 1.7W
Turn signal indicator light	12V 1.7W
Oil pressure indicator light	12V 1.7W

CAPACITIES

Fuel tank, including reserve	16.0 L (4.2/3.5 US/Imp gal)
	15.0 L (4.0/3.3 US/Imp gal) ..... Only for E-33
Engine oil, oil change	2 300 ml (2.4/2.0 US/Imp qt)
with filter change	2 400 ml (2.5/2.1 US/Imp qt)
overhaul	2 700 ml (2.9/2.4 US/Imp qt)
Coolant	1 600 ml (1.7/1.4 US/Imp qt)

These specifications are subject to change without notice.

SERVICE DATA

VALVE + GUIDE

Unit: mm (in)

ITEM	STD/SPEC.		LIMIT
Valve diam.	IN.	31 (1.2)	———
	EX.	25.5 (1.0)	———
Valve clearance (When cold)	IN.	0.1 – 0.2 (0.004 – 0.008)	———
	EX.	0.2 – 0.3 (0.008 – 0.012)	———
Valve guide to valve stem clearance	IN.	0.020 – 0.047 (0.0008 – 0.0019)	———
	EX.	0.030 – 0.057 (0.0012 – 0.0022)	———
Valve guide I.D.	IN. & EX.	4.500 – 4.512 (0.1772 – 0.1776)	———
Valve stem O.D.	IN.	4.465 – 4.480 (0.1758 – 0.1764)	———
	EX.	4.455 – 4.470 (0.1754 – 0.1760)	———
Valve stem deflection	IN. & EX.	———	0.35 (0.014)
Valve stem runout	IN. & EX.	———	0.05 (0.002)
Valve head thickness	IN. & EX.	———	0.5 (0.02)
Valve seat width	IN. & EX.	0.9 – 1.1 (0.035 – 0.043)	———
Valve head radial runout	IN. & EX.	———	0.03 (0.001)
Valve spring free length (IN. & EX.)	INNER	———	36.8 (1.45)
	OUTER	———	39.8 (1.57)
Valve spring tension (IN. & EX.)	INNER	4.2 – 4.8 kgf (9.26 – 10.58 lbs) at length 29.9 mm (1.18 in)	———
	OUTER	17.0 – 19.6 kg (37.48 – 43.21 lbs) at length 33.4 mm (1.31 in)	———

CAMSHAFT + CYLINDER HEAD

Unit: mm (in)

ITEM	STD/SPEC.		LIMIT
Cam height	IN.	35.480 – 35.530 (1.397 – 1.399)	35.18 (1.385)
	EX.	33.480 – 33.530 (1.318 – 1.320)	33.18 (1.306)
Camshaft journal oil clearance	IN. & EX.	0.032 – 0.066 (0.0013 – 0.0026)	0.150 (0.0059)
Camshaft journal holder I.D.	IN. & EX.	22.012 – 22.025 (0.8666 – 0.8671)	———
Camshaft journal O.D.	IN. & EX.	21.959 – 21.980 (0.8645 – 0.8654)	———
Camshaft runout	IN. & EX.	———	0.10 (0.004)
Cam chain pin (at arrow "3")	16th pin		———
Cylinder head distortion	———		0.05 (0.002)

CYLINDER + PISTON + PISTON RING

Unit: mm (in)

ITEM	STD/SPEC.		LIMIT
Compression pressure	1 500 kPa (15 kgf/cm² 213 psi)		1 100 kPa (11 kgf/cm² 156 psi)
Compression pressure difference	———		200 kPa (2 kgf/cm² 28 psi)
Piston to cylinder clearance	0.055 – 0.065 (0.0022 – 0.0026)		0.120 (0.0047)
Cylinder bore	81.000 – 81.015 (3.1890 – 3.1896)		81.075 (3.1919)
Piston diam.	80.940 – 80.955 (3.1866 – 3.1872) Measure at 20 mm (0.79 in) from the skirt end.		80.88 (3.184)
Cylinder distortion	———		0.05 (0.002)
Piston ring free end gap	1st	Approx. 9.9 (0.39)	7.9 (0.31)
	2nd	Approx. 10.5 (0.41)	8.4 (0.33)
Piston ring end gap	1st	0.20 – 0.35 (0.008 – 0.014)	0.70 (0.028)
	2nd	0.20 – 0.35 (0.008 – 0.014)	0.70 (0.028)
Piston ring to groove clearance	1st	———	0.180 (0.0071)
	2nd	———	0.150 (0.0059)
Piston ring groove width	1st	1.21 – 1.23 (0.0476 – 0.0484)	———
	2nd	1.01 – 1.03 (0.0398 – 0.0406)	———
	Oil	2.01 – 2.03 (0.0791 – 0.0799)	———

ITEM	STD/SPEC.		LIMIT
Piston ring thickness	1st	1.17 – 1.19 (0.0461 – 0.0469)	———
	2nd	0.97 – 0.99 (0.0382 – 0.0390)	———
Piston pin bore	20.002 – 20.008 (0.7875 – 0.7877)		20.030 (0.7886)
Piston pin O.D.	19.992 – 20.000 (0.7871 – 0.7874)		19.980 (0.7866)

CONROD + CRANKSHAFT

Unit: mm (in)

ITEM	STD/SPEC.	LIMIT
Conrod small end I.D.	20.010 – 20.018 (0.7878 – 0.7881)	20.040 (0.7890)
Conrod big end side clearance	0.170 – 0.320 (0.0067– 0.0126)	0.5 (0.02)
Conrod big end width	20.95 – 21.00 (0.825 – 0.827)	———
Crank pin width	42.17 – 42.22 (1.660 – 1.662)	———
Conrod big end oil clearance	0.032 – 0.056 (0.0013 – 0.0022)	0.080 (0.0031)
Crank pin O.D.	37.976 – 38.000 (1.4951 – 1.4960)	———
Crankshaft journal oil clearance	0.008 – 0.035 (0.0003 – 0.0014)	0.080 (0.0031)
Crankshaft journal O.D.	41.985 – 42.000 (1.6529 – 1.6535)	———
Crankshaft thrust bearing thickness	1.925 – 2.175 (0.0758 – 0.0856)	———
Crankshaft thrust clearance	0.050 – 0.110 (0.0020 – 0.0043)	———
Crankshaft runout	———	0.05 (0.002)

OIL PUMP

ITEM	STD/SPEC.	LIMIT
Oil pressure (at 60°C, 140°F)	Above 200 kPa (2.0 kgf/cm², 28 psi) Below 600 kPa (6.0 kgf/cm², 85 psi) at 3 000 r/min	———

CLUTCH

Unit: mm (in)

ITEM	STD/SPEC.		LIMIT
Clutch cable play	10 – 15 (0.4 – 0.6)		———
Clutch release screw	1/4 turn(s) back		———
Drive plate thickness	No.1	2.92 – 3.08 (0.115 – 0.121)	2.62 (0.103)
	No.2	3.42 – 3.58 (0.135 – 0.141)	3.12 (0.123)
Drive plate claw width	No.1 & No.2	15.9 – 16.0 (0.626 – 0.630)	15.1 (0.59)
Driven plate distortion	———		0.10 (0.004)
Clutch spring free length	58.9 (2.32)		56.0 (2.20)

TRANSMISSION + DRIVE CHAIN

Unit: mm (in)

ITEM	STD/SPEC.			LIMIT
Primary reduction ratio	2.088 (71/34)			———
Final reduction ratio	SV650S	2.933 (44/15)		———
	SV650	3.000 (45/15)		———
Gear ratios	Low	2.461 (32/13)		———
	2nd	1.777 (32/18)		———
	3rd	1.380 (29/21)		———
	4th	1.125 (27/24)		———
	5th	0.961 (25/26)		———
	Top	0.851 (23/27)		———
Shift fork to groove clearance	0.1 – 0.3 (0.004 – 0.012)			0.5 (0.020)
Shift fork groove width	5.5 – 5.6 (0.217 – 0.220)			———
Shift fork thickness	5.3 – 5.4 (0.209 – 0.213)			———
Drive chain	Type	DID525V8		———
	Links	SV650	110 Links	———
		SV650S	108 Links	———
	20-pitch length	———		319.4 (12.57)
Drive chain slack (on side-stand)	20 – 30 (0.79 – 1.18)			———
Gearshift lever height	SV650S	60 – 70 (2.4 – 2.8)		———
	SV650	55 – 60 (2.2 – 2.4)		———

THERMOSTAT + RADIATOR + FAN + COOLANT

ITEM	STD/SPEC.		LIMIT
Thermostat valve opening temperature	Approx. 82°C (179.6°F)		———
Thermostat valve lift	Over 8.0 mm (0.31 in) at 95°C (203°F)		———
Engine coolant temperature switch operating temperature	OFF → ON	Approx. 115°C (239°F)	———
	ON → OFF	Approx. 108°C (226.4°F)	———
Radiator cap valve opening pressure	95 – 125 kPa (0.95 – 1.25 kgf/cm², 13.5 – 17.8 psi)		———
Cooling fan thermo-switch operating temperature	OFF → ON	Approx. 96°C (204.8°F)	———
	ON → OFF	Approx. 91 °C (195.8°F)	———
Engine coolant type	Use an anti-freeze/coolant compatible with aluminum radiator, mixed with distilled water only, at the ratio of 50:50.		———
Engine coolant including reserve	Reserve tank side	Approx. 250 ml (0.26/0.22 US/Imp qt)	———
	Engine side	Approx. 1 350 ml (1.43/1.19 US/Imp qt)	———

CARBURETOR

ITEM	STD/SPEC.	
	E-02, 04, 17, 22, 24, 25, 34	E-03, 28
Carburetor type	MIKUNI BDSR39	←
Bore size	39 mm	←
I.D. No.	20F0	20F2
Idle r/min	1 300 ± 100 r/min	←
Fuel level	16.9 ± 0.5 mm (0.68 ± 0.02 in)	←
Float height	7.0 ± 0.5 mm (0.28 ± 0.02 in)	←
Main jet (M.J.)	#137.5	#137.5
Jet needle (J.N.)	6E38-54-2	6E42-52
Needle jet (N.J.)	P-0	P-0M
Throttle valve (Th.V.)	#95	←
Pilot jet (P.J.)	#17.5	#15
Pilot screw (P.S.)	PRE-SET (2½ turns back)	PRE-SET (3 turns back)
Throttle cable play	2.0 – 4.0 mm (0.08 – 0.16 in)	←

CARBURETOR

ITEM		STD/SPEC.	
		E-33	E-22 (U-Type)
Carburetor type		MIKUNI BDSR39	←
Bore size		39 mm	←
I.D. No.		20F4	20F5
Idle r/min		1 300 ± 100 r/min	←
Fuel level		16.9 ± 0.5 mm (0.68 ± 0.02 in)	←
Float height		7.0 ± 0.5 mm (0.28 ± 0.02 in)	←
Main jet	(M.J.)	#137.5	#137.5
Jet needle	(J.N.)	6E43-54	6E38-54-2
Needle jet	(N.J.)	P-0M	P-0
Throttle valve	(Th.V.)	#95	←
Pilot jet	(P.J.)	#15	#17.5
Pilot screw	(P.S.)	PRE-SET	PRE-SET (3½ turns back)
Throttle cable play		2.0 – 4.0 mm (0.08 – 0.16 in)	←

CARBURETOR

ITEM		STD/SPEC.
		E-18
Carburetor type		MIKUNI BDSR39
Bore size		39 mm
I.D. No.		20F3
Idle r/min		1 300 ± 50 r/min
Fuel level		16.9 ± 0.5 mm (0.68 ± 0.02 in)
Float height		7.0 ± 0.5 mm (0.28 ± 0.02 in)
Main jet	(M.J.)	#137.5
Jet needle	(J.N.)	6E38-54-2
Needle jet	(N.J.)	P-0
Throttle valve	(Th.V.)	#95
Pilot jet	(P.J.)	#15
Pilot screw	(P.S.)	PRE-SET (2¾ turns back)
Throttle cable play		2.0 – 4.0 mm (0.08 – 0.16 in)

ELECTRICAL

ITEM		STD/SPEC.		NOTE
Firing order		1 · 2		
Spark plug		Type	NGK: CR8E DENSO: U24ESR-N	
		Gap	0.7 – 0.8 mm (0.028 – 0.031 in)	
Spark performance		Over 8 mm (0.3 in) at 1 atm.		
Signal coil resistance		140 – 230 Ω		
Signal coil peak voltage		More than 3 V		
Ignition coil resistance		Primary	3.5 – 5.5 Ω	Terminal – Terminal
		Secondary	20 – 31 kΩ	Plug cap – Terminal
Ignition coil primary peak voltage		More than 150 V		
Generator coil resistance		0.2 – 0.55 Ω		
Generator Max. output		Approx. 300 W at 5 000 r/min		
Generator no-load voltage (When cold)		More than 70 V (AC) at 5 000 r/min		
Regulated voltage		13.5 – 15.0 V at 5 000 r/min		
Starter relay resistance		3 – 6 Ω		
Battery	Type designation	YT12A-BS		
	Capacity	12 V 36.0 kC (10Ah)/10HR		
Fuse size		Headlight	HI 15A	
			LO 15A	
		Signal	15A	
		Ignition	10A	
		Meter	10A	
		Main	30A	

WATTAGE

ITEM		STD/SPEC.			
		SV650S		SV650	
		E-02, 03, 24, 28, 33	The other countries	E-03, 24, 28, 33	The other countries
Headlight	HI	45 W × 2	55 W	60 W	←
	LO	45 W × 2	55 W	55 W	←
Parking or position light		5 W	←		5 W
Brake light/Taillight		21/5 W × 2	←	←	←
Turn signal light		21 W	←	←	←
License light		5 W	←	←	←
Speedometer light		0.84 W × 3	←	1.7 W × 2	←
Turn signal indicator light		3 W	←	1.7 W	←
High beam indicator light		1.7 W	←	←	←
Neutral indicator light		1.7 W	←	←	←
Oil pressure indicator light		1.7 W	←	←	←

BRAKE + WHEEL

Unit: mm (in)

ITEM		STD/SPEC.	LIMIT
Rear brake pedal free travel		20 – 30 (0.8 – 1.2)	———
Rear brake pedal height		55 – 65 (2.17 – 2.56)	———
Brake disc thickness	Front	4.5 (0.18)	4.0 (0.16)
	Rear	5.0 (0.20)	4.5 (0.18)
Brake disc runout		———	0.3 (0.012)
Master cylinder bore	Front	15.870 – 15.913 (0.6248 – 0.6265)	———
	Rear	12.700 – 12.743 (0.5000 – 0.5017)	———
Master cylinder piston diam.	Front	15.827 – 15.854 (0.6231 – 0.6242)	———
	Rear	12.657 – 12.684 (0.4983 – 0.4994)	———
Brake caliper cylinder bore	Front	30.230 – 30.306 (1.1902 – 1.1931)	———
	Rear	38.180 – 38.256 (1.5031 – 1.5061)	———
Brake caliper piston diam.	Front	30.150 – 30.200 (1.1870 – 1.1890)	———
	Rear	38.098 – 38.148 (1.4999 – 1.5019)	———
Brake fluid type		DOT 4	
Wheel rim runout	Axial	———	2.0 (0.08)
	Radial	———	2.0 (0.08)
Wheel rim size	Front	17 × MT3.50	———
	Rear	17 × MT4.50	———
Wheel axle runout	Front	———	0.25 (0.010)
	Rear	———	0.25 (0.010)

TIRE

Unit: mm (in)

ITEM	STD/SPEC.		LIMIT
Cold inflation tire pressure (Solo riding)	Front	225 kPa (2.25 kgf/cm², 33 psi)	———
	Rear	250 kPa (2.50 kgf/cm², 36 psi)	———
Cold inflation tire pressure (Dual riding)	Front	225 kPa (2.25 kgf/cm², 33 psi)	———
	Rear	250 kPa (2.50 kgf/cm², 36 psi)	———
Tire size	Front	120/60ZR17 (55W)	———
	Rear	160/60ZR17 (69W)	———
Tire type	Front	METZELER: MEZ4 FRONT	———
	Rear	METZELER: MEZ4	———
Tire tread depth	Front	———	1.6 (0.06)
	Rear	———	2.0 (0.08)

SUSPENSION

Unit: mm (in)

ITEM	STD/SPEC.		LIMIT
Front fork stroke	130 (5.1)		———
Front fork spring free length	314.6 (12.39)		308 (12.13)
Front fork oil level (without spring, inner tube fully compressed)	E-03, 33	102 (4.02)	———
	Others	104 (4.09)	———
Front fork oil type	SUZUKI FORK OIL G10 (#10) or equivalent fork oil		———
Front fork oil capacity (each leg)	E-03, 33	491 ml (16.6/17.3 US/Imp oz)	———
	Others	489 ml (16.5/17.2 US/Imp oz)	———
Rear shock absorber spring adjuster	SV650S	4/7	———
	SV650	2/7	———
Rear wheel travel	125 (4.9)		———
Swingarm pivot shaft runout	———		0.3 (0.01)

FUEL + OIL

ITEM	STD/SPEC.		NOTE
Fuel type	Use only unleaded gasoline of at least 87 pump octane ($\frac{R+M}{2}$) or 91 octane or higher rated by the research method. Gasoline containing MTBE (Methyl Tertiary Butyl Ether), less than 10% ethanol, or less than 5% methanol with appropriate cosolvents and corrosion inhibitor is permissible.		E-03, 33
	Use only unleaded gasoline of at least 87 pump octane ($\frac{R+M}{2}$) or 91 octane or higher rated by the research method.		E-28
	Gasoline used should be graded 91 octane or higher. An unleaded gasoline is recommended.		The others
Fuel tank capacity	15 L (4.0/3.3 US/Imp gal)		E-33
	16 L (4.2/3.5 US/Imp gal)		The others
Engine oil type	SAE 10W/40, API SF or SG		
Engine oil capacity	Change	2 300 ml (2.4/2.0 US/Imp qt)	
	Filter change	2 400 ml (2.5/2.1US/Imp qt)	
	Overhaul	3 000 ml (3.2/2.6 US/Imp qt)	

ENGINE INSTALLATION

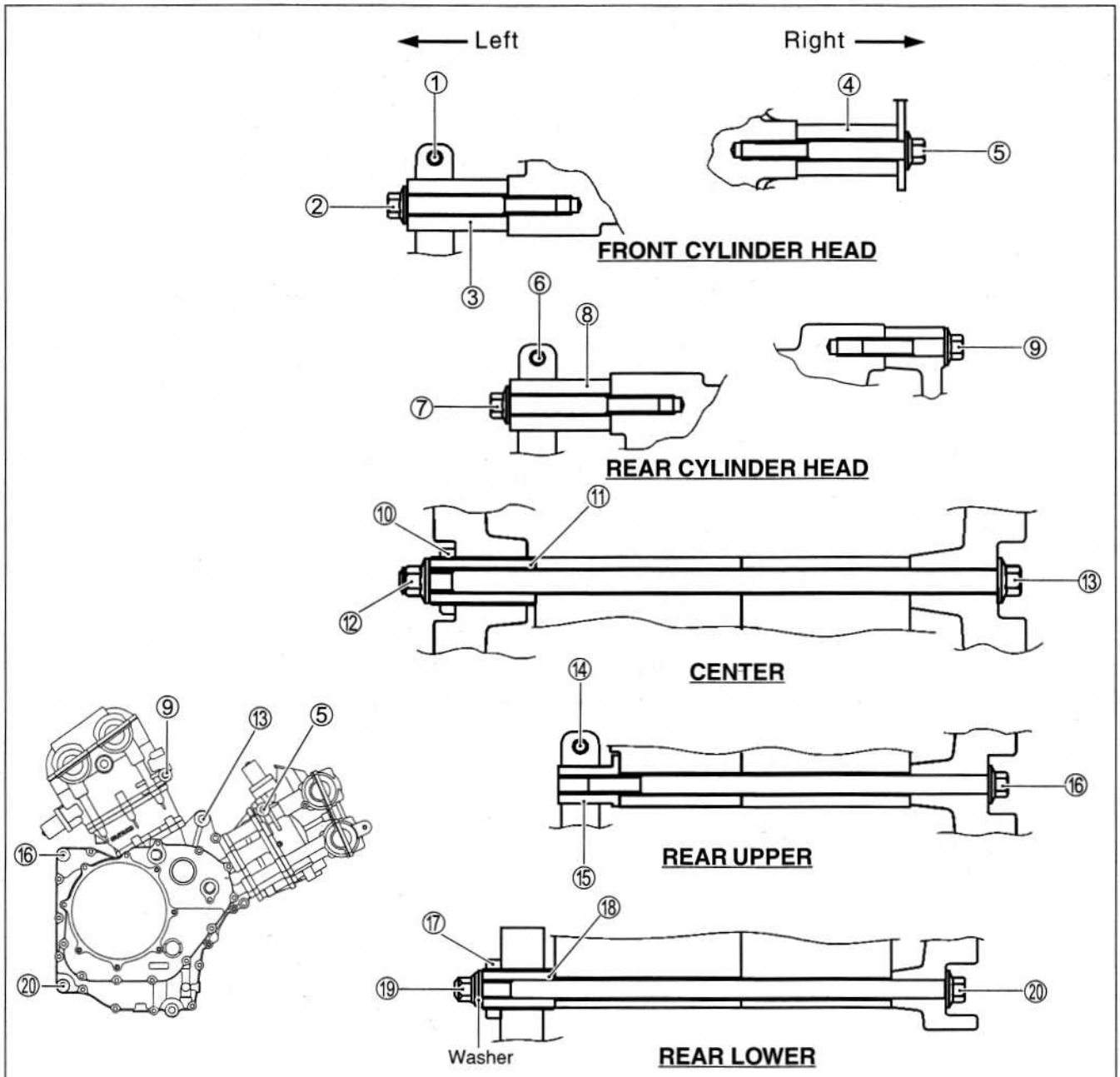

ITEM	N·m	kgf·m	lb-ft
① ⑥ ⑭	23	2.3	16.5
②⑤⑦⑨⑯⑲	55	5.5	40.0
⑩	45	4.5	32.5
⑪	10	1.0	7.3
⑫	93	9.3	67.5
⑰	45	4.5	32.5
⑱	10	1.0	7.3

LENGTH

ITEM		mm	in
Bolt	①⑥⑭	30	1.18
	②⑤⑦	80	3.15
	⑨	55	2.17
	⑬	310	12.20
	⑯	215	8.46
	⑳	265	10.43
Spacer	③④⑧	54	2.13
	⑮	33	1.30
Adjuster	⑪	57	2.24
	⑱	39	1.54

SV650K1 ('01-MODEL)

This chapter describes service data, service specifications and servicing procedures which differ from those of the SV650 Y ('00-model).

CONTENTS

SPECIFICATIONS 11- 2
SERVICE DATA 11- 3
WIRING DIAGRAM 11-13
WIRE HARNESS ROUTING 11-15
PRIMARY DRIVEN GEAR CONSTRUCTION 11-17

NOTE:
The specifications and service data are the same as Y-MODEL.

SPECIFICATIONS

DIMENSIONS AND DRY MASS

Overall length	2 120 mm (83.5 in) E-17, 18
	2 070 mm (81.5 in) ..... Others
Overall width	750 mm (29.5 in)
Overall height	1 060 mm (41.7 in)
Wheelbase	1 430 mm (56.3 in)
Ground clearance	140 mm (5.5 in)
Seat height	805 mm (31.7 in)
Dry mass	165 kg (363 lbs)

ENGINE

Type	4-stroke, liquid-cooled, DOHC, TSCC, 90°-degree V-twin
Number of cylinders	2
Bore	81.0 mm (3.189 in)
Stroke	62.6 mm (2.465 in)
Piston displacement	645 cm^3 (39.4 cu. in)
Compression ratio	11.5 : 1
Carburetor	MIKUNI BDSR39, twin
Air cleaner	Non-woven fabric element
Starter system	Electric
Lubrication system	Wet sump

TRANSMISSION

Clutch	Wet multi-plate type
Transmission	6-speed constant mesh
Gearshift pattern	1-down, 5-up
Primary reduction ratio	2.088 (71/34)
Final reduction ratio	3.000 (45/15)
Gear ratios, Low	2.461 (32/13)
2nd	1.777 (32/18)
3rd	1.380 (29/21)
4th	1.125 (27/24)
5th	0.961 (25/26)
Top	0.851 (23/27)
Drive chain	DID525V8, 110 links

CHASSIS

Front suspension	Telescopic, coil spring, oil damped
Rear suspension	Link type, coil spring, gas/oil damped, spring pre-load 7-way adjustable
Front fork stroke	130 mm (5.1 in)
Rear wheel travel	125 mm (4.9 in)
Caster	25°
Trail	100 mm (3.94 in)
Steering angle	33° (right & left)
Turning radius	2.9 m (9.5 ft)
Front brake	Disk brake
Rear brake	Disk brake
Front tire size	120/60 ZR17 (55W), tubeless
Rear tire size	160/60 ZR17 (69W), tubeless

ELECTRICAL

Ignition type	Electronic ignition (Transistorized)
Ignition timing	5° B.T.D.C. at 1 300 r/min
Spark plug	NGK CR8E or DENSO U24ESR-N
Battery	12V 36.0 kC (10Ah)/10 HR
Generator	Three-phase A.C. generator
Main fuse	30A
Fuse	15/15/15/10/10A
Headlight	12V 60/55W
Position/parking light	12V 5W ..... Except E-03, 33
Brake light/Taillight	12V 21/5W×2
License plate light	12V 5W
Turn signal light	12V 21W
Speedometer light	12V 1.7W×2
Turn signal indicator light	12V 1.7W
Neutral indicator light	12V 1.7W
High beam indicator light	12V 1.7W
Oil pressure indicator light	LED
Fuel indicator light	12V 1.7W
Water temp. indicator light	LED

CAPACITIES

Fuel tank, including reserve	15 L (4.0/3.3 US/Imp gal) E-33
	16 L (4.2/3.5 US/Imp gal) ..... Others
Engine oil, oil change	2 300 ml (2.4/2.0 US/Imp qt)
with filter change	2 400 ml (2.5/2.1 US/Imp qt)
overhaul	2 700 ml (2.9/2.4 US/Imp qt)
Coolant	1.6 L (1.7/1.4 US/Imp qt)
Front fork oil (each leg)	491 ml (16.6/17.3 US/Imp oz) E-03, 33
	489 ml (16.5/17.2 US/Imp oz) ..... Others

SERVICE DATA

VALVE + GUIDE

Unit: mm (in)

ITEM		STD/SPEC.	LIMIT
Valve diam.	IN.	31 (1.2)	———
	EX.	25.5 (1.0)	———
Valve clearance (When cold)	IN.	0.1 – 0.2 (0.004 – 0.008)	———
	EX.	0.2 – 0.3 (0.008 – 0.012)	———
Valve guide to valve stem clearance	IN.	0.020 – 0.047 (0.0008 – 0.0019)	———
	EX.	0.030 – 0.057 (0.0012 – 0.0022)	———
Valve guide I.D.	IN. & EX.	4.500 – 4.512 (0.1772 – 0.1776)	———
Valve stem O.D.	IN.	4.465 – 4.480 (0.1758 – 0.1764)	———
	EX.	4.455 – 4.470 (0.1754 – 0.1760)	———
Valve stem deflection	IN. & EX.	———	0.35 (0.014)
Valve stem runout	IN. & EX.	———	0.05 (0.002)
Valve head thickness	IN. & EX.	———	0.5 (0.02)
Valve seat width	IN. & EX.	0.9 – 1.1 (0.035 – 0.043)	———
Valve head radial runout	IN. & EX.	———	0.03 (0.001)
Valve spring free length (IN. & EX.)	INNER	———	36.8 (1.45)
	OUTER	———	39.8 (1.57)
Valve spring tension (IN. & EX.)	INNER	4.2 – 4.8 kgf (9.26 – 10.58 lbs) at length 29.9 mm (1.18 in)	———
	OUTER	17.0 – 19.6 kg (37.48 – 43.21 lbs) at length 33.4 mm (1.31 in)	———

CAMSHAFT + CYLINDER HEAD

Unit: mm (in)

ITEM	STD/SPEC.		LIMIT
Cam height	IN.	35.480 – 35.530 (1.397 – 1.399)	35.18 (1.385)
	EX.	33.480 – 33.530 (1.318 – 1.320)	33.18 (1.306)
Camshaft journal oil clearance	IN. & EX.	0.032 – 0.066 (0.0013 – 0.0026)	0.150 (0.0059)
Camshaft journal holder I.D.	IN. & EX.	22.012 – 22.025 (0.8666 – 0.8671)	———
Camshaft journal O.D.	IN. & EX.	21.959 – 21.980 (0.8645 – 0.8654)	———
Camshaft runout	IN. & EX.	———	0.10 (0.004)
Cam chain pin (at arrow "3")	16th pin		———
Cylinder head distortion	———		0.05 (0.002)

CYLINDER + PISTON + PISTON RING

Unit: mm (in)

ITEM	STD/SPEC.		LIMIT
Compression pressure	1 500 kPa (15 kgf/cm² 213 psi)		1 100 kPa (11 kgf/cm² 156 psi)
Compression pressure difference	———		200 kPa (2 kgf/cm² 28 psi)
Piston to cylinder clearance	0.055 – 0.065 (0.0022 – 0.0026)		0.120 (0.0047)
Cylinder bore	81.000 – 81.015 (3.1890 – 3.1896)		81.075 (3.1919)
Piston diam.	80.940 – 80.955 (3.1866 – 3.1872) Measure at 20 mm (0.79 in) from the skirt end.		80.88 (3.184)
Cylinder distortion	———		0.05 (0.002)
Piston ring free end gap	1st	Approx. 9.9 (0.39)	7.9 (0.31)
	2nd	Approx. 10.5 (0.41)	8.4 (0.33)
Piston ring end gap	1st	0.20 – 0.35 (0.008 – 0.014)	0.70 (0.028)
	2nd	0.20 – 0.35 (0.008 – 0.014)	0.70 (0.028)
Piston ring to groove clearance	1st	———	0.180 (0.0071)
	2nd	———	0.150 (0.0059)
Piston ring groove width	1st	1.21 – 1.23 (0.0476 – 0.0484)	———
	2nd	1.01 – 1.03 (0.0398 – 0.0406)	———
	Oil	2.01 – 2.03 (0.0791 – 0.0799)	———

ITEM	STD/SPEC.		LIMIT
Piston ring thickness	1st	1.17 – 1.19 (0.0461 – 0.0469)	———
	2nd	0.97 – 0.99 (0.0382 – 0.0390)	———
Piston pin bore	20.002 – 20.008 (0.7875 – 0.7877)		20.030 (0.7886)
Piston pin O.D.	19.992 – 20.000 (0.7871 – 0.7874)		19.980 (0.7866)

CONROD + CRANKSHAFT

Unit: mm (in)

ITEM	STD/SPEC.	LIMIT
Conrod small end I.D.	20.010 – 20.018 (0.7878 – 0.7881)	20.040 (0.7890)
Conrod big end side clearance	0.170 – 0.320 (0.0067– 0.0126)	0.5 (0.02)
Conrod big end width	20.95 – 21.00 (0.825 – 0.827)	———
Crank pin width	42.17 – 42.22 (1.660 – 1.662)	———
Conrod big end oil clearance	0.032 – 0.056 (0.0013 – 0.0022)	0.080 (0.0031)
Crank pin O.D.	37.976 – 38.000 (1.4951 – 1.4960)	———
Crankshaft journal oil clearance	0.008 – 0.035 (0.0003 – 0.0014)	0.080 (0.0031)
Crankshaft journal O.D.	41.985 – 42.000 (1.6529 – 1.6535)	———
Crankshaft thrust bearing thickness	1.925 – 2.175 (0.0758 – 0.0856)	———
Crankshaft thrust clearance	0.050 – 0.110 (0.0020 – 0.0043)	———
Crankshaft runout	———	0.05 (0.002)

OIL PUMP

ITEM	STD/SPEC.	LIMIT
Oil pressure (at 60°C, 140°F)	Above 200 kPa (2.0 kgf/cm², 28 psi) Below 600 kPa (6.0 kgf/cm², 85 psi) at 3 000 r/min	———

CLUTCH

Unit: mm (in)

ITEM	STD/SPEC.		LIMIT
Clutch cable play	10 – 15 (0.4 – 0.6)		———
Clutch release screw	1/4 turn(s) back		———
Drive plate thickness	No.1	2.92 – 3.08 (0.115 – 0.121)	2.62 (0.103)
	No.2	3.42 – 3.58 (0.135 – 0.141)	3.12 (0.123)
Drive plate claw width	No.1 & No.2	15.9 – 16.0 (0.626 – 0.630)	15.1 (0.59)
Driven plate distortion	———		0.10 (0.004)
Clutch spring free length	58.9 (2.32)		56.0 (2.20)

TRANSMISSION + DRIVE CHAIN

Unit: mm (in)

ITEM	STD/SPEC.			LIMIT
Primary reduction ratio	2.088 (71/34)			———
Final reduction ratio	SV650	3.000 (45/15)		———
Gear ratios	Low	2.461 (32/13)		———
	2nd	1.777 (32/18)		———
	3rd	1.380 (29/21)		———
	4th	1.125 (27/24)		———
	5th	0.961 (25/26)		———
	Top	0.851 (23/27)		———
Shift fork to groove clearance	0.1 – 0.3 (0.004 – 0.012)			0.5 (0.020)
Shift fork groove width	5.5 – 5.6 (0.217 – 0.220)			———
Shift fork thickness	5.3 – 5.4 (0.209 – 0.213)			———
Drive chain	Type	SV650	DID525V8	———
	Links	SV650	110 Links	———
	20-pitch length	———		319.4 (12.57)
Drive chain slack (on side-stand)	20 – 30 (0.79 – 1.18)			———
Gearshift lever height	SV650	55 – 60 (2.2 – 2.4)		———

THERMOSTAT + RADIATOR + FAN + COOLANT

ITEM	STD/SPEC.		LIMIT
Thermostat valve opening temperature	Approx. 82°C (179.6°F)		———
Thermostat valve lift	Over 8.0 mm (0.31 in) at 95°C (203°F)		———
Engine coolant temperature switch operating temperature	OFF → ON	Approx. 115°C (239°F)	———
	ON → OFF	Approx. 108°C (226.4°F)	———
Radiator cap valve opening pressure	95 – 125 kPa (0.95 – 1.25 kgf/cm², 13.5 – 17.8 psi)		———
Cooling fan thermo-switch operating temperature	OFF → ON	Approx. 96°C (204.8°F)	———
	ON → OFF	Approx. 91 °C (195.8°F)	———
Engine coolant type	Use an anti-freeze/coolant compatible with aluminum radiator, mixed with distilled water only, at the ratio of 50:50.		———
Engine coolant including reserve	Reserve tank side	Approx. 250 ml (0.26/0.22 US/Imp qt)	———
	Engine side	Approx. 1 350 ml (1.43/1.19 US/Imp qt)	———

CARBURETOR

ITEM	STD/SPEC.	
	E-02, 04, 17, 22, 24, 25, 34	E-03, 28
Carburetor type	MIKUNI BDSR39	←
Bore size	39 mm	←
I.D. No.	20F0	20F2
Idle r/min	1 300 ± 100 r/min	←
Fuel level	16.9 ± 0.5 mm (0.68 ± 0.02 in)	←
Float height	7.0 ± 0.5 mm (0.28 ± 0.02 in)	←
Main jet (M.J.)	#137.5	#137.5
Jet needle (J.N.)	6E38-54-2	6E42-52
Needle jet (N.J.)	P-0	P-0M
Throttle valve (Th.V.)	#95	←
Pilot jet (P.J.)	#17.5	#15
Pilot screw (P.S.)	PRE-SET (2½ turns back)	PRE-SET (3 turns back)
Throttle cable play	2.0 – 4.0 mm (0.08 – 0.16 in)	←

CARBURETOR

ITEM		STD/SPEC.	
		E-33	E-22 (U-Type)
Carburetor type		MIKUNI BDSR39	←
Bore size		39 mm	←
I.D. No.		20F4	20F5
Idle r/min		1 300 ± 100 r/min	←
Fuel level		16.9 ± 0.5 mm (0.68 ± 0.02 in)	←
Float height		7.0 ± 0.5 mm (0.28 ± 0.02 in)	←
Main jet	(M.J.)	#137.5	#137.5
Jet needle	(J.N.)	6E43-54	6E38-54-2
Needle jet	(N.J.)	P-0M	P-0
Throttle valve	(Th.V.)	#95	←
Pilot jet	(P.J.)	#15	#17.5
Pilot screw	(P.S.)	PRE-SET	PRE-SET (3½ turns back)
Throttle cable play		2.0 – 4.0 mm (0.08 – 0.16 in)	←

CARBURETOR

ITEM		STD/SPEC.
		E-18
Carburetor type		MIKUNI BDSR39
Bore size		39 mm
I.D. No.		20F3
Idle r/min		1 300 ± 50 r/min
Fuel level		16.9 ± 0.5 mm (0.68 ± 0.02 in)
Float height		7.0 ± 0.5 mm (0.28 ± 0.02 in)
Main jet	(M.J.)	#137.5
Jet needle	(J.N.)	6E38-54-2
Needle jet	(N.J.)	P-0
Throttle valve	(Th.V.)	#95
Pilot jet	(P.J.)	#15
Pilot screw	(P.S.)	PRE-SET (2¾ turns back)
Throttle cable play		2.0 – 4.0 mm (0.08 – 0.16 in)

ELECTRICAL

ITEM		STD/SPEC.		NOTE
Firing order		1 · 2		
Spark plug		Type	NGK: CR8E DENSO: U24ESR-N	
		Gap	0.7 – 0.8 mm (0.028 – 0.031 in)	
Spark performance		Over 8 mm (0.3 in) at 1 atm.		
Signal coil resistance		140 – 230 Ω		
Signal coil peak voltage		More than 3 V		
Ignition coil resistance		Primary	3.5 – 5.5 Ω	Terminal – Terminal
		Secondary	20 – 31 kΩ	Plug cap – Terminal
Ignition coil primary peak voltage		More than 150 V		
Generator coil resistance		0.2 – 0.55 Ω		
Generator Max. output		Approx. 300 W at 5 000 r/min		
Generator no-load voltage (When cold)		More than 70 V (AC) at 5 000 r/min		
Regulated voltage		13.5 – 15.0 V at 5 000 r/min		
Starter relay resistance		3 – 6 Ω		
Battery	Type designation	YT12A-BS		
	Capacity	12 V 36.0 kC (10Ah)/10HR		
Fuse size		Headlight	HI 15A	
			LO 15A	
		Signal	15A	
		Ignition	10A	
		Meter	10A	
		Main	30A	

WATTAGE

ITEM		STD/SPEC.	
		SV650	
		E-03, 33	The other countries
Headlight	HI	60 W	←
	LO	55 W	←
Parking or position light			5 W
Brake light/Taillight		21/5 W × 2	←
Turn signal light		21 W	←
License light		5 W	←
Speedometer light		1.7 W × 2	←
Turn signal indicator light		1.7 W	←
High beam indicator light		1.7 W	←
Neutral indicator light		1.7 W	←
Oil pressure indicator light		LED	←
Water temp. indicator light		LED	←

BRAKE + WHEEL

Unit: mm (in)

ITEM	STD/SPEC.		LIMIT
Rear brake pedal free travel	20 – 30 (0.8 – 1.2)		———
Rear brake pedal height	55 – 65 (2.17 – 2.56)		———
Brake disc thickness	Front	4.5 (0.18)	4.0 (0.16)
	Rear	5.0 (0.20)	4.5 (0.18)
Brake disc runout	———		0.3 (0.012)
Master cylinder bore	Front	15.870 – 15.913 (0.6248 – 0.6265)	———
	Rear	12.700 – 12.743 (0.5000 – 0.5017)	———
Master cylinder piston diam.	Front	15.827 – 15.854 (0.6231 – 0.6242)	———
	Rear	12.657 – 12.684 (0.4983 – 0.4994)	———
Brake caliper cylinder bore	Front	30.230 – 30.306 (1.1902 – 1.1931)	———
	Rear	38.180 – 38.256 (1.5031 – 1.5061)	———
Brake caliper piston diam.	Front	30.150 – 30.200 (1.1870 – 1.1890)	———
	Rear	38.098 – 38.148 (1.4999 – 1.5019)	———
Brake fluid type	DOT 4		
Wheel rim runout	Axial	———	2.0 (0.08)
	Radial	———	2.0 (0.08)
Wheel rim size	Front	17 × MT3.50	———
	Rear	17 × MT4.50	———
Wheel axle runout	Front	———	0.25 (0.010)
	Rear	———	0.25 (0.010)

TIRE

Unit: mm (in)

ITEM	STD/SPEC.		LIMIT
Cold inflation tire pressure (Solo riding)	Front	225 kPa (2.25 kgf/cm², 33 psi)	———
	Rear	250 kPa (2.50 kgf/cm², 36 psi)	———
Cold inflation tire pressure (Dual riding)	Front	225 kPa (2.25 kgf/cm², 33 psi)	———
	Rear	250 kPa (2.50 kgf/cm², 36 psi)	———
Tire size	Front	120/60ZR17 (55W)	———
	Rear	160/60ZR17 (69W)	———
Tire type	Front	METZELER: MEZ4 FRONT	———
	Rear	METZELER: MEZ4	———
Tire tread depth	Front	———	1.6 (0.06)
	Rear	———	2.0 (0.08)

SUSPENSION

Unit: mm (in)

ITEM	STD/SPEC.		LIMIT
Front fork stroke	130 (5.1)		———
Front fork spring free length	314.6 (12.39)		308 (12.13)
Front fork oil level (without spring, inner tube fully compressed)	E-03, 33	102 (4.02)	———
	Others	104 (4.09)	———
Front fork oil type	SUZUKI FORK OIL G10 (#10) or equivalent fork oil		———
Front fork oil capacity (each leg)	E-03, 33	491 ml (16.6/17.3 US/Imp oz)	———
	Others	489 ml (16.5/17.2 US/Imp oz)	———
Rear shock absorber spring adjuster	SV650	2/7	———
Rear wheel travel	125 (4.9)		———
Swingarm pivot shaft runout	———		0.3 (0.01)

FUEL + OIL

ITEM	STD/SPEC.		NOTE
Fuel type	Use only unleaded gasoline of at least 87 pump octane ($\frac{R+M}{2}$) or 91 octane or higher rated by the research method. Gasoline containing MTBE (Methyl Tertiary Butyl Ether), less than 10% ethanol, or less than 5% methanol with appropriate cosolvents and corrosion inhibitor is permissible.		E-03, 28, 33
	Gasoline used should be graded 91 octane or higher. An unleaded gasoline is recommended.		The others
Fuel tank capacity	15 L (4.0/3.3 US/Imp gal)		E-33
	16 L (4.2/3.5 US/Imp gal)		The others
Engine oil type	SAE 10W/40, API SF or SG		
Engine oil capacity	Change	2 300 ml (2.4/2.0 US/Imp qt)	
	Filter change	2 400 ml (2.5/2.1US/Imp qt)	
	Overhaul	3 000 ml (3.2/2.6 US/Imp qt)	

WIRING DIAGRAM
FOR E-03, 33 MODELS

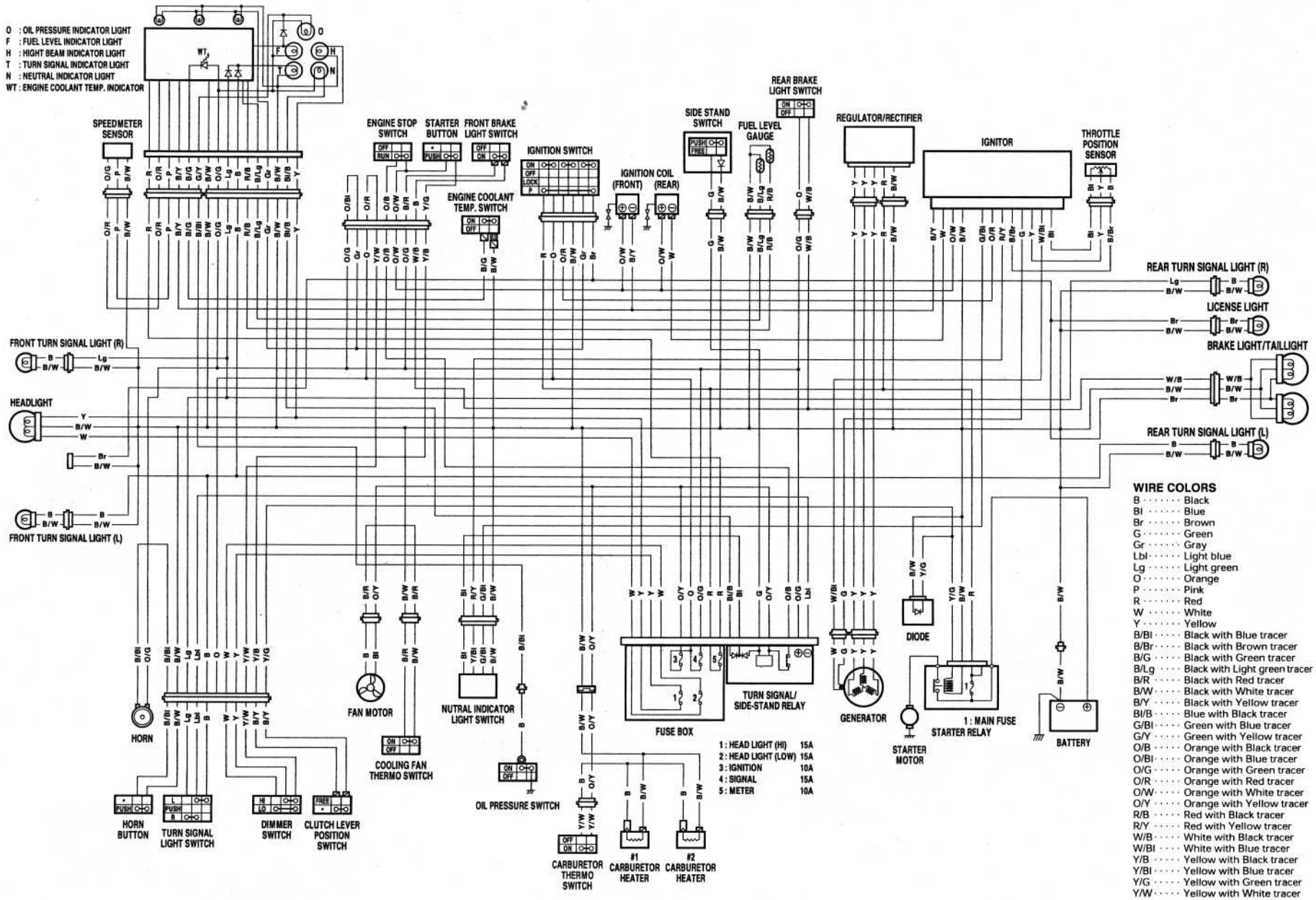

WIRE COLORS

- B ····· Black
- Bl ····· Blue
- Br ····· Brown
- G ····· Green
- Gr ····· Gray
- Lbl ····· Light blue
- Lg ····· Light green
- O ····· Orange
- P ····· Pink
- R ····· Red
- W ····· White
- Y ····· Yellow
- B/Bl ····· Black with Blue tracer
- B/Br ····· Black with Brown tracer
- B/G ····· Black with Green tracer
- B/Lg ····· Black with Light green tracer
- B/R ····· Black with Red tracer
- B/W ····· Black with White tracer
- B/Y ····· Black with Yellow tracer
- Bl/B ····· Blue with Black tracer
- G/Bl ····· Green with Blue tracer
- G/Y ····· Green with Yellow tracer
- O/B ····· Orange with Black tracer
- O/Bl ····· Orange with Blue tracer
- O/G ····· Orange with Green tracer
- O/R ····· Orange with Red tracer
- O/W ····· Orange with White tracer
- O/Y ····· Orange with Yellow tracer
- R/B ····· Red with Black tracer
- R/Y ····· Red with Yellow tracer
- W/B ····· White with Black tracer
- W/Bl ····· White with Blue tracer
- Y/B ····· Yellow with Black tracer
- Y/Bl ····· Yellow with Blue tracer
- Y/G ····· Yellow with Green tracer
- Y/W ····· Yellow with White tracer

FOR E-02, 04, 17, 18, 22, 25 AND 34 MODELS

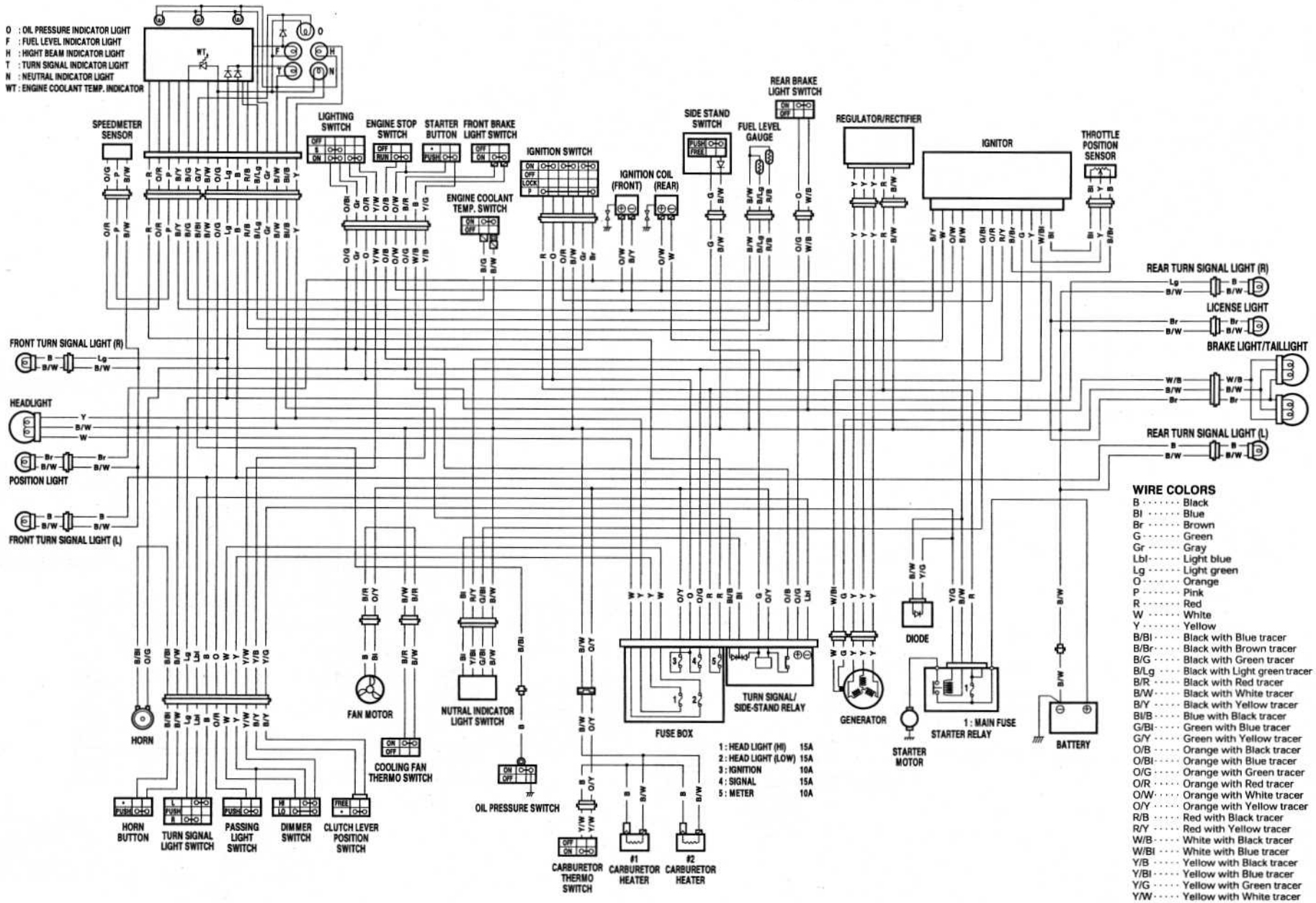

WIRE HARNESS ROUTING

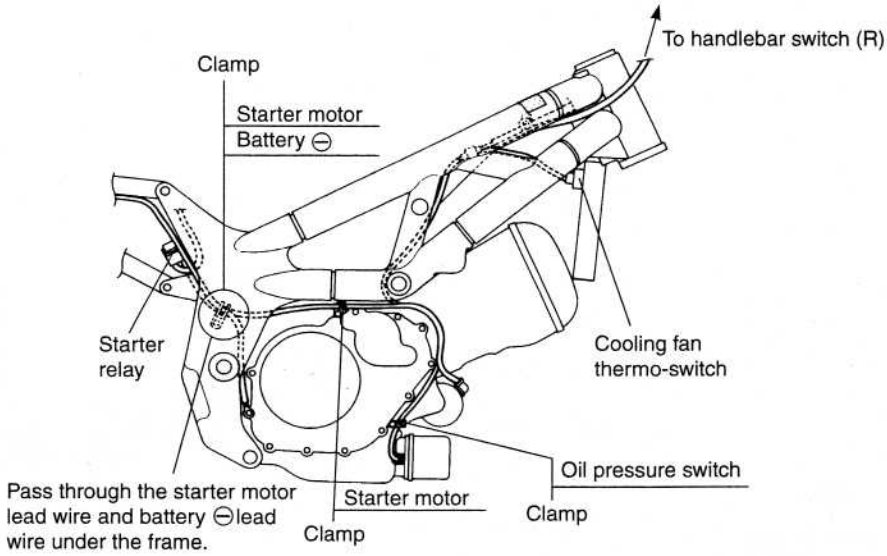

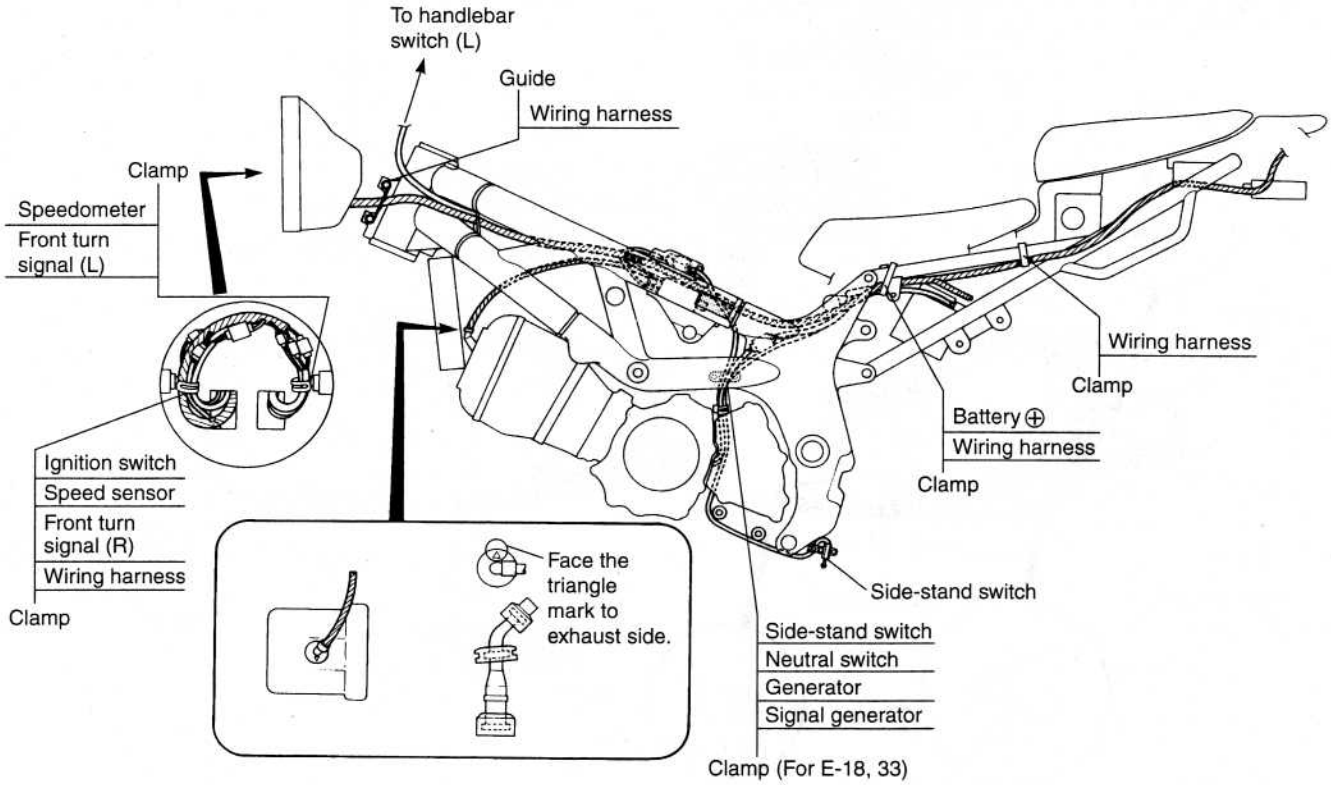

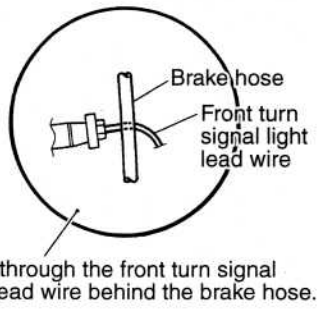

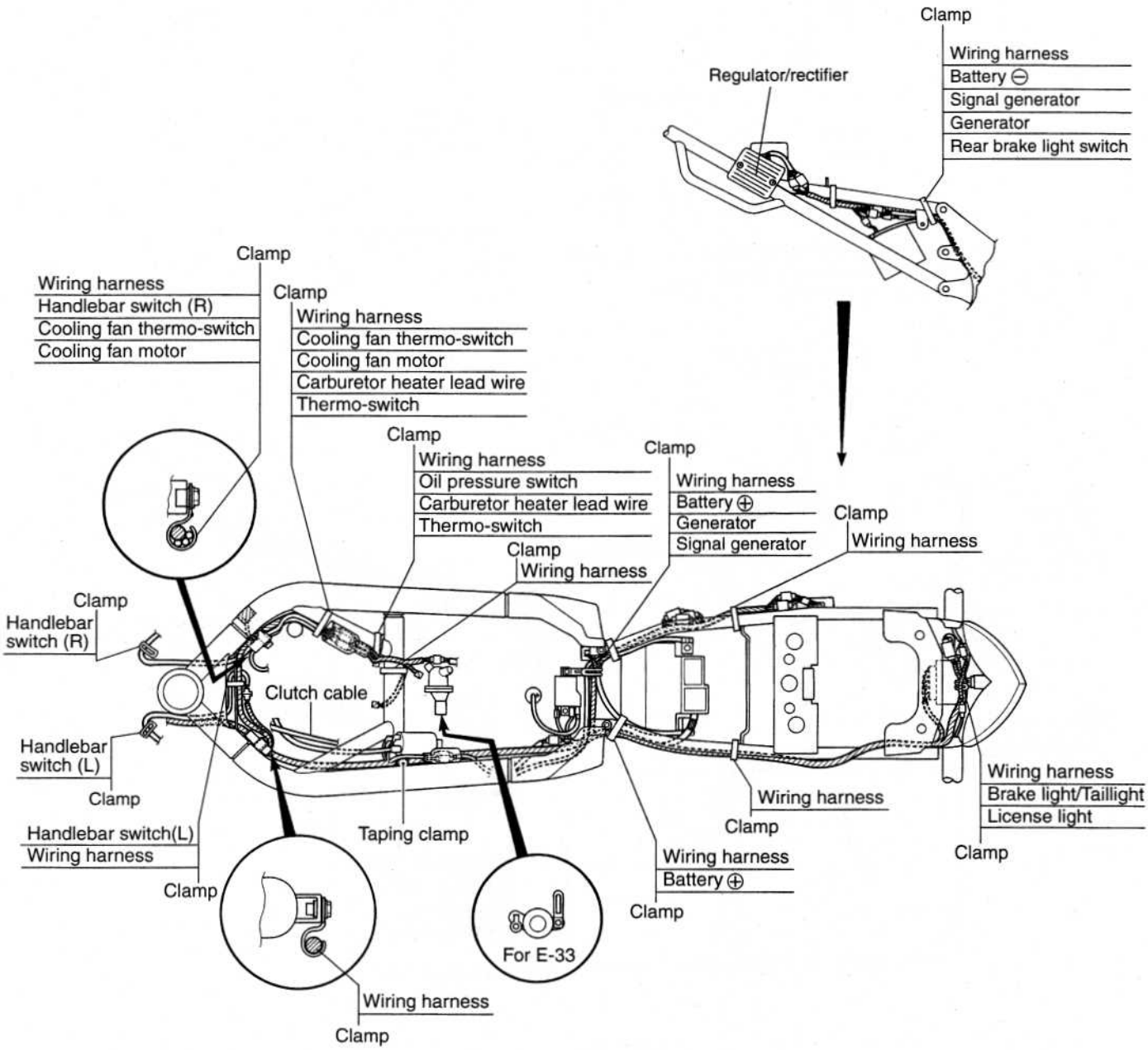
Clamp
Wiring harness
Battery ⊖
Signal generator
Generator
Rear brake light switch
Regulator/rectifier
Clamp
Wiring harness
Handlebar switch (R)
Cooling fan thermo-switch
Cooling fan motor
Clamp
Wiring harness
Cooling fan thermo-switch
Cooling fan motor
Carburetor heater lead wire
Thermo-switch
Clamp
Wiring harness
Oil pressure switch
Carburetor heater lead wire
Thermo-switch
Clamp
Wiring harness
Battery ⊕
Generator
Signal generator
Clamp
Wiring harness
Clamp
Wiring harness
Clamp
Handlebar switch (R)
Clutch cable
Handlebar switch (L)
Clamp
Handlebar switch(L)
Wiring harness
Clamp
Taping clamp
For E-33
Wiring harness
Clamp
Wiring harness
Battery ⊕
Clamp
Wiring harness
Clamp
Wiring harness
Brake light/Taillight
License light
Clamp

PRIMARY DRIVEN GEAR CONSTRUCTION

- The primary driven gear washer has been united to the spacer from SV650K1/SK1 ('01-model) as shown in the illustration.

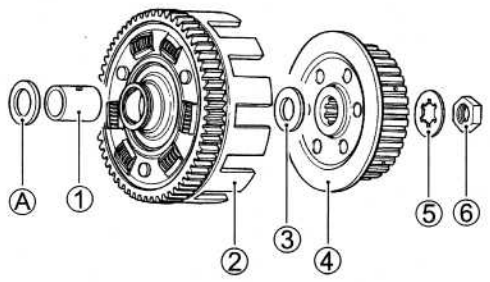

Ⓐ Washer
① Spacer
② Primary driven gear assembly
③ Washer
④ Clutch sleeve hub
⑤ Lock washer
⑥ Clutch sleeb hub nut

X, Y-MODELS

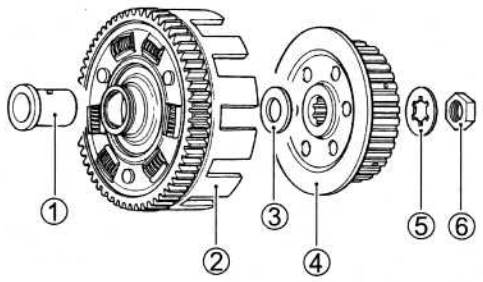

① Spacer
② Primary driven gear assembly
③ Washer
④ Clutch sleeve hub
⑤ Lock washer
⑥ Clutch sleeb hub nut

From K1-MODEL

SV650SK1 ('01-MODEL)

This manual describes service data, service specifications and servicing procedures which differ from those of the SV650K1 ('01-MODEL).

NOTE:
- *Any differences between the SV650K1 ('01-MODEL) and SV650SK1 ('01-MODEL) in specifications and service data are clearly indicated with an asterisk mark (*).*
- *Please refer to the SV650 Service Manual for details which are not given in this manual.*

CONTENTS

INFORMATION LABELS 2
SPECIFICATIONS 3
PERIODIC MAINTENANCE 5
  BRAKE 5
  CHASSIS BOLT AND NUT 6
EXTERIOR PARTS 8
  CONSTRUCTION 8
  COWLING 9
FRONT FORK 11
  REMOVAL 11
  REMOUNTING 12
STEERING 13
  CONSTRUCTION 13
  HANDLEBARS 14
  STEERING REMOVAL 17
  STEERING INSTALLATION 18
FRONT BRAKE 19
  CONSTRUCTION 19
  BRAKE FLUID REPLACEMENT 20
  FRONT MASTER CYLINDER 21
SPEEDOMETER 26
  REMOVAL 26
  CONSTRUCTION 27
  INSPECTION 27
HEADLIGHT 30
  BULB REPLACEMENT 30
WIRING DIAGRAM 31
WIRE HARNESS ROUTING 32
CABLE ROUTING 34
FRONT BRAKE HOSE ROUTING 35
COWLING AND SEAT TAIL COVER SET-UP 36
SERVICE DATA 37
PRIMARY DRIVEN GEAR CONSTRUCTION 47

INFORMATION LABELS

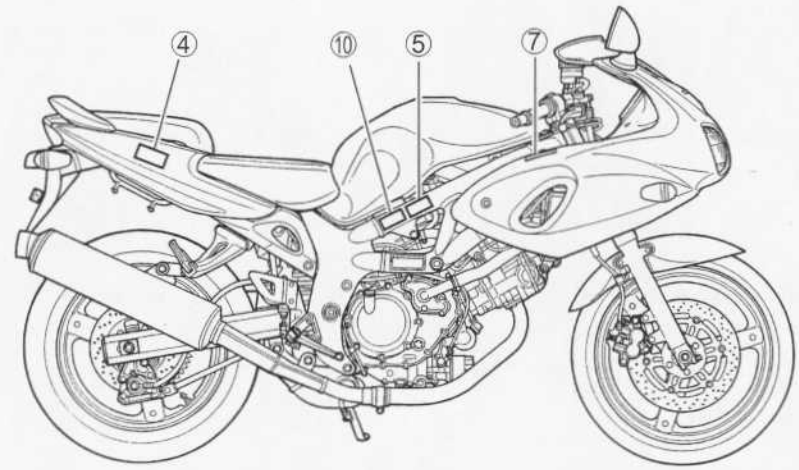

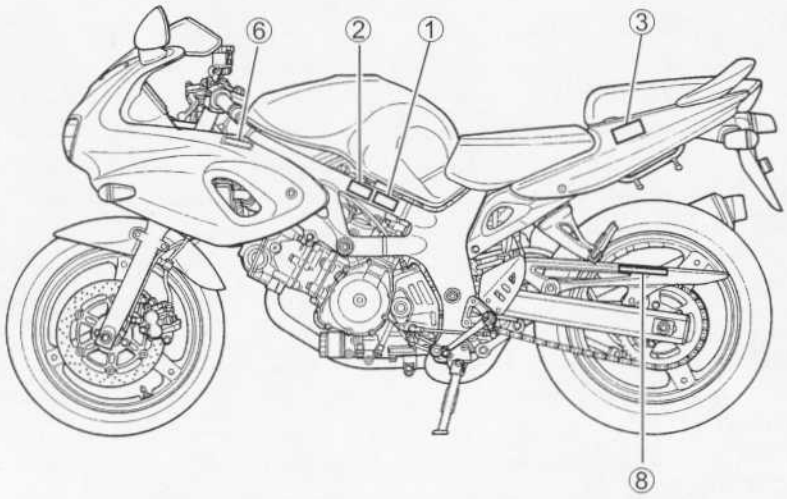

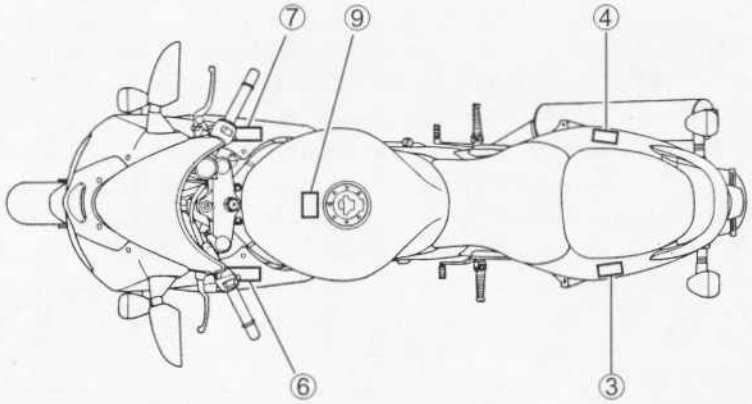

①	Noise label	⑥	Warning screen label
②	Information label	⑦	Warning steering label
③	Vacuum hose routing label (For E-33)	⑧	Tire pressure label
④	Manual notice label	⑨	Warning safety label
⑤	Frame caution plate	⑩	Safety plate

SPECIFICATIONS

DIMENSIONS AND DRY MASS

Overall length	*	2 045 mm (80.5 in)
Overall width	*	740 mm (29.1 in)
Overall height	*	1 130 mm (44.5 in)
Wheelbase	*	1 420 mm (55.9 in)
Ground clearnce		140 mm (5.5 in)
Seat height		805 mm (31.7 in)
Dry mass	*	169 kg (372 lbs)

ENGINE

Type	Four-stroke, Liquid-cooled, DOHC, TSCC, 90-degree V-twin
Number of cylinders	2
Tappet clearance, IN	0.10 – 0.20 mm (0.004 – 0.008 in)
EX	0.20 – 0.30 mm (0.008 – 0.012 in)
Bore	81.0 mm (3.189 in)
Stroke	62.6 mm (2.465 in)
Piston displacement	645 cm^3 (39.4 cu. in)
Compression ratio	11.5 : 1
Carburetor	MIKUNI BDSR39 × 2
Air cleaner	Non-woven fabric element
Starter system	Electric starter
Lubrication system	Wet sump

TRANSMISSION

Clutch		Wet multi-plate type
Transmission		6-speed constant, mesh
Gearshift pattern		1-down, 5-up
Primary reduction ratio		2.088 (71/34)
Gear ratios, Low		2.461 (32/13)
2nd		1.777 (32/18)
3rd		1.380 (29/21)
4th		1.125 (27/24)
5th		0.961 (25/26)
Top		0.851 (23/27)
Final reduction ratio	*	2.933 (44/15)
Drive chain	*	D.I.D 525 V9, 108 links

CHASSIS

Front suspension		Telescopic, coil spring, oil damped
Rear suspension		Link type system, gas/oil damped, coil spring
Front fork stroke		130 mm (5.1 in)
Rear wheel travel		125 mm (4.9 in)
Steering angle	*	30° (right & left)
Caster		25°
Trail		100 mm (3.94 in)
Turning radius	*	3.1 m (10.2 ft)
Front brake		Disc brake, twin hydraulically operated
Rear brake		Disc brake, hydraulically operated
Front tire size		120/60 ZR17 (55 W), tubeless
Rear tire size		160/60 ZR17 (69 W), tubeless

ELECTRICAL

Ignition type		Electronic ignition (Transistorized)
Ignition timing		5° B.T.D.C. at 1 300 r/min
Spark plug		NGK CR8E, DENSO U24ESR-N
Battery		12V 36.0 kC(10 Ah)/10HR
Generator		Three-phase A.C. Generator
Main fuse		30A
Fuse		15/15/15/10/10A
Headlight	*	12V 45/45W × 2
Turn signal light		12V 21W
Brake light/Taillight		12V 21/5W × 2
License plate light		12V 5W
Speedometer light	*	12V 0.84W × 3
Neutral indicator light		12V 1.7W
High beam indicator light		12V 1.7W
Turn signal indicator light	*	12V 3W
Oil pressure indicator light		12V 1.7W
Fuel level indicator light		12V 1.7W
Water temp. indicator light		LED

CAPACITIES

Fuel tank, including reserve	16.0 L (4.2/3.5 US/Imp gal)	E-03
	15.0 L (4.0/3.3 US/Imp gal)	E-33
Engine oil, oil change	2 300 ml (2.4/2.0 US/Imp qt)	
with filter change	2 400 ml (2.5/2.1 US/Imp qt)	
overhaul	2 700 ml (2.9/2.4 US/Imp qt)	
Coolant	1 600 ml (1.7/1.4 US/Imp qt)	

These specifications are subject to change without notice.

PERIODIC MAINTENANCE

BRAKE

(BRAKE)
Inspect initially at 1 000 km (600 miles, 1 month) and every 6 000 km (4 000 miles, 6 months) thereafter.

(BRAKE HOSE AND BRAKE FLUID)
Inspect every 6 000 km (4 000 miles, 6 months). Replace hoses every 4 years. Replace fluid every 2 years.

BRAKE FLUID LEVEL CHECK

- Keep the motorcycle upright and place the handlebars straight.
- Remove the rear seat. (☞ 6-3 of the SV650 Service Manual)
- Check the brake fluid level by observing the lower limit lines on the front and rear brake fluid reservoirs.
- When the level is below the lower limit line, replenish with brake fluid that meets the following specification.

Specification and Classification: DOT 4

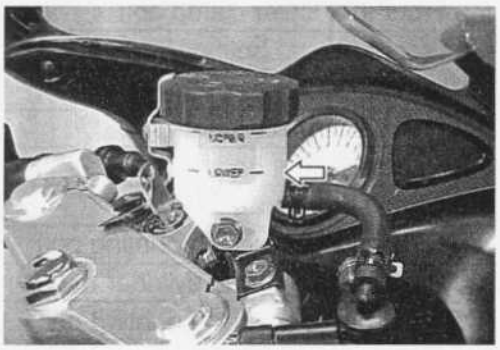

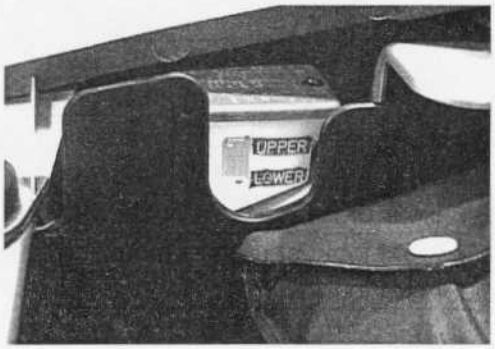

⚠ WARNING

- **The brake system of this motorcycle is filled with a glycol-based brake fluid. Do not use or mix different types of fluid such as silicone-based and petroleum-based fluids. Do not use any brake fluid taken from old, used or unsealed containers. Never re-use brake fluid left over from the last servicing or stored for a long period of time.**
- **Brake fluid, if it leaks, will interfere with safe running and immediately discolor painted surfaces. Check the brake hoses and hose joints for cracks and oil leakage before riding.**

CHASSIS BOLT AND NUT

Tighten initially at 1 000 km (600 miles, 1 month) and every 6 000 km (4 000 miles, 6 months) thereafter.

Check that all chassis bolts and nuts are tightened to their specified torque. (Refer to the next page for the locations of the following nuts and bolts on the motorcycle.)

Item	N·m	kgf·m	lb-ft
① Steering stem head nut	65	6.5	47.0
② Front fork upper clamp bolt	23	2.3	16.5
③ Front fork lower clamp bolt	23	2.3	16.5
④ Front fork cap bolt	23	2.3	16.5
⑤ Front axle	65	6.5	47.0
⑥ Front axle pinch bolt	23	2.3	16.5
⑦ Handlebar set bolt	10	1.0	7.0
⑧ Handlebar clamp bolt	23	2.3	16.5
⑨ Clutch lever holder mounting bolt	10	1.0	7.0
⑩ Front brake master cylinder mounting bolt	10	1.0	7.0
⑪ Front brake caliper mounting bolt	39	3.9	28.0
⑫ Brake hose union bolt	23	2.3	16.5
⑬ Air bleeder valve	7.5	0.75	5.5
⑭ Brake disc bolt (Front and Rear)	23	2.3	16.5
⑮ Rear brake caliper mounting bolt	26	2.6	19.0
⑯ Rear brake caliper housing bolt	30	3.0	21.5
⑰ Rear brake master cylinder mounting bolt	10	1.0	7.0
⑱ Rear brake master cylinder rod lock nut	18	1.8	13.0
⑲ Front footrest bracket mounting bolt	23	2.3	16.5
⑳ Front footrest bolt	39	3.9	28.0
㉑ Swingarm pivot shaft nut	100	10.0	72.5
㉒ Swingarm pivot shaft lock nut	90	9.0	65.0
㉓ Swingarm pivot shaft	15	1.5	11.0
㉔ Torque link nut (Front & Rear)	35	3.5	25.5
㉕ Rear shock absorber mounting nut	50	5.0	36.0
㉖ Rear shock absorber mounting bolt	50	5.0	36.0
㉗ Cushion lever mounting nut	78	7.8	56.5
㉘ Cushion rod mounting nut	78	7.8	56.5
㉙ Rear axle nut	65	6.5	47.0
㉚ Rear sprocket nut	60	6.0	43.5

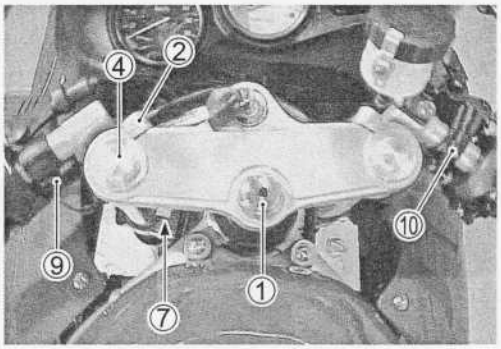
4
2
9
7
1
10

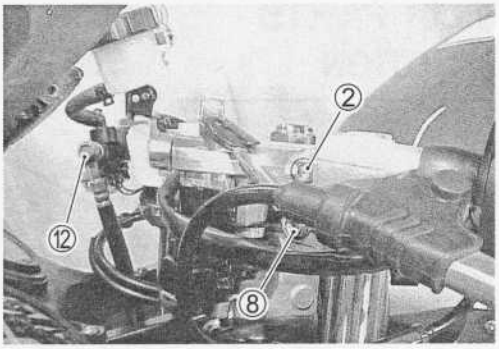
2
12
8

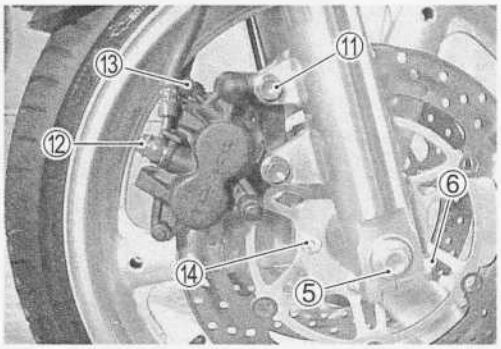
13
11
12
6
14
5

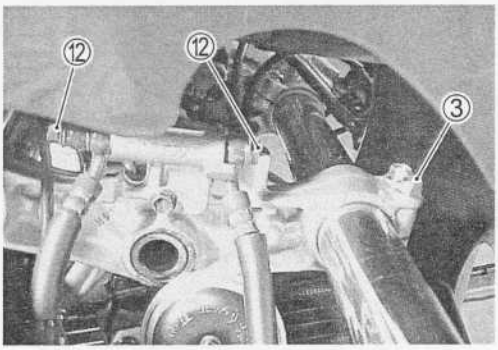
12
12
3

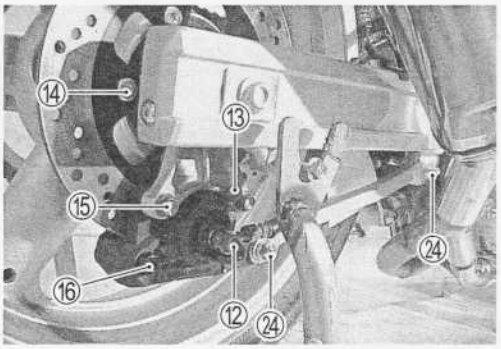
14
13
15
24
16
12
24

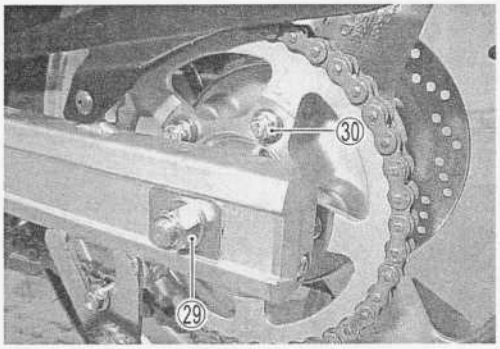
30
29

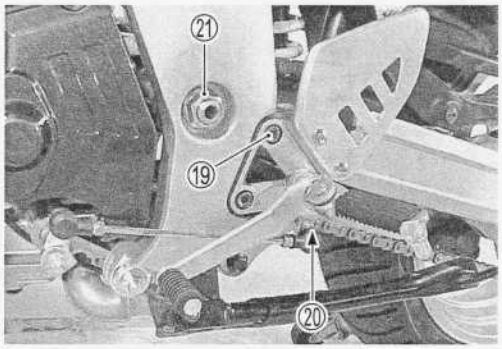
21
19
20

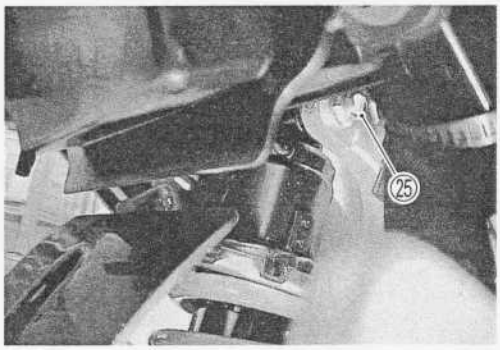
25

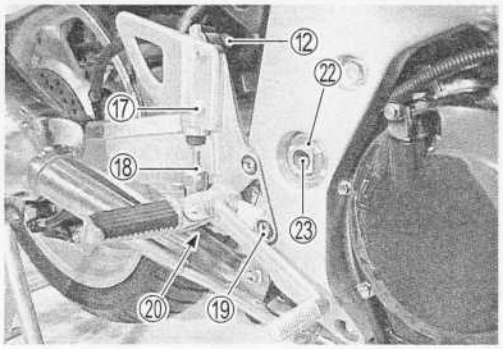
12
22
17
18
23
20
19

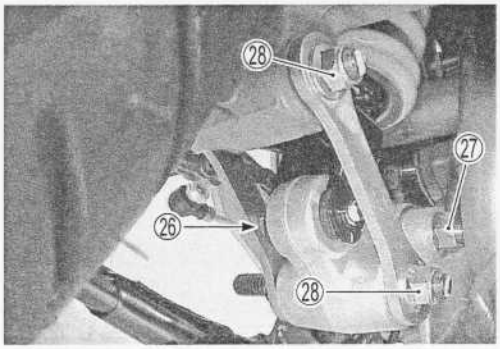
28
27
26
28

EXTERIOR PARTS
CONSTRUCTION

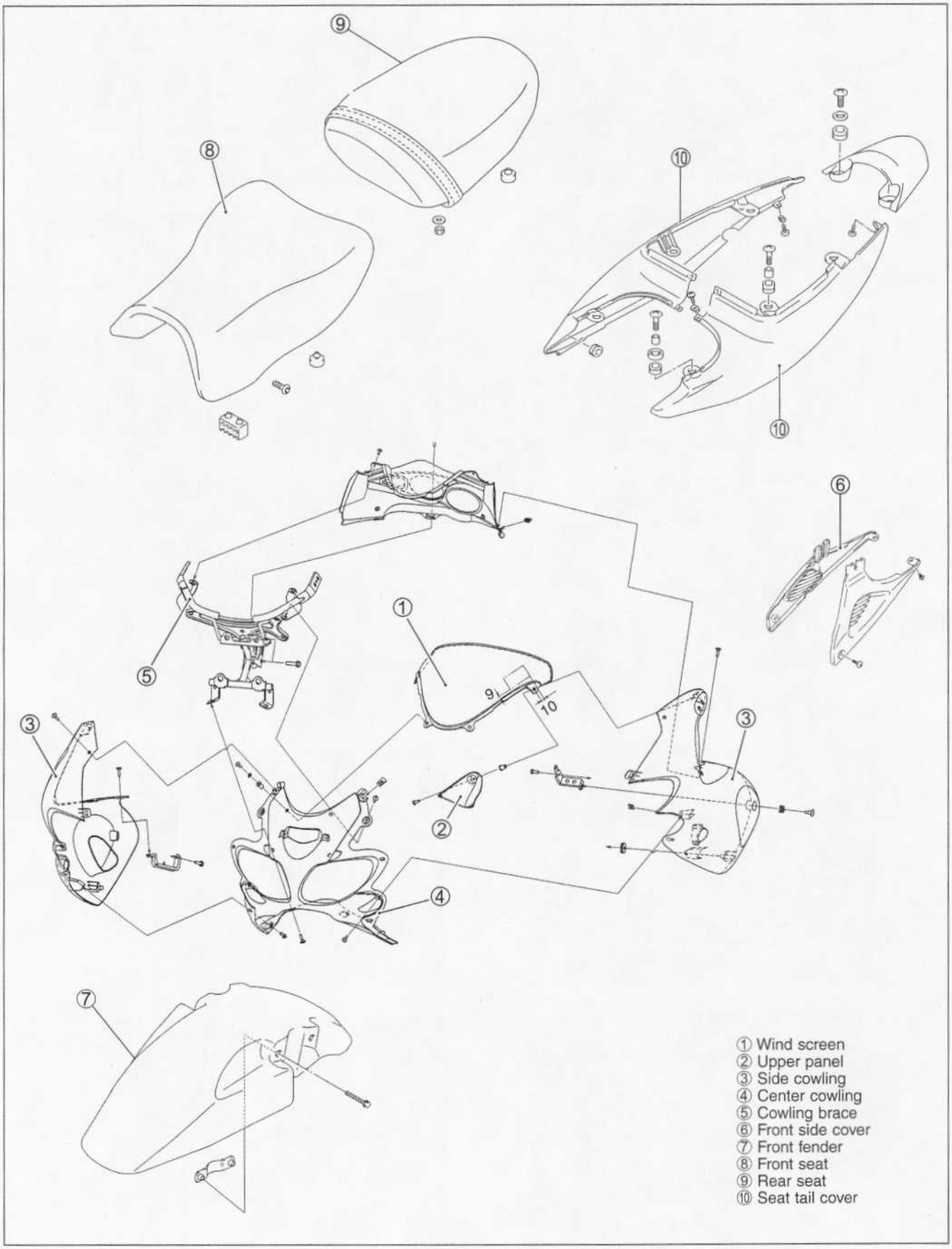

COWLING

- Remove the left and right upper panels.
- Remove the rear view mirrors.

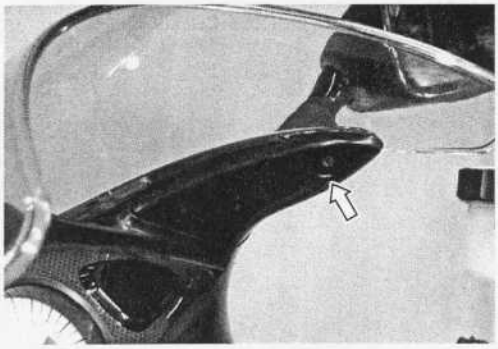

- Remove the wind screen.

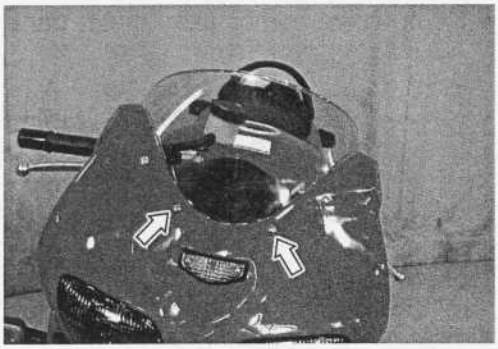

- Remove the left and right side cowling.
- Remove the turn signal lights.

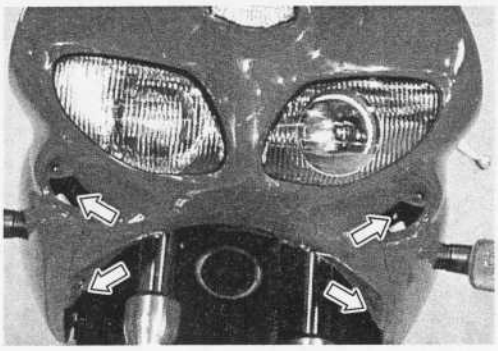

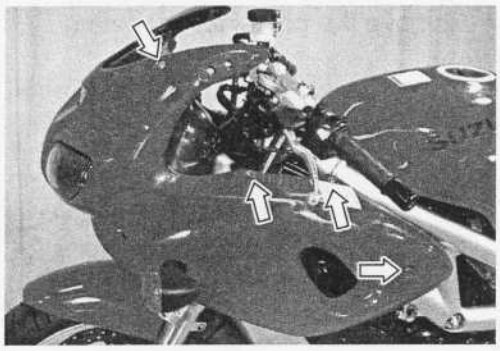

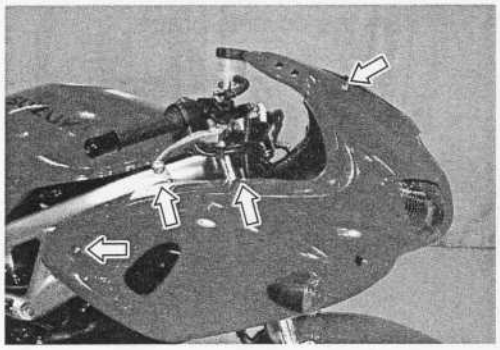

- Remove the center cowling.

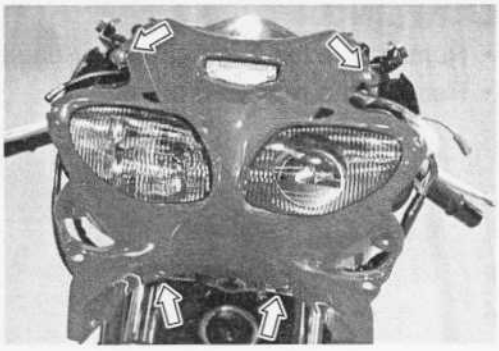

- Remove the combination meter panel.

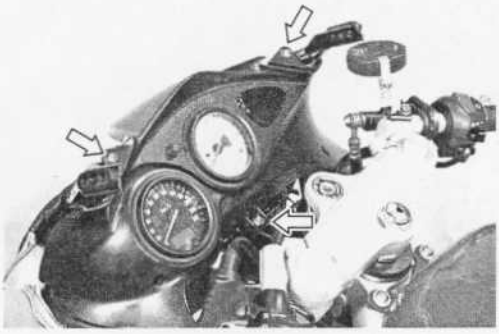

- Remove the headlight assembly.

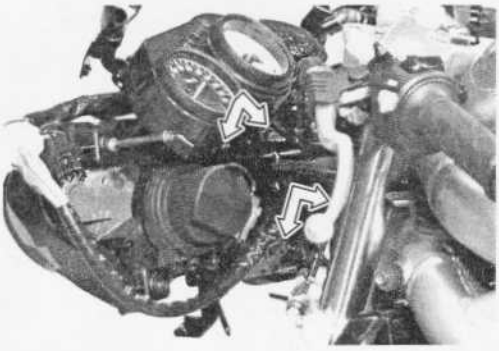

- Remove the combination meter.

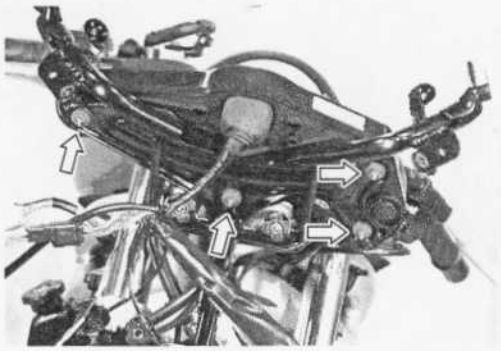

- Remove the cowling brace.

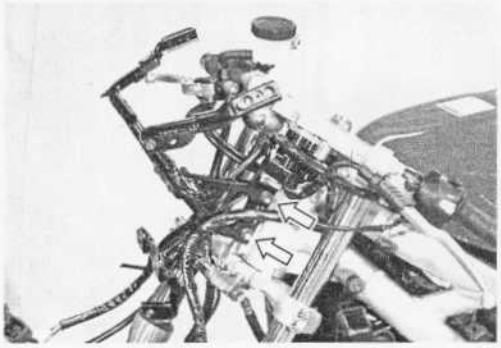

- Remount the cowling in the reverse order of removal.

FRONT FORK

REMOVAL

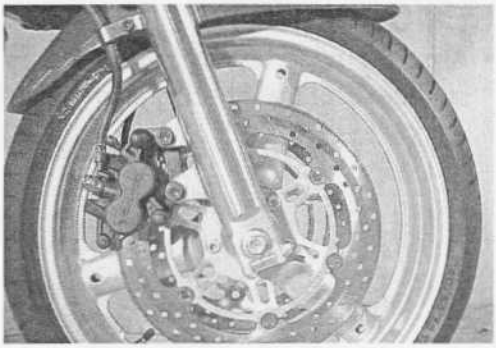

- Remove the brake hose clamp bolts and speed sensor clamp bolt.
- Remove the front brake calipers. (☞ 6-48 of the SV650 Service Manual)
- Remove the front wheel. (☞ 6-7 of the SV650 Service Manual)
- Remove the front fender. (☞ 6-3 of the SV650 Service Manual)
- Loosen the front fork upper clamp bolt ①.

NOTE:
Slightly loosen the front fork cap bolt before loosening the lower clamp bolts to facilitate later disassembly.

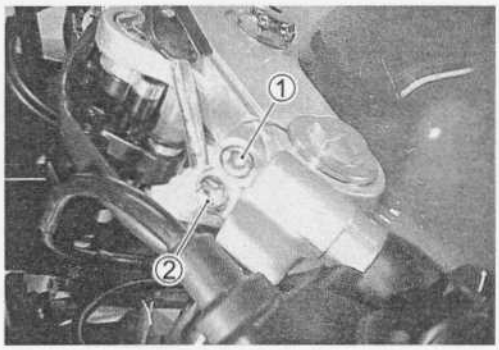

- Loosen the handlebar clamp bolt ②.

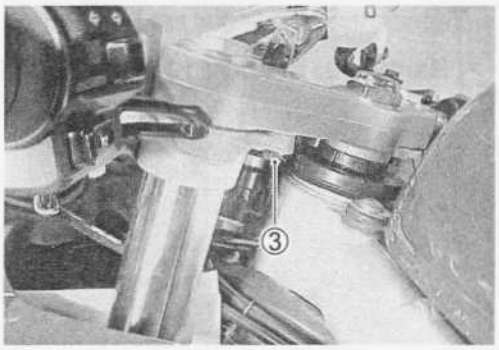

- Loosen the handlebar set bolt ③.

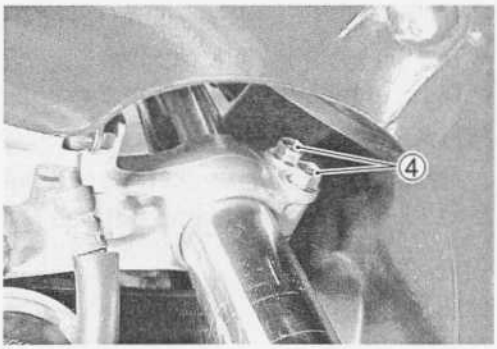

- Loosen the front fork lower clamp bolts ④.

NOTE:
Be careful not to drop the front fork when loosening the bolts.

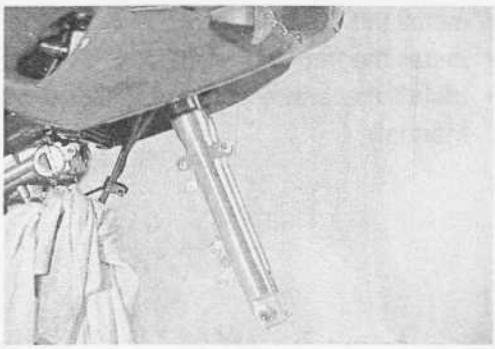

- Remove the front forks.

REMOUNTING

- Align the upper surface Ⓐ of the inner tube with the upper surface Ⓑ of the steering stem upper bracket.

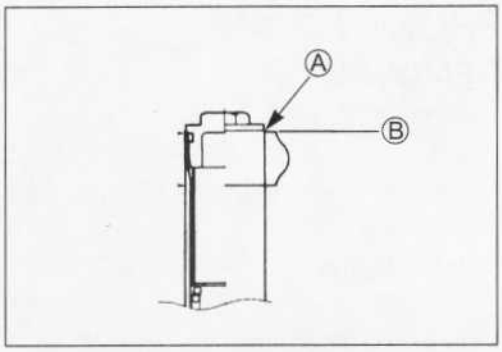

- Tighten the front fork lower clamp bolts ① to the specified torque.

Front fork lower clamp bolt: 23 N·m (2.3 kgf·m, 16.5 lb-ft)

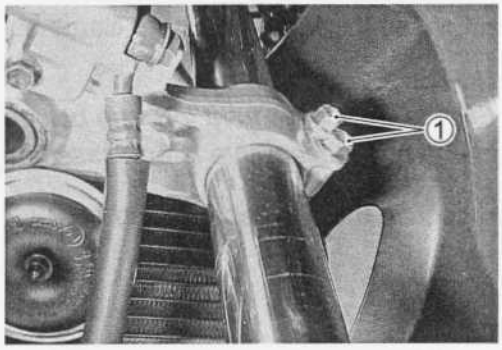

- Tighten the handlebar set bolt ② to the specified torque.

Handlebar set bot: 10 N·m (1.0 kgf·m, 7.0 lb-ft)

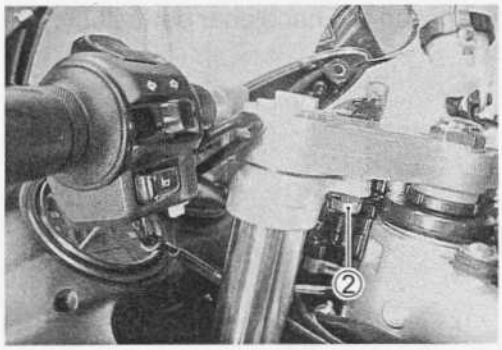

- Tighten the handlebar clamp bolt ③ to the specified torque.
- Tighten the front fork cap bolt.
- Tighten the front fork upper clamp bolt ④.

Handlebar clamp bolt: 23 N·m (2.3 kgf·m, 16.5 lb-ft)
Front fork cap bolt: 23 N·m (2.3 kgf·m, 16.5 lb-ft)
Front fork upper clamp bolt: 23 N·m (2.3 kgf·m, 16.5 lb-ft)

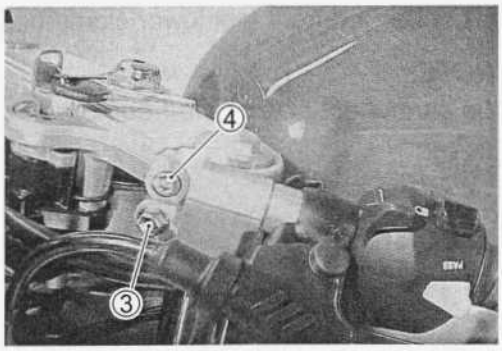

- Install the front fender. (☞ 6-3 of the SV650 Service Manual)
- Install the front wheel. (☞ 6-9 of the SV650 Service Manual)
- Install the brake calipers. (☞ 6-50 of the SV650 Service Manual)

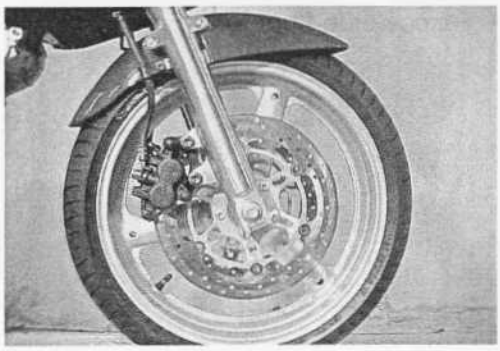

STEERING
CONSTRUCTION

① Steering stem upper bracket
② Steering stem nut
③ Dust seal
④ Steering stem upper bearing
⑤ Steering stem lower bearing
⑥ Steering stem
⑦ Handlebar
⑧ Handlebar balancer

Ⓐ Steering stem head nut
Ⓑ Front fork upper clamp bolt
Ⓒ Front fork lower clamp bolt
Ⓓ Handlebar clamp bolt
Ⓔ Handlebar set bolt

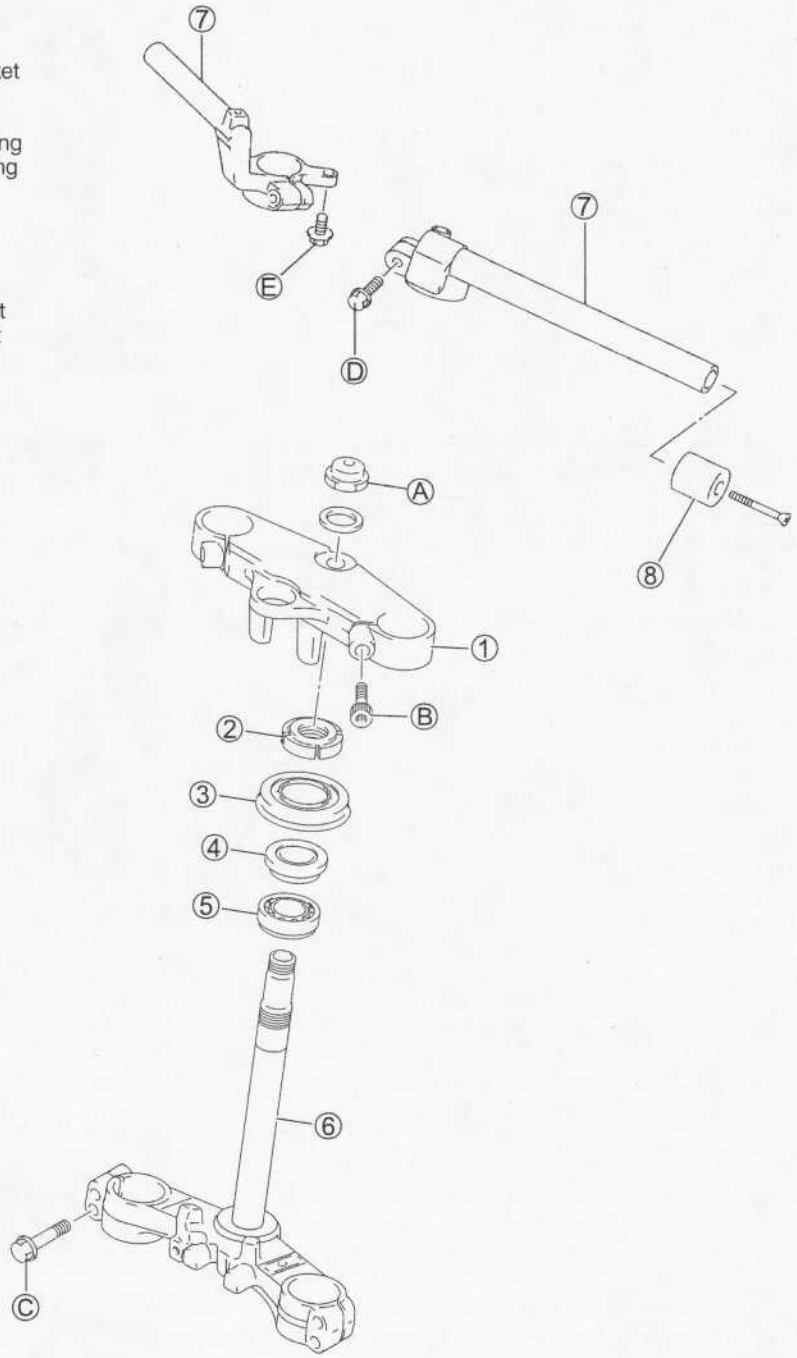

ITEM	N·m	kgf·m	lb-ft
Ⓐ	65	6.5	47.0
ⒷⒸⒹ	23	2.3	16.5
Ⓔ	10	1.0	7.0

HANDLEBARS

REMOVAL

- Remove the following items from the left handlebar.
  ① Left handlebar switch
  ② Handlebar balancer
  ③ Grip rubber
  ④ Clutch cable/Clutch lever holder

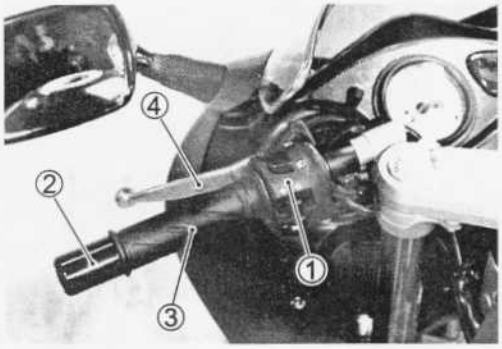

- Remove the following items from the right handlebar.
  ⑤ Right handlebar switch
  ⑥ Throttle cables
  ⑦ Handlebar balancer
  ⑧ Throttle grip
  ⑨ Front brake master cylinder/reservoir

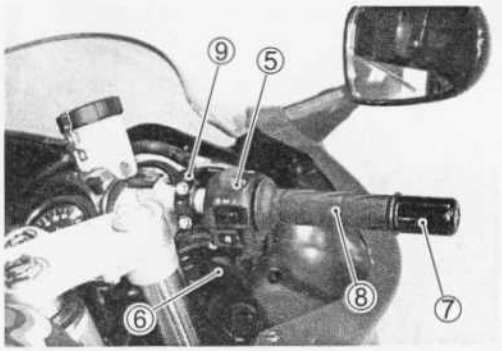

⚠ CAUTION

Do not turn the front brake master cylinder upside down.

- Lift and support the fuel tank. (☞ 4-4 of the SV650 Service Manual)
- Remove the air cleaner box. (☞ 3-4 of the SV650 Service Manual)
- Disconnect the ignition switch lead wire coupler.

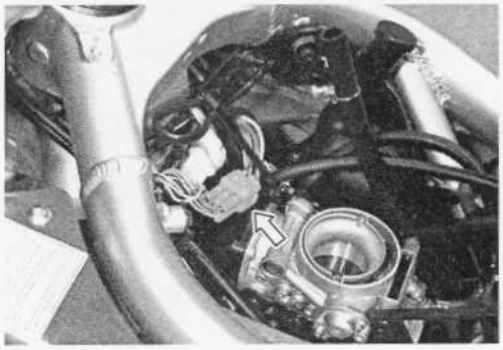

- Remove the handlebar set bolts.

- Remove the steering stem upper bracket.
- Loosen the handlebar clamp bolts and remove the handle bars.

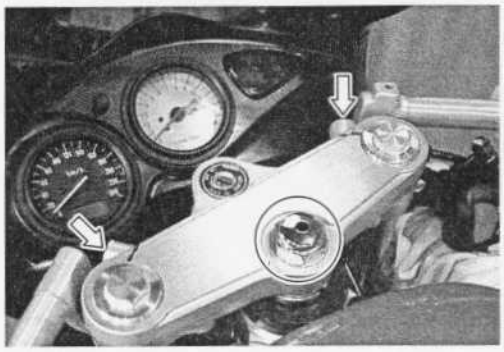

INSTALLATION

- Install the handlebars to the front forks.

NOTE:
After installing the steering stem upper bracket, tighten the handlebar set bolts and the clamp bolts.

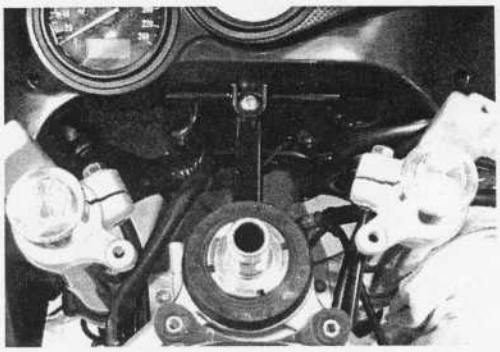

- Tighten the steering stem head nut and the front fork upper clamp bolts to the specified torque.

Steering stem head nut: 65 N·m (6.5 kgf·m, 47.0 lb-ft)
Front fork upper clamp bolt: 23 N·m (2.3 kgf·m, 16.5 lb-ft)

- Connect the ignition switch lead wire coupler.

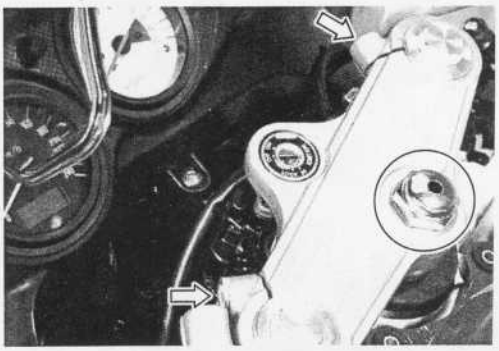

- Tighten the handlebar clamp bolts and the set bolts to the specified torque.

Handlebar clamp bolt: 23 N·m (2.3 kgf·m, 16.5 lb-ft)
Handlebar set bolt: 10 N·m (1.0 kgf·m, 7.0 lb-ft)

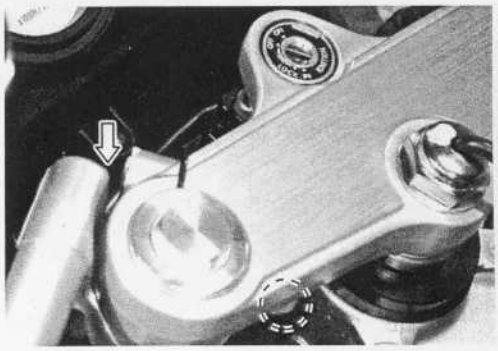

- Install the following items to the right handlebar.
  ① Front brake master cylinder/reservoir
  ② Throttle grip
  ③ Handlebar balancer
  ④ Throttle cables
  ⑤ Right handlebar switch

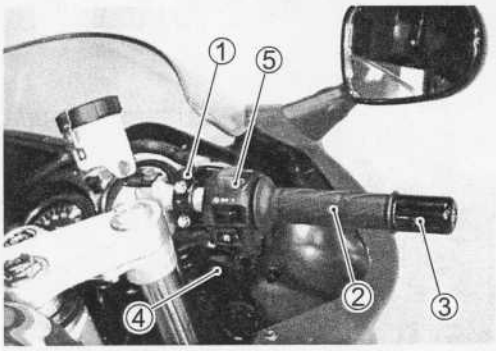

NOTE:
* *Apply grease to the throttle cable and the cable drum.*

99000-25010: SUZUKI SUPER GREASE "A"

* *Align the portion Ⓐ of the right handlebar switch with the hole Ⓑ of the handlebar.*
* *Adjust the throttle cable play. (☞ 2-16 of the SV650 Service Manual)*

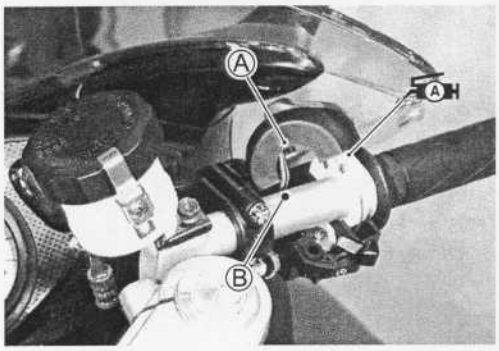

- Tighten the front brake master cylinder mounting bolts to the specified torque.

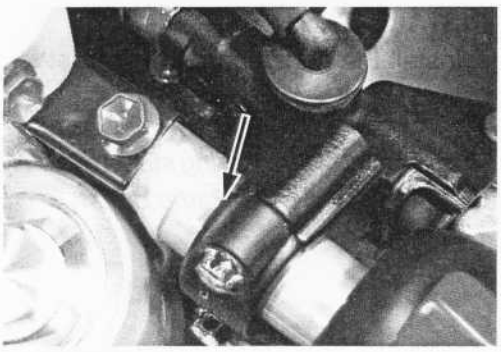

NOTE:
Align the front brake master cylinder holder's matching surface with the punched mark on the handlebar and tighten the upper mounting bolt first, then lower one.

Front brake master cylinder mounting bolt: 10 N·m (1.0 kgf·m, 7.0 lb-ft)

- Install the following items to the left handlebar.
  ① Clutch cable/Clutch lever holder
  ② Grip rubber
  ③ Handlebar balancer
  ④ Left handlebar switch

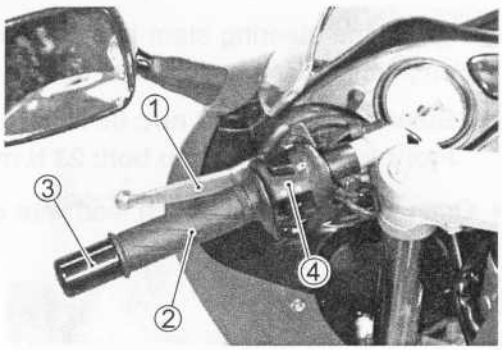

NOTE:
* *Align the portion Ⓐ of the left handlebar switch with the hole Ⓑ of the handlebar.*
* *Lightly adhere the grip rubber to the handlebar.*

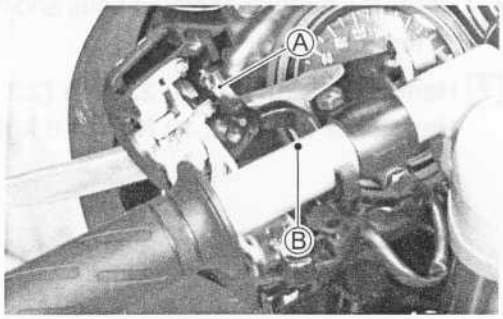

- Tighten the clutch holder mounting bolt to the specified torque.

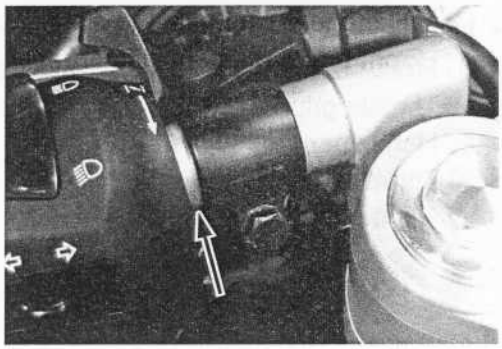

NOTE:
Align the clutch holder's matching surface with the punched mark on the handlebar.

Clutch holder mounting bolt: 10 N·m (1.0 kgf·m, 7.0 lb-ft)

STEERING REMOVAL

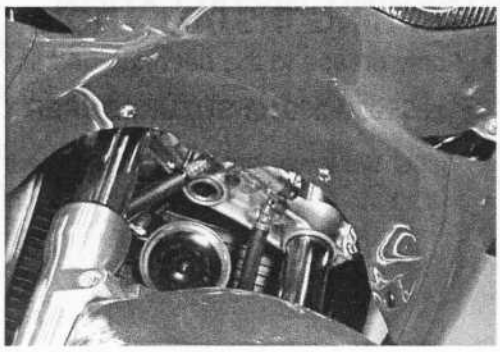

- Remove the following items.
  Cowling (☞ 12-9)
  Front wheel (☞ 6-7 of the SV650 Service Manual)
  Handlebars (☞ 12-14)
  Front fork (☞ 12-11)
  Horn

NOTE:
Remove the horn with its bracket.

- Remove the front brake assembly by removing the brake hose joint.

⚠ CAUTION

Do not turn the front brake master cylinder upside down.

- Remove the steering stem nut using the special tool.

TOOL 09940-14911: Steering stem nut wrench

NOTE:
Hold the steering stem lower bracket to prevent it from falling.

- Remove the steering stem.

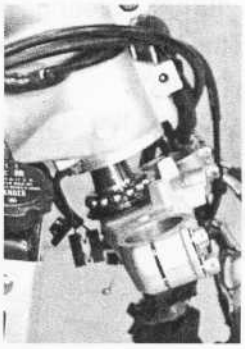

- Remove the dust seal, the inner race and the bearing.

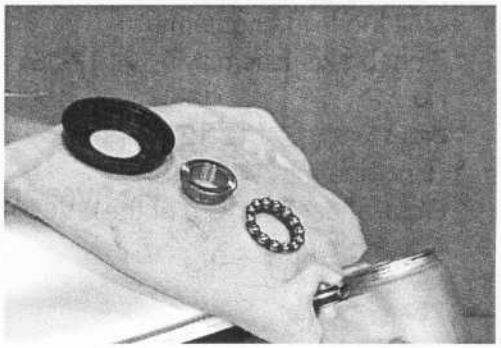

STEERING INSTALLATION

- Apply grease to the bearings and lip of dust seal.

99000-25010: SUZUKI SUPER GREASE "A"

- Install the lower bearing to the steering stem lower bracket.
- Install the upper bearing, bearing inner race and dust seal.

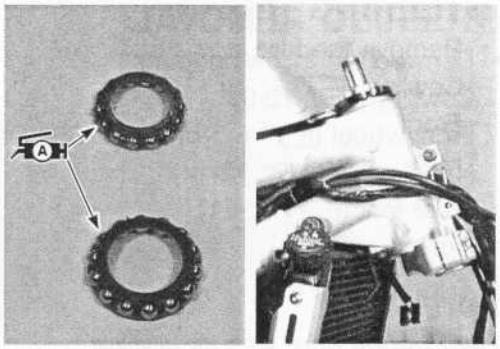

- Tighten the steering stem nut to the specified torque with the special tools.

09940-14911: Steering stem nut wrench

Steering stem nut: 45 N·m (4.5 kgf·m, 32.5 lb-ft)

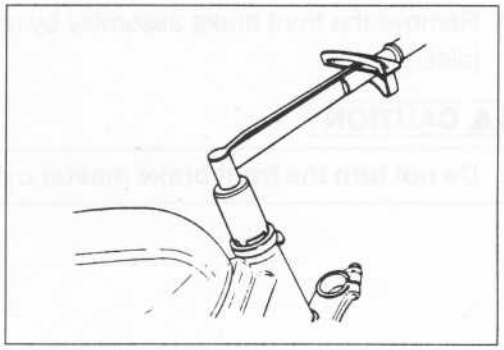

- Turn the steering stem lower bracket about five or six times to the left and right so that the angular ball bearings will be seated properly.
- Loosen the stem nut by 1/4 – 1/2 turn.

NOTE:
This adjustment will vary from motorcycle to motorcycle.

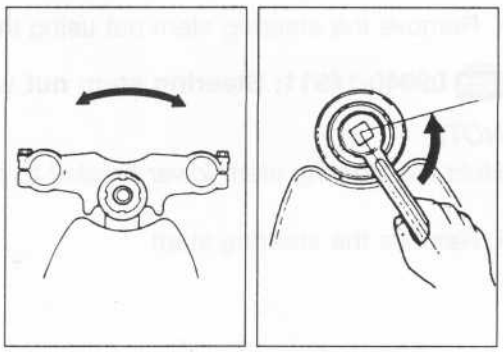

- Install the following items.
  * Front brake assembly (☞ 12-35)
  * Horn
  * Front fork (☞ 12-12)
  * Handlebars (☞ 12-15)
  * Front wheel (☞ 6-9 of the SV650 Service Manual)
  * Cowling

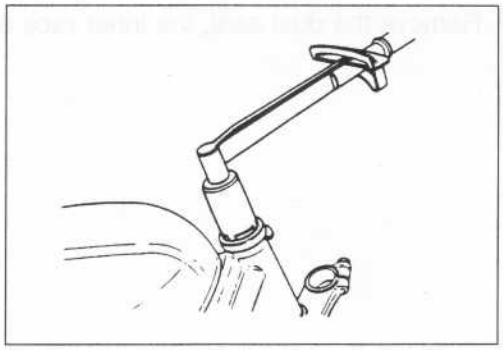

FRONT BRAKE

CONSTRUCTION

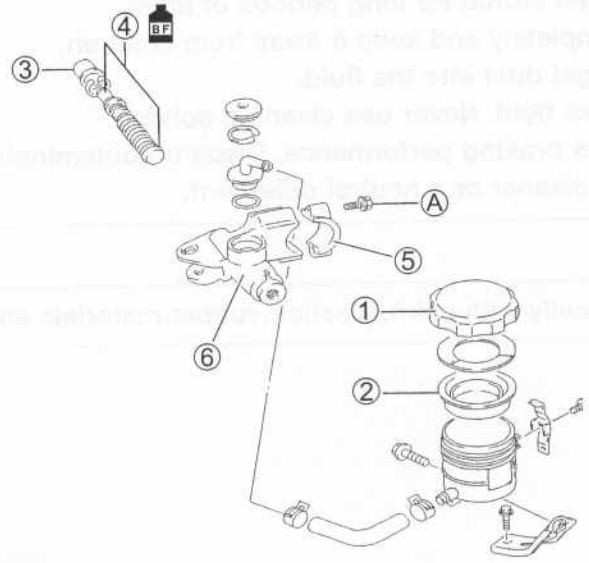

① Master cylinder reservoir cap
② Diaphragm
③ Dust boot
④ Piston/cup set
⑤ Master cylinder clamp
⑥ Master cylinder
⑦ Brake hose #1
⑧ Brake hose joint
⑨ Brake hose #2 (R)
⑩ Brake hose #2 (L)
⑪ Brake pads
⑫ Brake pad mounting pin
⑬ Clip
⑭ Spring
⑮ Dust seal
⑯ Piston seal
⑰ Brake caliper pistons
⑱ Brake caliper
⑲ Brake caliper holder

Ⓐ Master cylinder clamp bolt
Ⓑ Brake hose union bolt
Ⓒ Air bleeder valve
Ⓓ Brake caliper mounting bolt

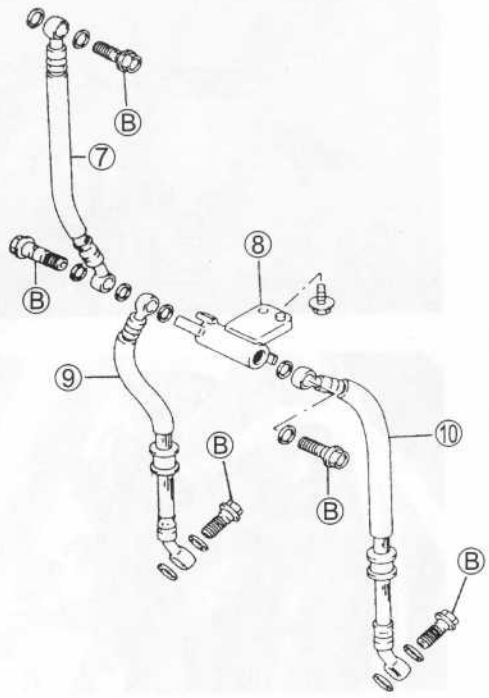

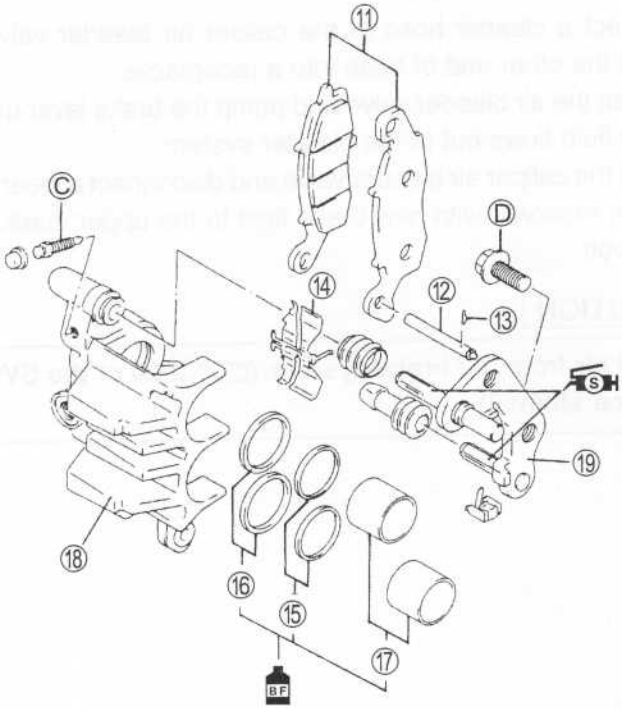

ITEM	N·m	kgf·m	lb-ft
Ⓐ	10	1.0	7.0
Ⓑ	23	2.3	16.5
Ⓒ	7.5	0.75	5.5
Ⓓ	39	3.9	28.0

⚠ WARNING

- **This brake system is filled with an ethylene glycol-based DOT 4 brake fluid. Do not use or mix different types of fluid, such as silicone-based or petroleum-based fluids.**
- **Do not use any brake fluid taken from old, used or unsealed containers. Never reuse brake fluid left over from the last servicing or which has been stored for long periods of time.**
- **When storing brake fluid, seal the container completely and keep it away from children.**
- **When replenishing brake fluid, take care not to get dust into the fluid.**
- **When washing brake components, use new brake fluid. Never use cleaning solvent.**
- **A contaminated brake disc or brake pad reduces braking performance. Discard contaminated pads and clean the disc with high quality brake cleaner or a neutral detergent.**

⚠ CAUTION

Handle brake fluid with care: the fluid reacts chemically with paint, plastics, rubber materials etc..

BRAKE FLUID REPLACEMENT

- Place the motorcycle on a level surface and keep the handlebars straight.
- Remove the brake fluid reservoir cap and diaphragm by removing the cap stopper.
- Suck up the old brake fluid as much as possible.
- Fill the reservoir with new brake fluid.

DATA Brake fluid type
Specification: DOT 4

- Connect a cleaner hose to the caliper air bleeder valve and insert the other end of hose into a receptacle.
- Loosen the air bleeder valve and pump the brake lever until old brake fluid flows out of the bleeder system.
- Close the caliper air bleeder valve and disconnect a clear hose. Fill the reservoir with new brake fluid to the upper mark of the reservoir.

⚠ CAUTION

Bleed air from the brake system. (☞ 2-24 of the SV650 Service Manual)

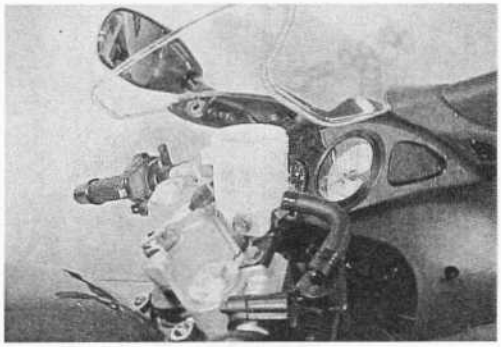

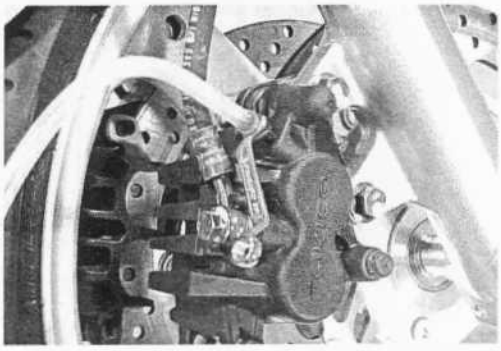

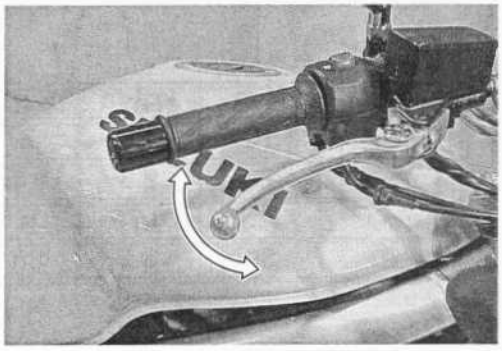

FRONT MASTER CYLINDER

REMOVAL AND DISASSEMBLY

- Drain brake fluid. (☞ 6-47 of the SV650 Service Manual)
- Disconnect the brake light switch lead wire.

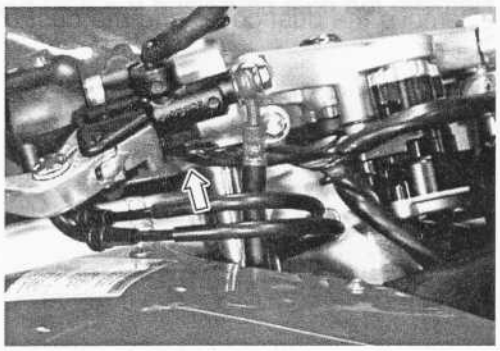

- Place a rag underneath the brake hose union bolt on the master cylinder to catch any split brake fluid. Remove the brake hose union bolt and disconnect the brake hose.

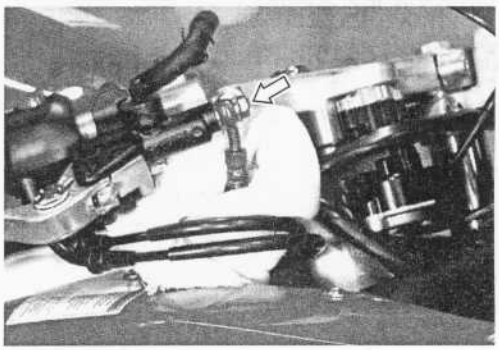

⚠ CAUTION

Immediately wipe off any brake fluid contacting any part of the motorcycle. The brake fluid reacts chemically with paint, plastics and rubber materials, etc., and will damage them severely.

- Remove the master cylinder with the reservoir.

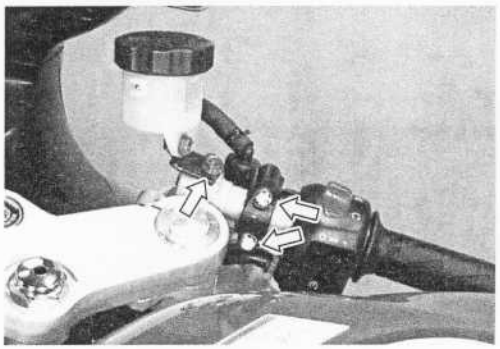

- Remove the reservoir from the master cylinder.

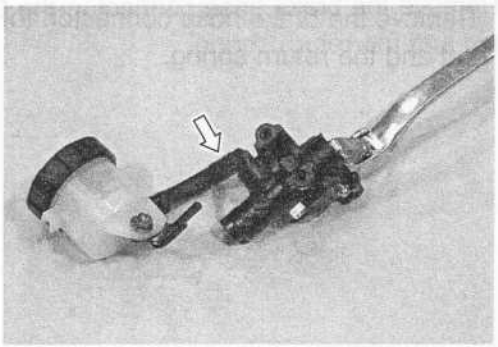

- Remove the brake lever and the brake light switch.

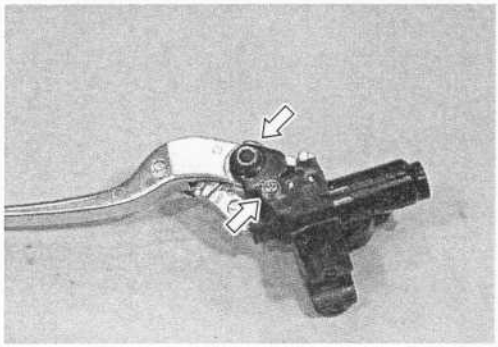

- Remove the dust cover and the dust boot.

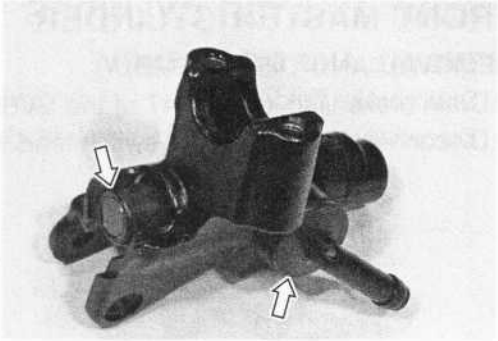

- Remove the circlips.

TOOL 09900-06108: Snap ring pliers

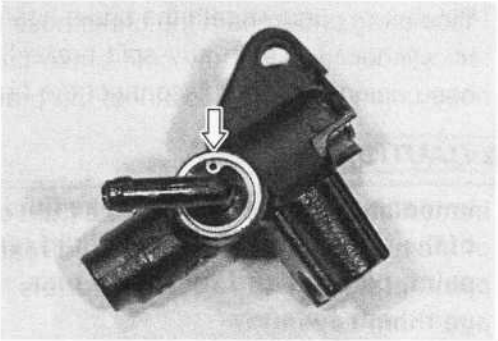

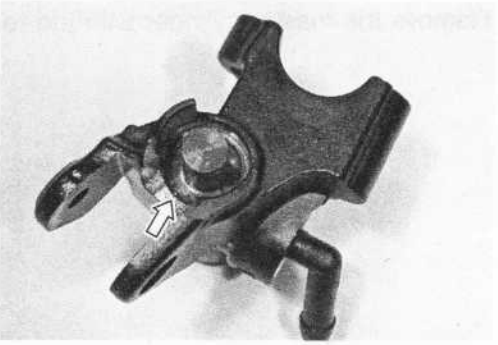

- Remove the brake hose connector, the O-ring, the piston/cup set and the return spring.

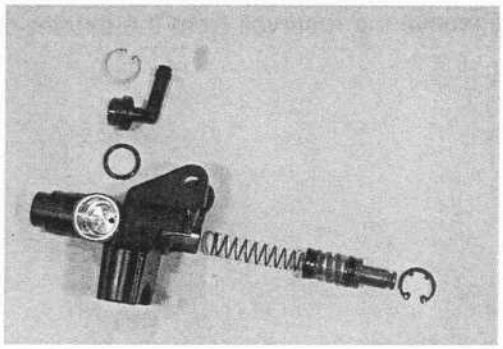

REASSEMBLY AND REMOUNTING

Reassemble the master cylinder in the reverse order of removal and disassembly. Pay attention to the following points:

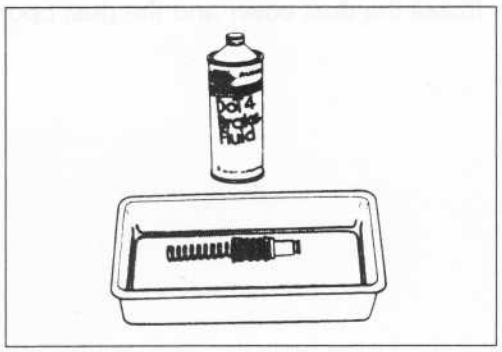

⚠ CAUTION

- **Wash the master cylinder components with fresh brake fluid before reassembly. Never use cleaning solvent or gasoline to wash them.**
- **Do not wipe the components with a rag.**
- **Apply brake fluid to the cylinder bore and all the component to be inserted into the bore.**

- Install the piston/cup set into the master cylinder.

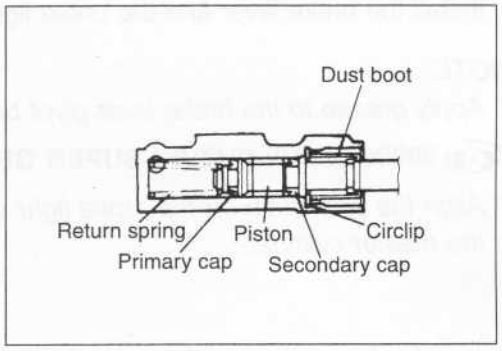

- Install the brake hose connector.

⚠ CAUTION

Use a new O-ring to prevent the fluid leakage.

- Install the circlips.

TOOL 09900-06108: Snap ring pliers

⚠ CAUTION

The round edge side of the circlip must be against to inside.

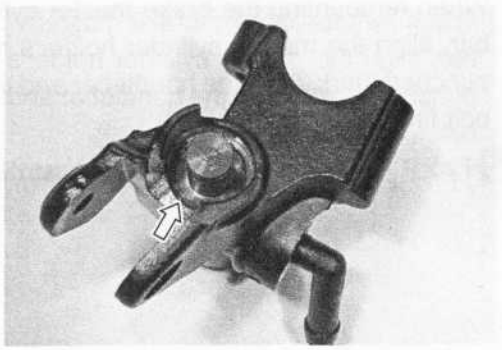

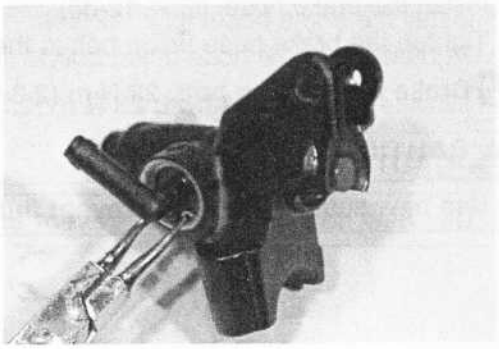

- Install the dust cover and the dust boot.

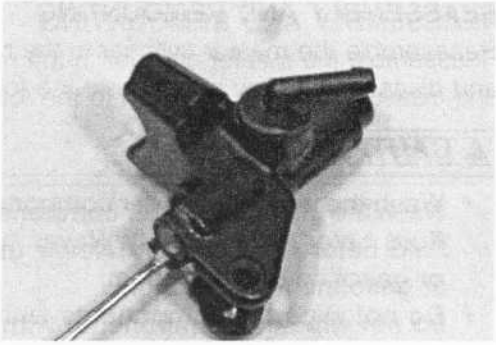

- Install the brake lever and the brake light switch.

NOTE:

* *Apply grease to the brake lever pivot bolt when installing.*

99000-25010: SUZUKI SUPER GREASE "A"

* *Align the projection on the brake light switch with the hole on the master cylinder.*

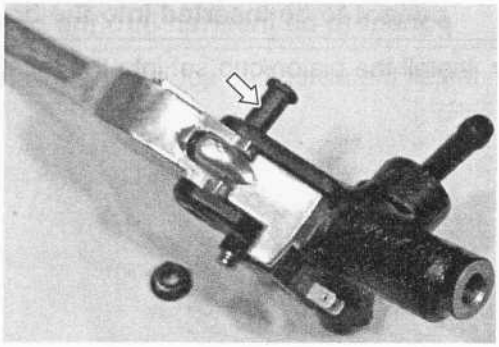

- Install the reservoir to the master cylinder.

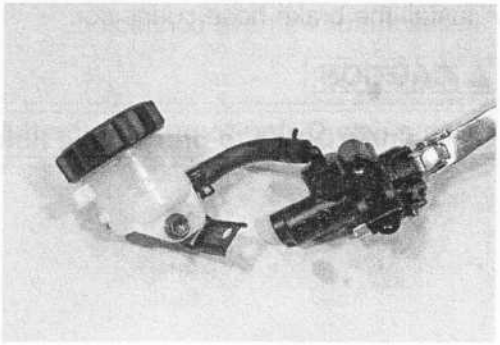

- When remounting the brake master cylinder onto the handlebar, align the master cylinder holder's mating surface Ⓐ with punched mark Ⓑ on the handlebar and tighten the upper clamp bolt first as shown.

Front brake master cylinder mounting bolt: 10 N·m (1.0 kgf·m, 7.0 lb-ft)

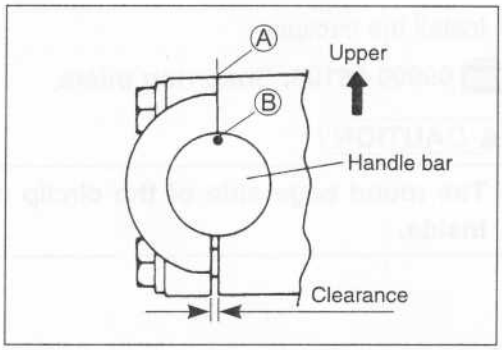

- Install the brake hose. (☞ 12-35)
- Tighten the brake hose union bolt to the specified torque.

Brake hose union bolt: 23 N·m (2.3 kgf·m, 16.5 lb-ft)

⚠ CAUTION

Use new seal washers to prevent fluid leakage.

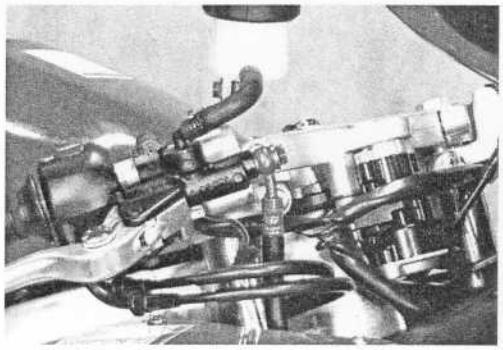

- Connect the brake light switch lead wire.

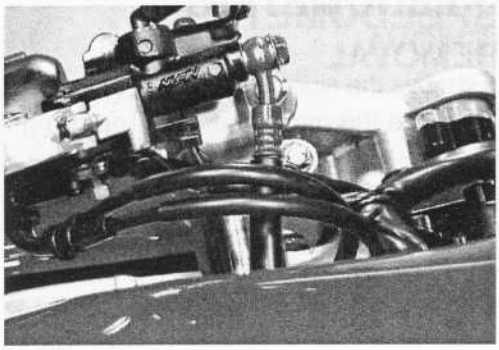

▲ CAUTION

Bleed air from the brake system after reassembling the master cylinder. (☞ 2-24 of the SV650 Service Manual)

SPEEDOMETER

REMOVAL

- Remove the side cowling (R), (L) and center cowling. (☞ 12-9)
- Remove the meter panel by removing the screws.

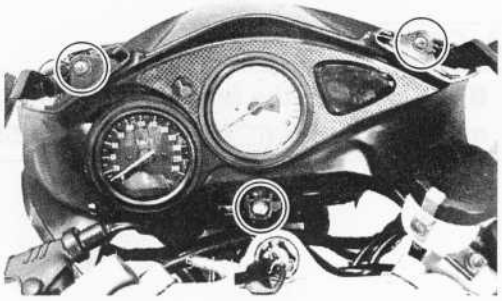

- Disconnect the speedometer coupler.

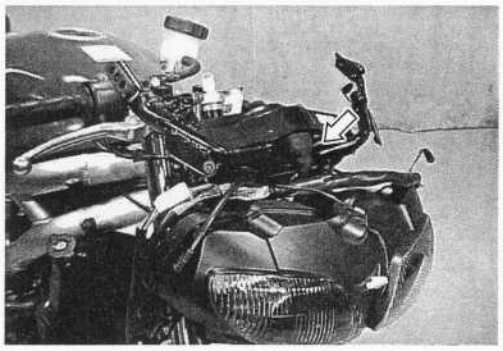

- Remove the nuts.
- Remove the speedometer.

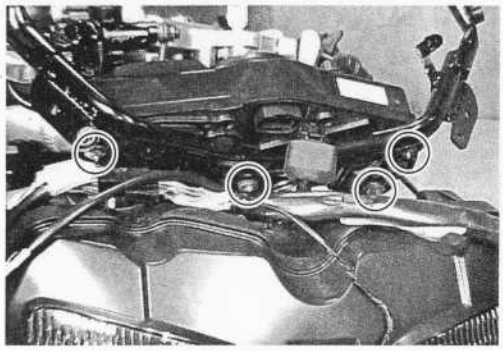

BULB REPLACEMENT

- Remove the sockets.
- Remove the bulbs.
- Reassemble and remount the speedometer assy is the reverse order of removal and disassembly.

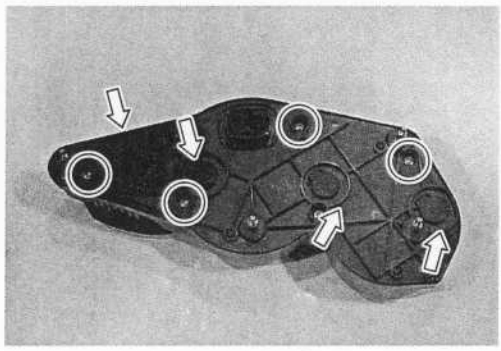

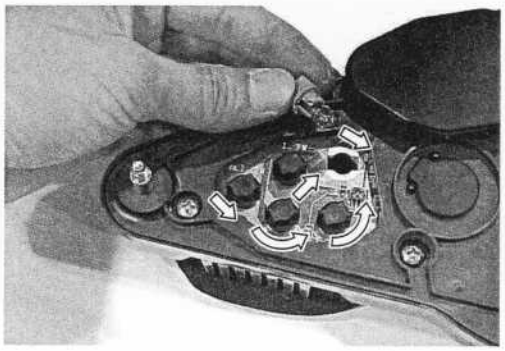

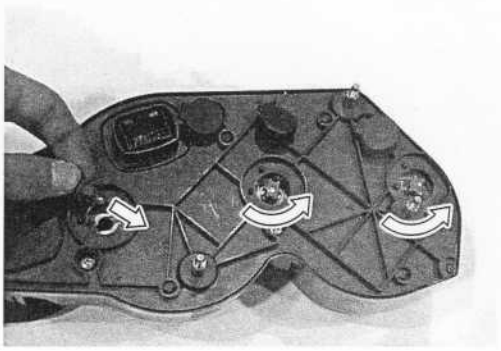

CONSTRUCTION

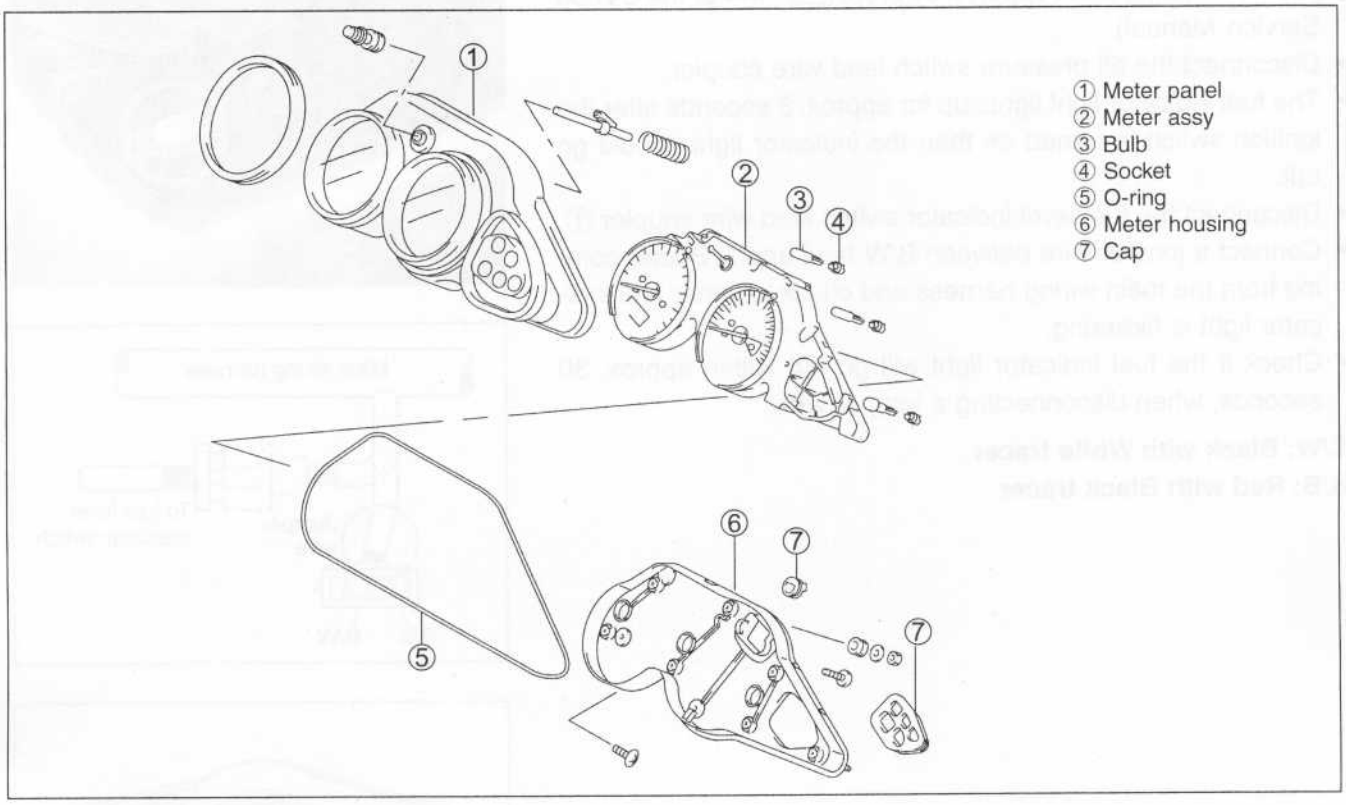

INSPECTION

Using the tester, check the continuity between terminals in the following diagram. If the continuity measured is incorrect, remove and check the bulb.

If the bulb is failure, install the new bulb and check the continuity again. If the bulb is correct, replace the unit with a new one.

Tester knob indication: Diode test (⊣◀)

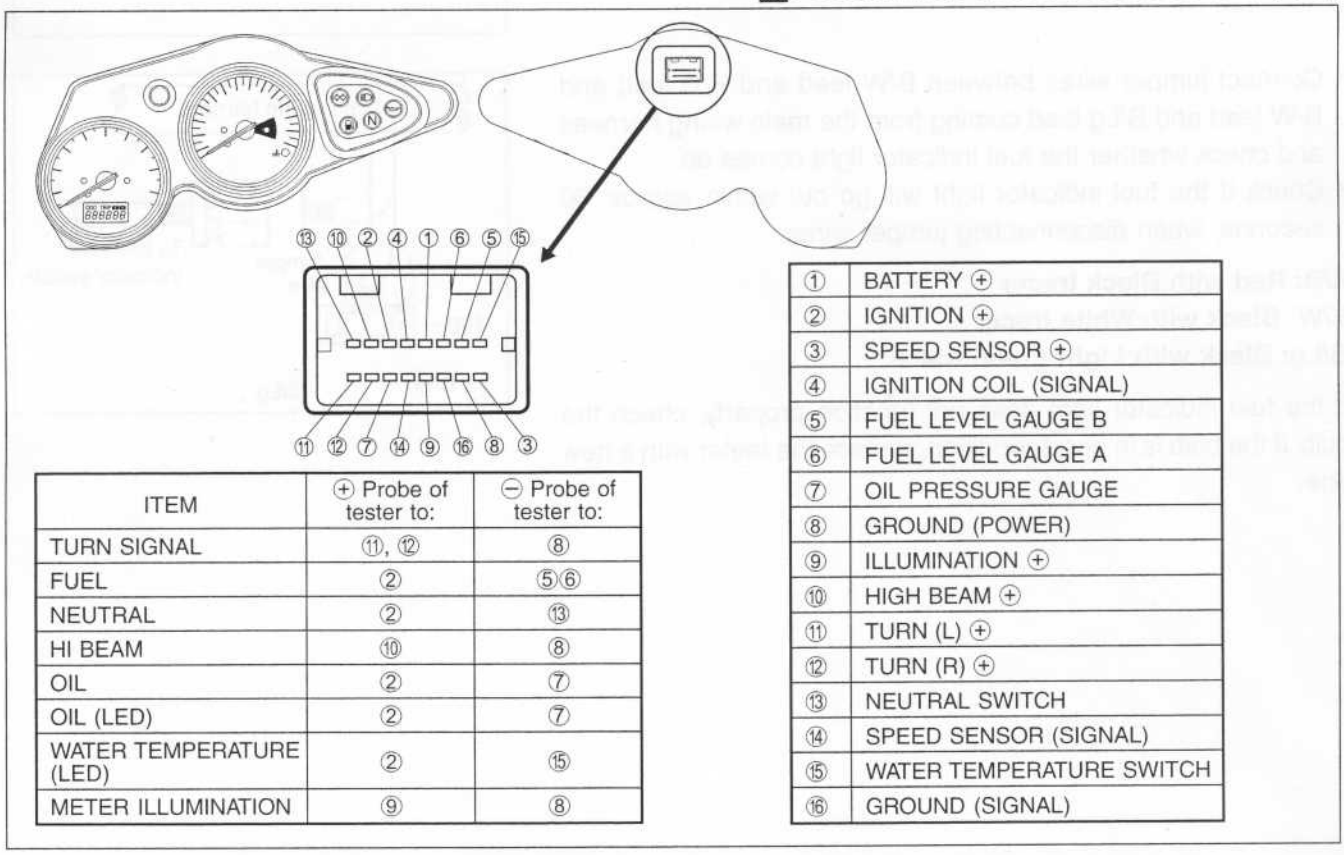

ITEM	⊕ Probe of tester to:	⊖ Probe of tester to:
TURN SIGNAL	⑪, ⑫	⑧
FUEL	②	⑤⑥
NEUTRAL	②	⑬
HI BEAM	⑩	⑧
OIL	②	⑦
OIL (LED)	②	⑦
WATER TEMPERATURE (LED)	②	⑮
METER ILLUMINATION	⑨	⑧

①	BATTERY ⊕
②	IGNITION ⊕
③	SPEED SENSOR ⊕
④	IGNITION COIL (SIGNAL)
⑤	FUEL LEVEL GAUGE B
⑥	FUEL LEVEL GAUGE A
⑦	OIL PRESSURE GAUGE
⑧	GROUND (POWER)
⑨	ILLUMINATION ⊕
⑩	HIGH BEAM ⊕
⑪	TURN (L) ⊕
⑫	TURN (R) ⊕
⑬	NEUTRAL SWITCH
⑭	SPEED SENSOR (SIGNAL)
⑮	WATER TEMPERATURE SWITCH
⑯	GROUND (SIGNAL)

FUEL LEVEL INDICATOR LIGHT INSPECTION

- Lift the fuel tank and support it by prop. (☞ 4-4 of the SV650 Service Manual)
- Disconnect the oil pressure switch lead wire coupler.
- The fuel indicator light lights up for approx. 3 seconds after the ignition switch is turned on then the indicator light should go out.
- Disconnect the fuel level indicator switch lead wire coupler ①.
- Connect a jumper wire between B/W lead and R/B lead coming from the main wiring harness and check whether fuel indicator light is flickering.
- Check if the fuel indicator light will go out within approx. 30 seconds, when disconnecting a jumper wire.

B/W: Black with White tracer
R/B: Red with Black tracer

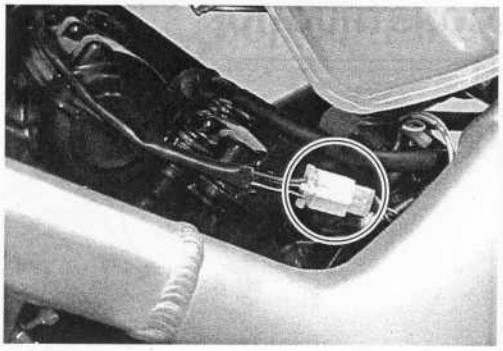

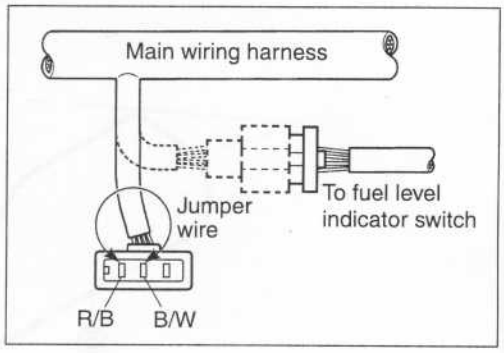

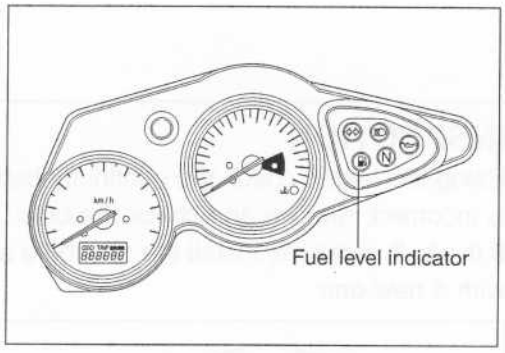

- Connect jumper wires between B/W lead and R/B lead and B/W lead and B/Lg lead coming from the main wiring harness and check whether the fuel indicator light comes on.
- Check if the fuel indicator light will go out within approx. 30 seconds, when disconnecting jumper wires.

R/B: Red with Black tracer
B/W: Black with White tracer
B/Lg: Black with Light green tracer

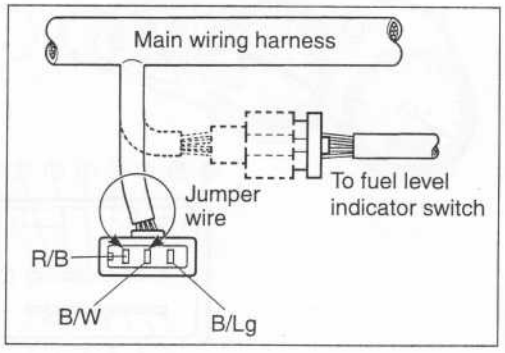

If the fuel indicator light does not function properly, chech the bulb. If the bulb is in good condition, replace the meter with a new one.

SPEED SENSOR INSPECTION

- Lift the fuel tank and support it by prop. (☞ 4-4 of the SV650 Service Manual)
- Remove the air cleaner. (☞ 4-18 of the SV650 Service Manual)
- Disconnect the speed sensor coupler.

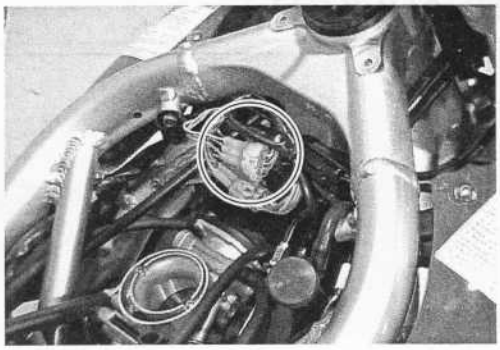

- Connect four 1.5 V dry cells, 1kΩ resistance and the tester to the speed sensor lead coupler as shown.

TOOL 09900-25008: Multi-circuit tester

Tester knob indication: Voltage (⎓)

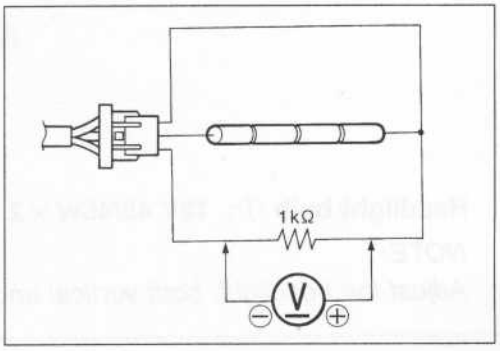

Lift and turn the front wheel and check that voltage varies between 0 – 6 V.
If any abnormal condition is noted, replace the sensor.

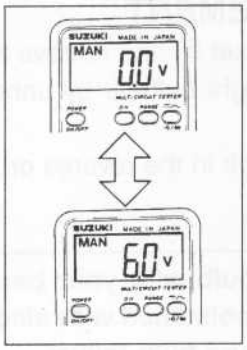

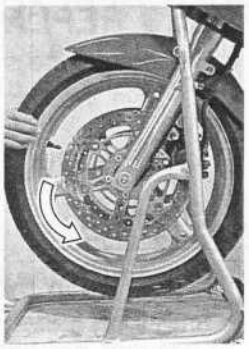

HEADLIGHT

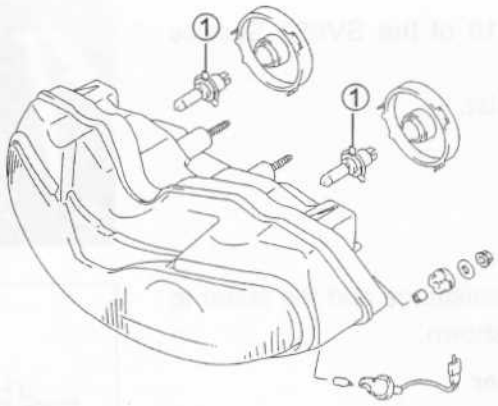

Headlight bulb ①: 12V 45/45W × 2

NOTE:

Adjust the headlight, both vertical and horizontal, after reassembling.

BULB REPLACEMENT

- Disconnect the socket ① and remove the rubber cap ②.
- Remove the headlight bulb ④ by unhooking the bulb holder spring ③.
- Reassemble the bulb in the reverse order of removal.

⚠ CAUTION

If you touch the bulb with your bare hands, clean the bulb with a cloth moistened with alcohol or soapy water to prevent premature bulb failure.

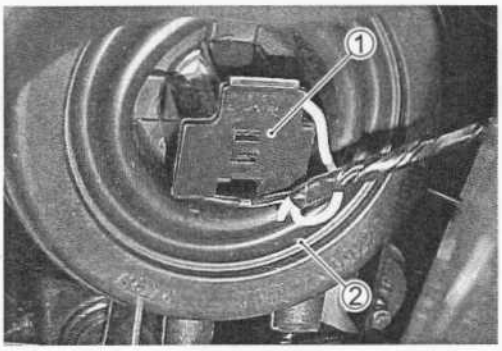

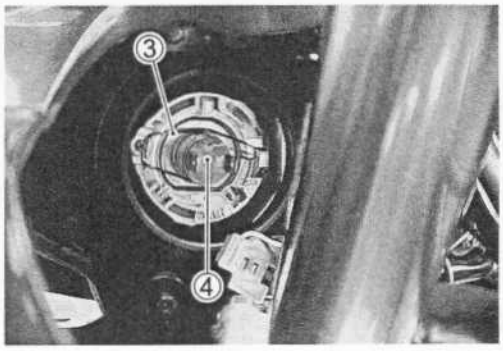

WIRING DIAGRAM

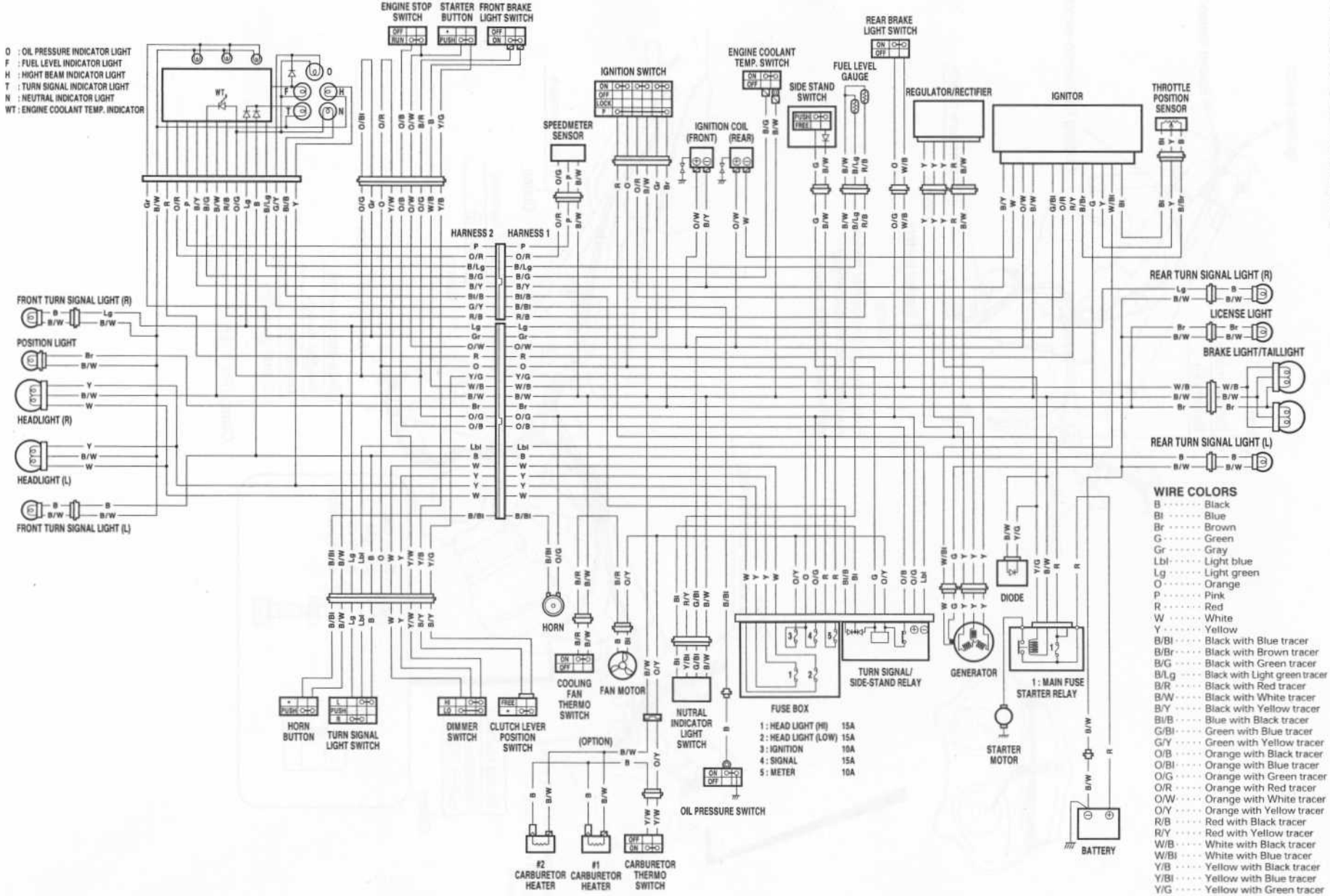

WIRE COLORS

- B ····· Black
- Bl ····· Blue
- Br ····· Brown
- G ····· Green
- Gr ····· Gray
- Lbl ····· Light blue
- Lg ····· Light green
- O ····· Orange
- P ····· Pink
- R ····· Red
- W ····· White
- Y ····· Yellow
- B/Bl ····· Black with Blue tracer
- B/Br ····· Black with Brown tracer
- B/G ····· Black with Green tracer
- B/Lg ····· Black with Light green tracer
- B/R ····· Black with Red tracer
- B/W ····· Black with White tracer
- B/Y ····· Black with Yellow tracer
- Bl/B ····· Blue with Black tracer
- G/Bl ····· Green with Blue tracer
- G/Y ····· Green with Yellow tracer
- O/B ····· Orange with Black tracer
- O/Bl ····· Orange with Blue tracer
- O/G ····· Orange with Green tracer
- O/R ····· Orange with Red tracer
- O/W ····· Orange with White tracer
- O/Y ····· Orange with Yellow tracer
- R/B ····· Red with Black tracer
- R/Y ····· Red with Yellow tracer
- W/B ····· White with Black tracer
- W/Bl ····· White with Blue tracer
- Y/B ····· Yellow with Black tracer
- Y/Bl ····· Yellow with Blue tracer
- Y/G ····· Yellow with Green tracer
- Y/W ····· Yellow with White tracer

WIRE HARNESS ROUTING

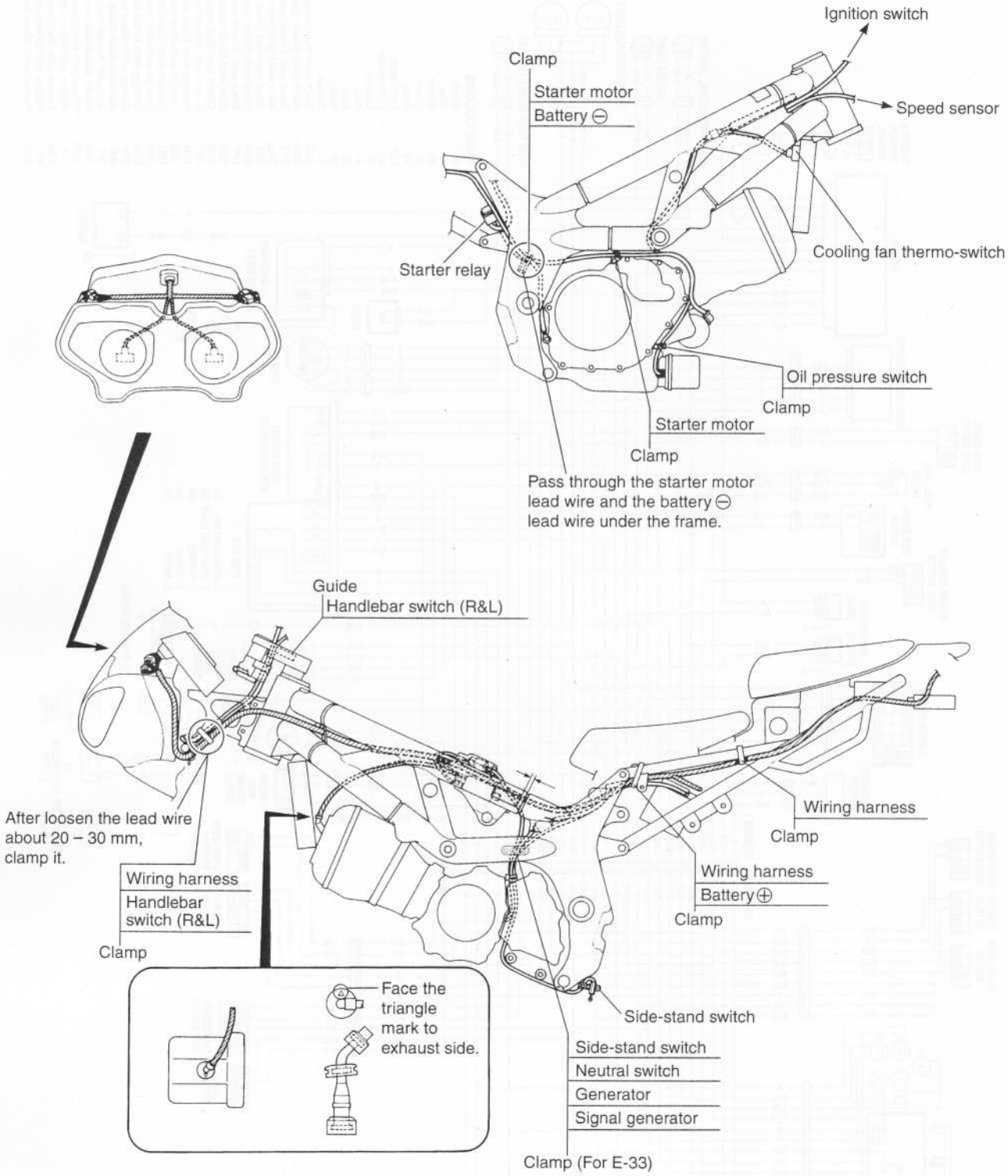

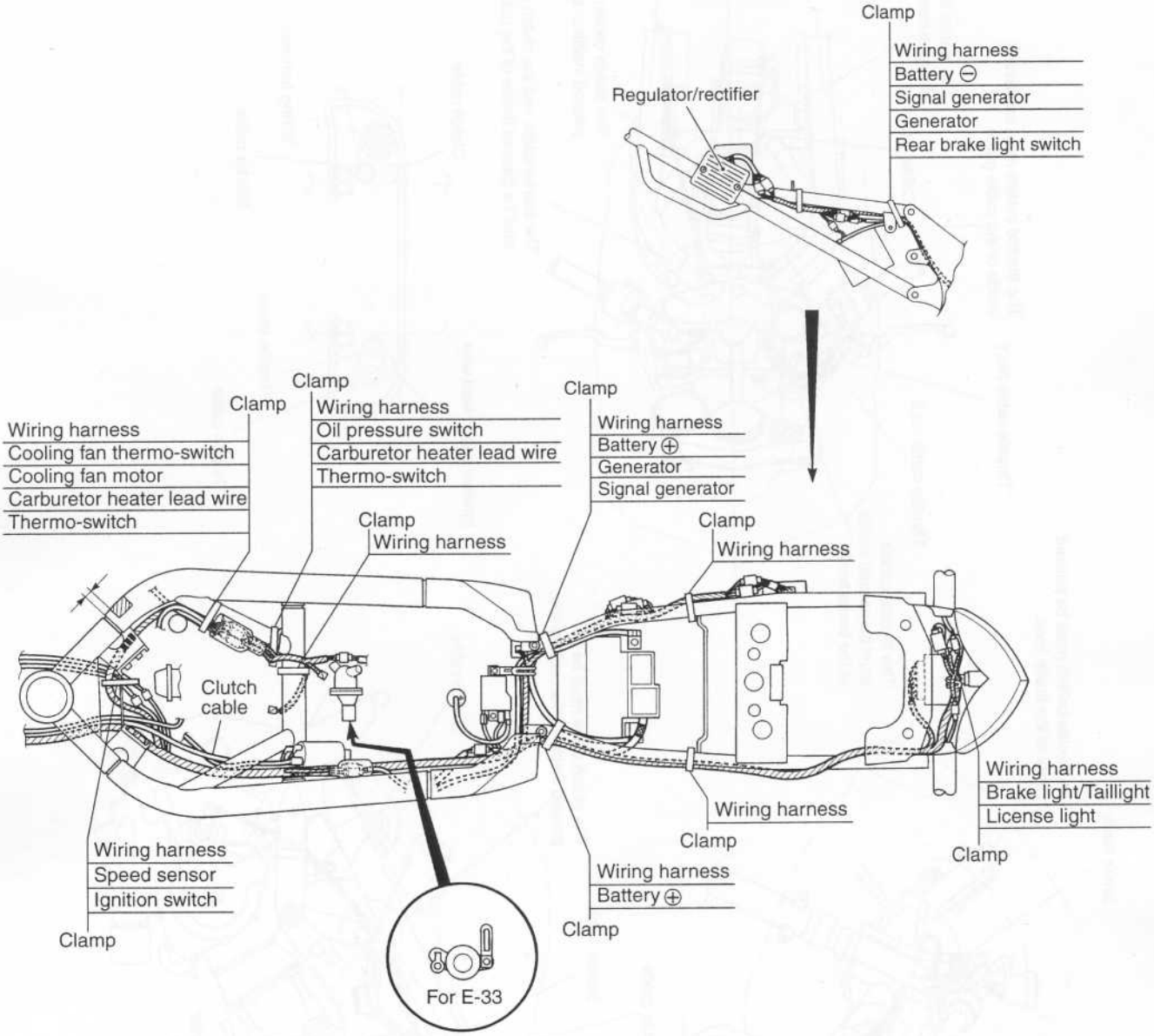
Clamp
Wiring harness
Battery ⊖
Signal generator
Generator
Rear brake light switch
Regulator/rectifier
Clamp
Wiring harness
Cooling fan thermo-switch
Cooling fan motor
Carburetor heater lead wire
Thermo-switch
Clamp
Wiring harness
Oil pressure switch
Carburetor heater lead wire
Thermo-switch
Clamp
Wiring harness
Battery ⊕
Generator
Signal generator
Clamp
Wiring harness
Clamp
Wiring harness
Clutch cable
Wiring harness
Brake light/Taillight
License light
Clamp
Wiring harness
Clamp
Wiring harness
Speed sensor
Ignition switch
Clamp
Wiring harness
Battery ⊕
Clamp
For E-33

CABLE ROUTING

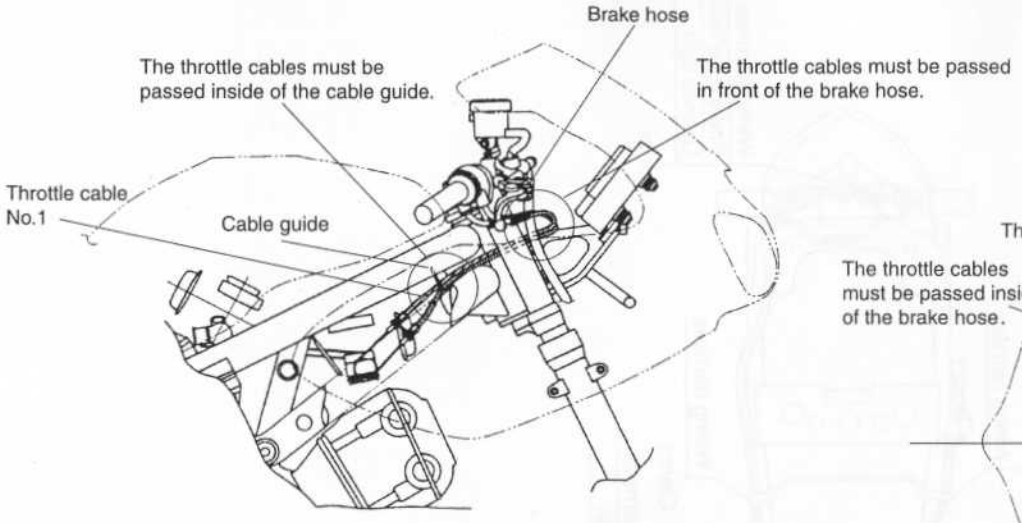

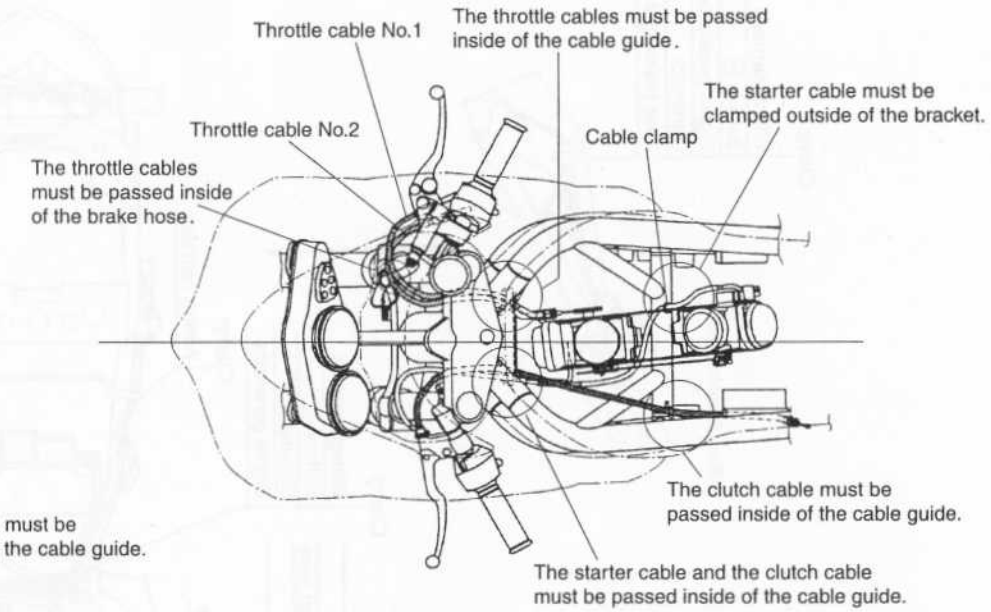

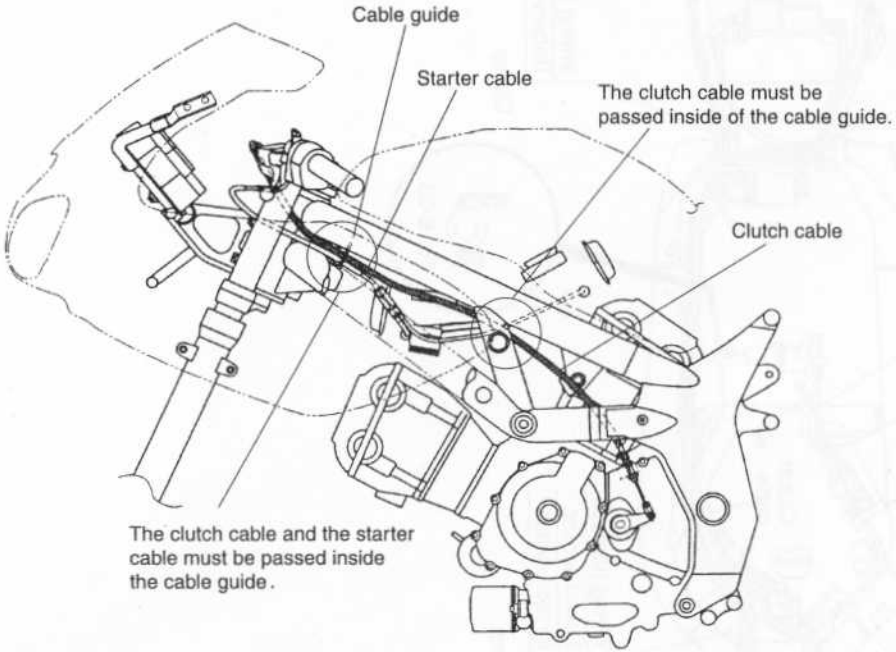

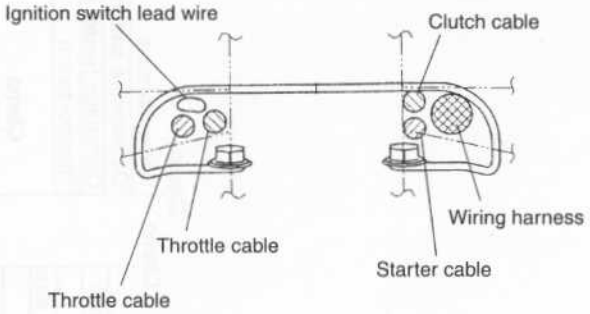

FRONT BRAKE HOSE ROUTING

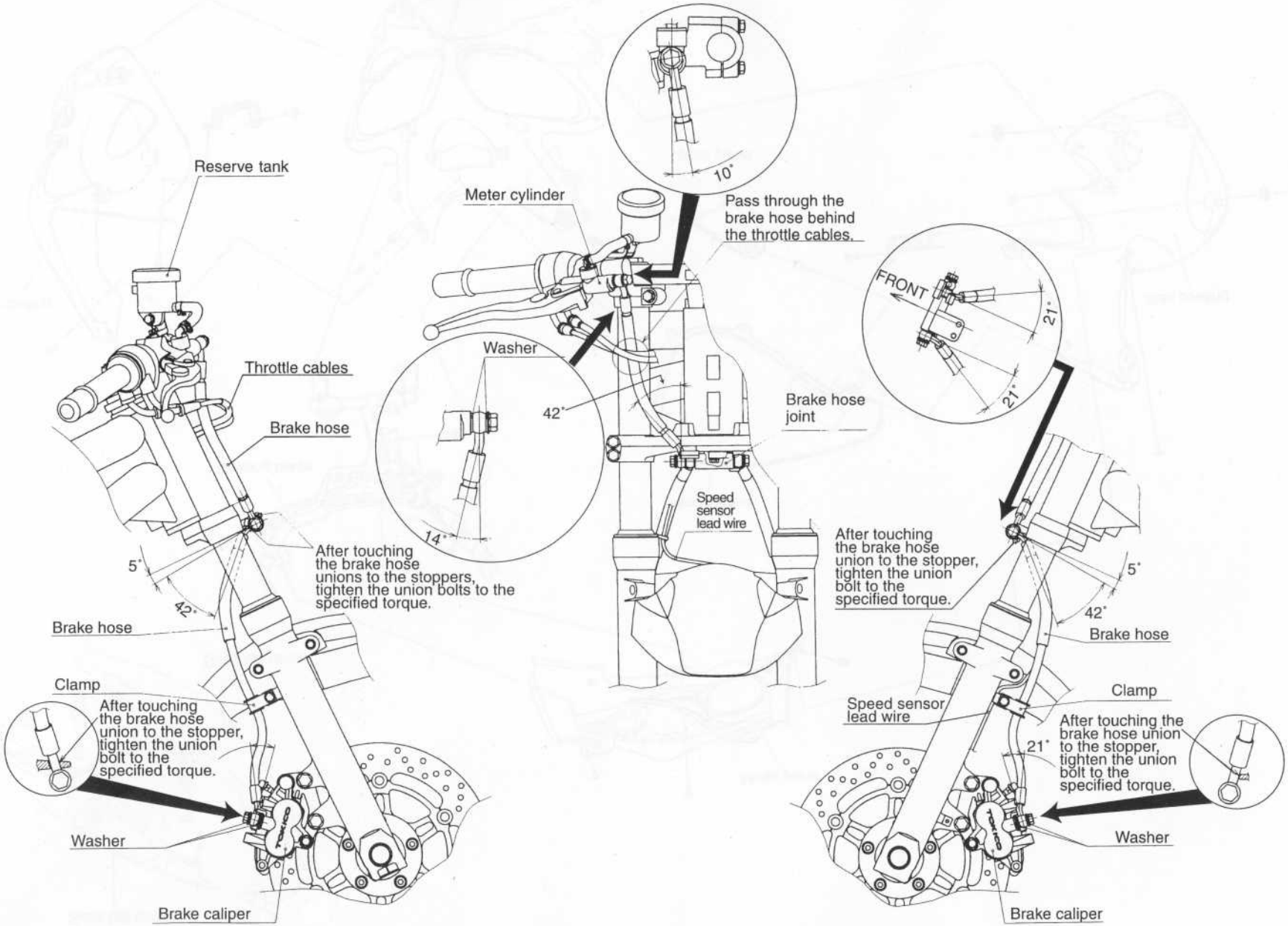

COWLING AND SEAT TAIL COVER SET-UP

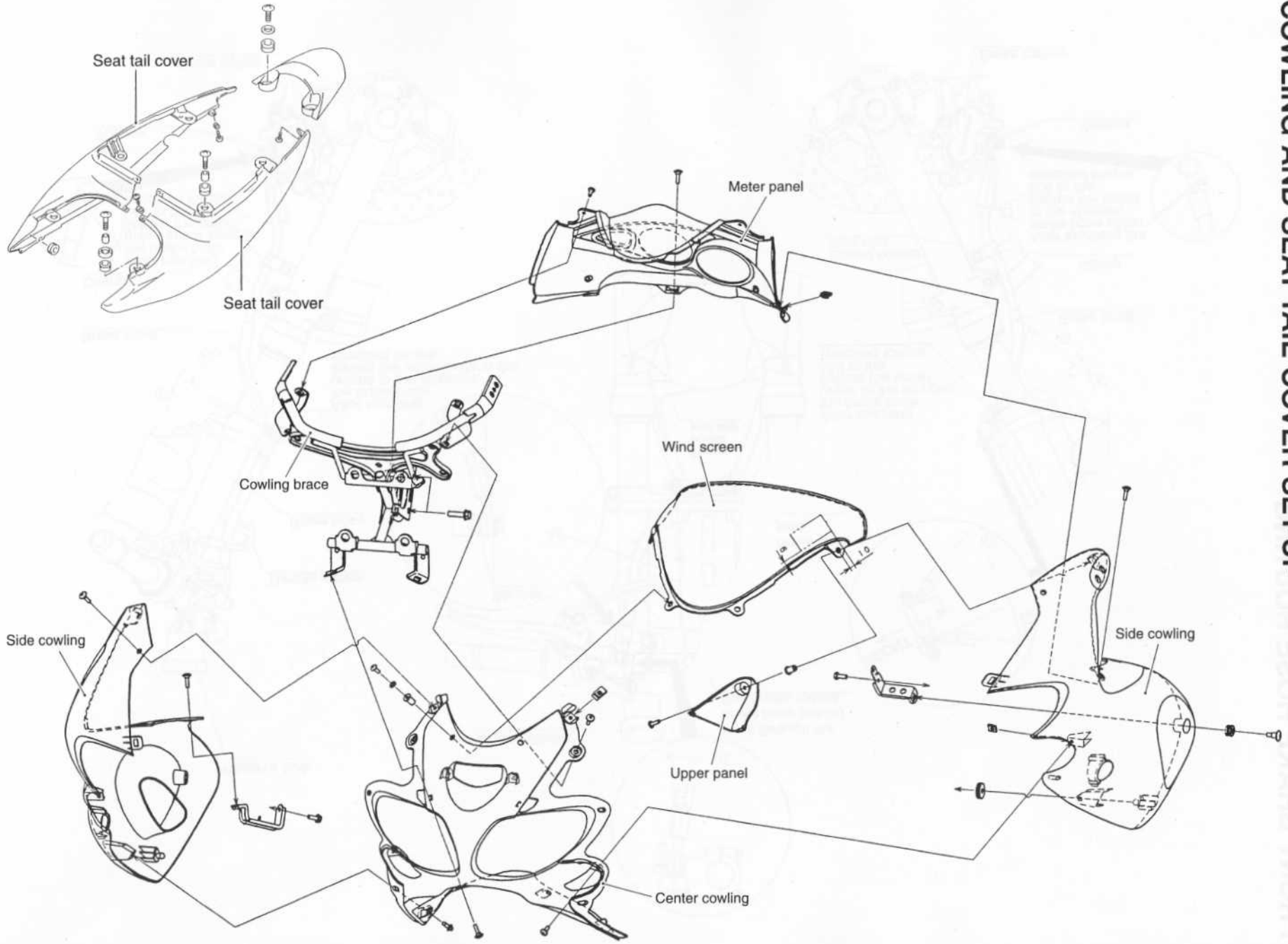

SERVICE DATA

VALVE + GUIDE

Unit: mm (in)

ITEM		STD/SPEC.	LIMIT
Valve diam.	IN.	31 (1.2)	———
	EX.	25.5 (1.0)	———
Valve clearance (When cold)	IN.	0.1 – 0.2 (0.004 – 0.008)	———
	EX.	0.2 – 0.3 (0.008 – 0.012)	———
Valve guide to valve stem clearance	IN.	0.020 – 0.047 (0.0008 – 0.0019)	———
	EX.	0.030 – 0.057 (0.0012 – 0.0022)	———
Valve guide I.D.	IN. & EX.	4.500 – 4.512 (0.1772 – 0.1776)	———
Valve stem O.D.	IN.	4.465 – 4.480 (0.1758 – 0.1764)	———
	EX.	4.455 – 4.470 (0.1754 – 0.1760)	———
Valve stem deflection	IN. & EX.	———	0.35 (0.014)
Valve stem runout	IN. & EX.	———	0.05 (0.002)
Valve head thickness	IN. & EX.	———	0.5 (0.02)
Valve seat width	IN. & EX.	0.9 – 1.1 (0.035 – 0.043)	———
Valve head radial runout	IN. & EX.	———	0.03 (0.001)
Valve spring free length (IN. & EX.)	INNER	———	36.8 (1.45)
	OUTER	———	39.8 (1.57)
Valve spring tension (IN. & EX.)	INNER	4.2 – 4.8 kgf (9.26 – 10.58 lbs) at length 29.9 mm (1.18 in)	———
	OUTER	17.0 – 19.6 kg (37.48 – 43.21 lbs) at length 33.4 mm (1.31 in)	———

CAMSHAFT + CYLINDER HEAD

Unit: mm (in)

ITEM	STD/SPEC.		LIMIT
Cam height	IN.	35.480 – 35.530 (1.397 – 1.399)	35.18 (1.385)
	EX.	33.480 – 33.530 (1.318 – 1.320)	33.18 (1.306)
Camshaft journal oil clearance	IN. & EX.	0.032 – 0.066 (0.0013 – 0.0026)	0.150 (0.0059)
Camshaft journal holder I.D.	IN. & EX.	22.012 – 22.025 (0.8666 – 0.8671)	———
Camshaft journal O.D.	IN. & EX.	21.959 – 21.980 (0.8645 – 0.8654)	———
Camshaft runout	IN. & EX.	———	0.10 (0.004)
Cam chain pin (at arrow "3")	16th pin		———
Cylinder head distortion	———		0.05 (0.002)

CYLINDER + PISTON + PISTON RING

Unit: mm (in)

ITEM	STD/SPEC.		LIMIT
Compression pressure	1 500 kPa (15 kgf/cm² 213 psi)		1 100 kPa (11 kgf/cm² 156 psi)
Compression pressure difference	———		200 kPa (2 kgf/cm² 28 psi)
Piston to cylinder clearance	0.055 – 0.065 (0.0022 – 0.0026)		0.120 (0.0047)
Cylinder bore	81.000 – 81.015 (3.1890 – 3.1896)		81.075 (3.1919)
Piston diam.	80.940 – 80.955 (3.1866 – 3.1872) Measure at 20 mm (0.79 in) from the skirt end.		80.88 (3.184)
Cylinder distortion	———		0.05 (0.002)
Piston ring free end gap	1st	Approx. 9.9 (0.39)	7.9 (0.31)
	2nd	Approx. 10.5 (0.41)	8.4 (0.33)
Piston ring end gap	1st	0.20 – 0.35 (0.008 – 0.014)	0.70 (0.028)
	2nd	0.20 – 0.35 (0.008 – 0.014)	0.70 (0.028)
Piston ring to groove clearance	1st	———	0.180 (0.0071)
	2nd	———	0.150 (0.0059)
Piston ring groove width	1st	1.21 – 1.23 (0.0476 – 0.0484)	———
	2nd	1.01 – 1.03 (0.0398 – 0.0406)	———
	Oil	2.01 – 2.03 (0.0791 – 0.0799)	———

ITEM	STD/SPEC.		LIMIT
Piston ring thickness	1st	1.17 – 1.19 (0.0461 – 0.0469)	———
	2nd	0.97 – 0.99 (0.0382 – 0.0390)	———
Piston pin bore	20.002 – 20.008 (0.7875 – 0.7877)		20.030 (0.7886)
Piston pin O.D.	19.992 – 20.000 (0.7871 – 0.7874)		19.980 (0.7866)

CONROD + CRANKSHAFT

Unit: mm (in)

ITEM	STD/SPEC.	LIMIT
Conrod small end I.D.	20.010 – 20.018 (0.7878 – 0.7881)	20.040 (0.7890)
Conrod big end side clearance	0.170 – 0.320 (0.0067– 0.0126)	0.5 (0.02)
Conrod big end width	20.95 – 21.00 (0.825 – 0.827)	———
Crank pin width	42.17 – 42.22 (1.660 – 1.662)	———
Conrod big end oil clearance	0.032 – 0.056 (0.0013 – 0.0022)	0.080 (0.0031)
Crank pin O.D.	37.976 – 38.000 (1.4951 – 1.4960)	———
Crankshaft journal oil clearance	0.008 – 0.035 (0.0003 – 0.0014)	0.080 (0.0031)
Crankshaft journal O.D.	41.985 – 42.000 (1.6529 – 1.6535)	———
Crankshaft thrust bearing thickness	1.925 – 2.175 (0.0758 – 0.0856)	———
Crankshaft thrust clearance	0.050 – 0.110 (0.0020 – 0.0043)	———
Crankshaft runout	———	0.05 (0.002)

OIL PUMP

ITEM	STD/SPEC.	LIMIT
Oil pressure (at 60°C, 140°F)	Above 200 kPa (2.0 kgf/cm², 28 psi) Below 600 kPa (6.0 kgf/cm², 85 psi) at 3 000 r/min	———

CLUTCH

Unit: mm (in)

ITEM	STD/SPEC.		LIMIT
Clutch cable play	10 – 15 (0.4 – 0.6)		———
Clutch release screw	1/4 turn(s) back		———
Drive plate thickness	No.1	2.92 – 3.08 (0.115 – 0.121)	2.62 (0.103)
	No.2	3.42 – 3.58 (0.135 – 0.141)	3.12 (0.123)
Drive plate claw width	No.1 & No.2	15.9 – 16.0 (0.626 – 0.630)	15.1 (0.59)
Driven plate distortion	———		0.10 (0.004)
Clutch spring free length	58.9 (2.32)		56.0 (2.20)

TRANSMISSION + DRIVE CHAIN

Unit: mm (in)

ITEM	STD/SPEC.			LIMIT
Primary reduction ratio	2.088 (71/34)			———
Final reduction ratio	SV650S	* 2.933 (44/15)		———
	SV650	3.000 (45/15)		———
Gear ratios	Low	2.461 (32/13)		———
	2nd	1.777 (32/18)		———
	3rd	1.380 (29/21)		———
	4th	1.125 (27/24)		———
	5th	0.961 (25/26)		———
	Top	0.851 (23/27)		———
Shift fork to groove clearance	0.1 – 0.3 (0.004 – 0.012)			0.5 (0.020)
Shift fork groove width	5.5 – 5.6 (0.217 – 0.220)			———
Shift fork thickness	5.3 – 5.4 (0.209 – 0.213)			———
Drive chain	Type	SV650	DID525V8	———
		SV650S	* DID525V9	———
	Links	SV650	110 Links	———
		SV650S	* 108 Links	———
	20-pitch length	———		319.4 (12.57)
Drive chain slack (on side-stand)	20 – 30 (0.79 – 1.18)			———
Gearshift lever height	SV650S	* 60 – 70 (2.4 – 2.8)		———
	SV650	55 – 60 (2.2 – 2.4)		———

THERMOSTAT + RADIATOR + FAN + COOLANT

ITEM	STD/SPEC.		LIMIT
Thermostat valve opening temperature	Approx. 82°C (179.6°F)		———
Thermostat valve lift	Over 8.0 mm (0.31 in) at 95°C (203°F)		———
Engine coolant temperature switch operating temperature	OFF → ON	Approx. 115°C (239°F)	———
	ON → OFF	Approx. 108°C (226.4°F)	———
Radiator cap valve opening pressure	95 – 125 kPa (0.95 – 1.25 kgf/cm², 13.5 – 17.8 psi)		———
Cooling fan thermo-switch operating temperature	OFF → ON	Approx. 96°C (204.8°F)	———
	ON → OFF	Approx. 91 °C (195.8°F)	———
Engine coolant type	Use an anti-freeze/coolant compatible with aluminum radiator, mixed with distilled water only, at the ratio of 50:50.		———
Engine coolant including reserve	Reserve tank side	Approx. 250 ml (0.26/0.22 US/Imp qt)	———
	Engine side	Approx. 1 350 ml (1.43/1.19 US/Imp qt)	———

CARBURETOR

ITEM	STD/SPEC.	
	E-02, 04, 17, 22, 24, 25, 34	E-03, 28
Carburetor type	MIKUNI BDSR39	←
Bore size	39 mm	←
I.D. No.	20F0	20F2
Idle r/min	1 300 ± 100 r/min	←
Fuel level	16.9 ± 0.5 mm (0.68 ± 0.02 in)	←
Float height	7.0 ± 0.5 mm (0.28 ± 0.02 in)	←
Main jet (M.J.)	#137.5	#137.5
Jet needle (J.N.)	6E38-54-2	6E42-52
Needle jet (N.J.)	P-0	P-0M
Throttle valve (Th.V.)	#95	←
Pilot jet (P.J.)	#17.5	#15
Pilot screw (P.S.)	PRE-SET (2½ turns back)	PRE-SET (3 turns back)
Throttle cable play	2.0 – 4.0 mm (0.08 – 0.16 in)	←

CARBURETOR

ITEM		STD/SPEC.	
		E-33	E-22 (U-Type)
Carburetor type		MIKUNI BDSR39	←
Bore size		39 mm	←
I.D. No.		20F4	20F5
Idle r/min		1 300 ± 100 r/min	←
Fuel level		16.9 ± 0.5 mm (0.68 ± 0.02 in)	←
Float height		7.0 ± 0.5 mm (0.28 ± 0.02 in)	←
Main jet	(M.J.)	#137.5	#137.5
Jet needle	(J.N.)	6E43-54	6E38-54-2
Needle jet	(N.J.)	P-0M	P-0
Throttle valve	(Th.V.)	#95	←
Pilot jet	(P.J.)	#15	#17.5
Pilot screw	(P.S.)	PRE-SET	PRE-SET (3½ turns back)
Throttle cable play		2.0 – 4.0 mm (0.08 – 0.16 in)	←

CARBURETOR

ITEM		STD/SPEC.
		E-18
Carburetor type		MIKUNI BDSR39
Bore size		39 mm
I.D. No.		20F3
Idle r/min		1 300 ± 50 r/min
Fuel level		16.9 ± 0.5 mm (0.68 ± 0.02 in)
Float height		7.0 ± 0.5 mm (0.28 ± 0.02 in)
Main jet	(M.J.)	#137.5
Jet needle	(J.N.)	6E38-54-2
Needle jet	(N.J.)	P-0
Throttle valve	(Th.V.)	#95
Pilot jet	(P.J.)	#15
Pilot screw	(P.S.)	PRE-SET (2¾ turns back)
Throttle cable play		2.0 – 4.0 mm (0.08 – 0.16 in)

ELECTRICAL

ITEM		STD/SPEC.		NOTE
Firing order		1 · 2		
Spark plug	Type	NGK: CR8E DENSO: U24ESR-N		
	Gap	0.7 – 0.8 mm (0.028 – 0.031 in)		
Spark performance		Over 8 mm (0.3 in) at 1 atm.		
Signal coil resistance		140 – 230 Ω		
Signal coil peak voltage		More than 3 V		
Ignition coil resistance	Primary	3.5 – 5.5 Ω		Terminal – Terminal
	Secondary	20 – 31 kΩ		Plug cap – Terminal
Ignition coil primary peak voltage		More than 150 V		
Generator coil resistance		0.2 – 0.55 Ω		
Generator Max. output		Approx. 300 W at 5 000 r/min		
Generator no-load voltage (When cold)		More than 70 V (AC) at 5 000 r/min		
Regulated voltage		13.5 – 15.0 V at 5 000 r/min		
Starter relay resistance		3 – 6 Ω		
Battery	Type designation	YT12A-BS		
	Capacity	12 V 36.0 kC (10Ah)/10HR		
Fuse size	Headlight	HI	15A	
		LO	15A	
	Signal	15A		
	Ignition	10A		
	Meter	10A		
	Main	30A		

WATTAGE

ITEM		STD/SPEC.			
		* SV650S		SV650	
		E-02, 03, 24, 28, 33	The other countries	E-03, 33	The other countries
Headlight	HI	45 W × 2	55 W	60 W	←
	LO	45 W × 2	55 W	55 W	←
Parking or position light		5 W	←		5 W
Brake light/Taillight		21/5 W × 2	←	←	←
Turn signal light		21 W	←	←	←
License light		5 W	←	←	←
Speedometer light		0.84 W × 3	←	1.7 W × 2	←
Turn signal indicator light		3 W	←	1.7 W	←
High beam indicator light		1.7 W	←	←	←
Neutral indicator light		1.7 W	←	←	←
Oil pressure indicator light		1.7 W	←	LED	←
Water temp. indicator light		LED	←	←	←

BRAKE + WHEEL

Unit: mm (in)

ITEM		STD/SPEC.	LIMIT
Rear brake pedal free travel		20 – 30 (0.8 – 1.2)	———
Rear brake pedal height		55 – 65 (2.17 – 2.56)	———
Brake disc thickness	Front	4.5 (0.18)	4.0 (0.16)
	Rear	5.0 (0.20)	4.5 (0.18)
Brake disc runout		———	0.3 (0.012)
Master cylinder bore	Front	15.870 – 15.913 (0.6248 – 0.6265)	———
	Rear	12.700 – 12.743 (0.5000 – 0.5017)	———
Master cylinder piston diam.	Front	15.827 – 15.854 (0.6231 – 0.6242)	———
	Rear	12.657 – 12.684 (0.4983 – 0.4994)	———
Brake caliper cylinder bore	Front	30.230 – 30.306 (1.1902 – 1.1931)	———
	Rear	38.180 – 38.256 (1.5031 – 1.5061)	———
Brake caliper piston diam.	Front	30.150 – 30.200 (1.1870 – 1.1890)	———
	Rear	38.098 – 38.148 (1.4999 – 1.5019)	———
Brake fluid type		DOT 4	
Wheel rim runout	Axial	———	2.0 (0.08)
	Radial	———	2.0 (0.08)
Wheel rim size	Front	17 × MT3.50	———
	Rear	17 × MT4.50	———
Wheel axle runout	Front	———	0.25 (0.010)
	Rear	———	0.25 (0.010)

TIRE

Unit: mm (in)

ITEM		STD/SPEC.	LIMIT
Cold inflation tire pressure (Solo riding)	Front	225 kPa (2.25 kgf/cm², 33 psi)	———
	Rear	250 kPa (2.50 kgf/cm², 36 psi)	———
Cold inflation tire pressure (Dual riding)	Front	225 kPa (2.25 kgf/cm², 33 psi)	———
	Rear	250 kPa (2.50 kgf/cm², 36 psi)	———
Tire size	Front	120/60ZR17 (55W)	———
	Rear	160/60ZR17 (69W)	———
Tire type	Front	METZELER: MEZ4 FRONT	———
	Rear	METZELER: MEZ4	———
Tire tread depth	Front	———	1.6 (0.06)
	Rear	———	2.0 (0.08)

SUSPENSION

Unit: mm (in)

ITEM		STD/SPEC.	LIMIT
Front fork stroke		130 (5.1)	———
Front fork spring free length		314.6 (12.39)	308 (12.13)
Front fork oil level (without spring, inner tube fully compressed)	E-03, 33	102 (4.02)	———
	Others	104 (4.09)	———
Front fork oil type		SUZUKI FORK OIL G10 (#10) or equivalent fork oil	———
Front fork oil capacity (each leg)	E-03, 33	491 ml (16.6/17.3 US/Imp oz)	———
	Others	489 ml (16.5/17.2 US/Imp oz)	———
Rear shock absorber spring adjuster	SV650S	* 4/7	———
	SV650	2/7	———
Rear wheel travel		125 (4.9)	———
Swingarm pivot shaft runout		———	0.3 (0.01)

FUEL + OIL

ITEM	STD/SPEC.		NOTE
Fuel type	Use only unleaded gasoline of at least 87 pump octane ($\frac{R+M}{2}$) or 91 octane or higher rated by the research method. Gasoline containing MTBE (Methyl Tertiary Butyl Ether), less than 10% ethanol, or less than 5% methanol with appropriate cosolvents and corrosion inhibitor is permissible.		E-03, 28, 33
	Gasoline used should be graded 91 octane or higher. An unleaded gasoline is recommended.		The others
Fuel tank capacity	15 L (4.0/3.3 US/Imp gal)		E-33
	16 L (4.2/3.5 US/Imp gal)		The others
Engine oil type	SAE 10W/40, API SF or SG		
Engine oil capacity	Change	2 300 ml (2.4/2.0 US/Imp qt)	
	Filter change	2 400 ml (2.5/2.1US/Imp qt)	
	Overhaul	3 000 ml (3.2/2.6 US/Imp qt)	

PRIMARY DRIVEN GEAR CONSTRUCTION

- The primary driven gear washer has been united to the spacer from SV650K1/SK1 ('01-model) as shown in the illustration.

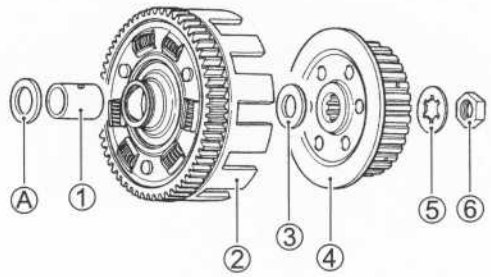

Ⓐ Washer
① Spacer
② Primary driven gear assembly
③ Washer
④ Clutch sleeve hub
⑤ Lock washer
⑥ Clutch sleeb hub nut

X, Y-MODELS

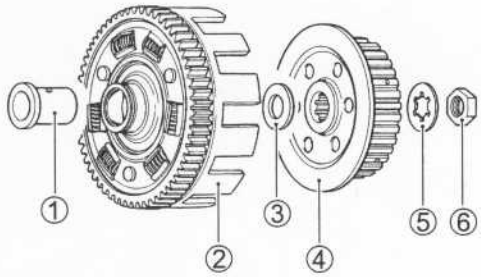

① Spacer
② Primary driven gear assembly
③ Washer
④ Clutch sleeve hub
⑤ Lock washer
⑥ Clutch sleeb hub nut

From K1-MODEL

SV650K2/SK2 ('02-MODEL)

This chapter describes service data, service specifications and servicing procedures which differ from those of the SV650K1/SK1 ('01-model).

CONTENTS

SPECIFICATIONS 13- 2
SERVICE DATA 13- 4
FRONT FORK 13-14
  CONSTRUCTION 13-14
  SUSPENSION SETTING 13-15
WIRING DIAGRAM 13-16
WIRE HARNESS ROUTING 13-23

NOTE:
Any difference between the SV650K1/SK1 ('01-model) and SV650K2/SK2 ('02-model) in specifications and service data are clearly indicated with an asterisk (*).

SPECIFICATIONS

MODEL: SV650

DIMENSIONS AND DRY MASS

Overall length	2 120 mm (83.5 in) E-17, 18
	2 070 mm (81.5 in) ..... Others
Overall width	750 mm (29.5 in)
Overall height	1 060 mm (41.7 in)
Wheelbase	1 430 mm (56.3 in)
Ground clearance	140 mm (5.5 in)
Seat height	805 mm (31.7 in)
Dry mass	165 kg (363 lbs)

ENGINE

Type	4-stroke, liquid-cooled, DOHC, 90°-degree V-twin
Number of cylinders	2
Bore	81.0 mm (3.189 in)
Stroke	62.6 mm (2.465 in)
Displacement	645 cm^3 (39.4 cu. in)
Compression ratio	11.5 : 1
Carburetor	MIKUNI BDSR39, twin
Air cleaner	Non-woven fabric element
Starter system	Electric
Lubrication system	Wet sump
Idle speed	1 200 – 1 400 r/min

TRANSMISSION

Clutch	Wet multi-plate type
Transmission	6-speed constant mesh
Gearshift pattern	1-down, 5-up
Primary reduction ratio	2.088 (71/34)
Final reduction ratio	3.000 (45/15)
Gear ratios, Low	2.461 (32/13)
2nd	1.777 (32/18)
3rd	1.380 (29/21)
4th	1.125 (27/24)
5th	0.961 (25/26)
Top	0.851 (23/27)
Drive chain	DID525V8, 110 links

CHASSIS

Front suspension	Telescopic, coil spring, oil damped
Rear suspension	Link type, coil spring, oil damped
Front fork stroke	130 mm (5.1 in)
Rear wheel travel	125 mm (4.9 in)
Caster	25°
Trail	100 mm (3.94 in)
Steering angle	33° (right & left)
Turning radius	2.9 m (9.5 ft)
Front brake	Disk brake, twin
Rear brake	Disk brake
Front tire size	120/60 ZR17 (55W), tubeless
Rear tire size	160/60 ZR17 (69W), tubeless

ELECTRICAL

Ignition type	Electronic ignition (Transistorized)
Ignition timing	5° B.T.D.C. at 1 300 r/min
Spark plug	NGK CR8E or DENSO U24ESR-N
Battery	12V 36.0 kC (10Ah)/10 HR
Generator	Three-phase A.C. generator
Main fuse	30A
Fuse	15/15/15/10/10A
Headlight	12V 60/55W (H4)
Position/parking light	12V 5W ..... Except E-03, 24, 33
Brake light/Taillight	12V 21/5W × 2
License plate light	12V 5W
Turn signal light	12V 21W
Speedometer light	12V 1.7W × 2
Turn signal indicator light	12V 1.7W
Neutral indicator light	12V 1.7W
High beam indicator light	12V 1.7W
Oil pressure indicator light	LED
Fuel indicator light	12V 1.7W
Water temp. indicator light	LED

CAPACITIES

Fuel tank, including reserve	15 L (4.0/3.3 US/Imp gal) E-33
	16 L (4.2/3.5 US/Imp gal) ..... Others
Engine oil, oil change	2 300 ml (2.4/2.0 US/Imp qt)
with filter change	2 400 ml (2.5/2.1 US/Imp qt)
overhaul	2 700 ml (2.9/2.4 US/Imp qt)
Coolant	1.6 L (1.7/1.4 US/Imp qt)
Front fork oil (each leg)	*480 ml (16.2/16.9 US/Imp oz) E-03, 33
	*478 ml (16.2/16.8 US/Imp oz) ..... Others

MODEL: SV650S

DIMENSIONS AND DRY MASS

Overall length	2 120 mm (83.5 in) E-17, 18
	2 045 mm (80.5 in) ..... Others
Overall width	740 mm (29.1 in)
Overall height	1 130 mm (44.5 in)
Wheelbase	1 420 mm (55.9 in)
Ground clearance	140 mm (5.5 in)
Seat height	805 mm (31.7 in)
Dry mass	169 kg (372 lbs)

ENGINE

Type	4-stroke, liquid-cooled, DOHC, 90°-degree V-twin
Number of cylinders	2
Bore	81.0 mm (3.189 in)
Stroke	62.6 mm (2.465 in)
Displacement	645 cm³ (39.4 cu. in)
Compression ratio	11.5 : 1
Carburetor	MIKUNI BDSR39, twin
Air cleaner	Non-woven fabric element
Starter system	Electric
Lubrication system	Wet sump
Idle speed	1 200 – 1 400 r/min

TRANSMISSION

Clutch	Wet multi-plate type
Transmission	6-speed constant mesh
Gearshift pattern	1-down, 5-up
Primary reduction ratio	2.088 (71/34)
Final reduction ratio	2.933 (44/15)
Gear ratios, Low	2.461 (32/13)
2nd	1.777 (32/18)
3rd	1.380 (29/21)
4th	1.125 (27/24)
5th	0.961 (25/26)
Top	0.851 (23/27)
Drive chain	DID525V9, 108 links

CHASSIS

Front suspension	Telescopic, coil spring, oil damped
Rear suspension	Link type, coil spring, oil damped
Front fork stroke	130 mm (5.1 in)
Rear wheel travel	125 mm (4.9 in)
Caster	25°
Trail	100 mm (3.94 in)
Steering angle	30° (right & left)
Turning radius	3.1 m (10.2 ft)
Front brake	Disk brake, twin
Rear brake	Disk brake
Front tire size	120/60 ZR17 (55W), tubeless
Rear tire size	160/60 ZR17 (69W), tubeless

ELECTRICAL

Ignition type	Electronic ignition (Transistorized)
Ignition timing	5° B.T.D.C. at 1 300 r/min
Spark plug	NGK CR8E or DENSO U24ESR-N
Battery	12V 36.0 kC (10Ah)/10 HR
Generator	Three-phase A.C. generator
Main fuse	30A
Fuse	15/15/15/10/10A
Headlight	12V 45/45W × 2 ..... E-02, 03, 24, 28, 33
	12V 55+55/55W ..... Others
Position light	12V 5W
Brake light/Taillight	12V 21/5W × 2
License plate light	12V 5W
Turn signal light	12V 21W
Speedometer light	12V 0.84W × 2
Turn signal indicator light	12V 3W
Neutral indicator light	12V 1.7W
High beam indicator light	12V 1.7W
Oil pressure indicator light	12V 1.7W
Fuel indicator light	12V 1.7W

CAPACITIES

Fuel tank, including reserve	15 L (4.0/3.3 US/Imp gal) E-33
	16 L (4.2/3.5 US/Imp gal) ..... Others
Engine oil, oil change	2 300 ml (2.4/2.0 US/Imp qt)
with filter change	2 400 ml (2.5/2.1 US/Imp qt)
overhaul	2 700 ml (2.9/2.4 US/Imp qt)
Coolant	1.6 L (1.7/1.4 US/Imp qt)
Front fork oil (each leg)	*480 ml (16.2/16.9 US/Imp oz) E-03, 33
	*478 ml (16.2/16.8 US/Imp oz) ..... Others

SERVICE DATA

VALVE + GUIDE

Unit: mm (in)

ITEM		STD/SPEC.	LIMIT
Valve diam.	IN.	31 (1.2)	———
	EX.	25.5 (1.0)	———
Valve clearance (When cold)	IN.	0.1 – 0.2 (0.004 – 0.008)	———
	EX.	0.2 – 0.3 (0.008 – 0.012)	———
Valve guide to valve stem clearance	IN.	0.020 – 0.047 (0.0008 – 0.0019)	———
	EX.	0.030 – 0.057 (0.0012 – 0.0022)	———
Valve guide I.D.	IN. & EX.	4.500 – 4.512 (0.1772 – 0.1776)	———
Valve stem O.D.	IN.	4.465 – 4.480 (0.1758 – 0.1764)	———
	EX.	4.455 – 4.470 (0.1754 – 0.1760)	———
Valve stem deflection	IN. & EX.	———	0.35 (0.014)
Valve stem runout	IN. & EX.	———	0.05 (0.002)
Valve head thickness	IN. & EX.	———	0.5 (0.02)
Valve seat width	IN. & EX.	0.9 – 1.1 (0.035 – 0.043)	———
Valve head radial runout	IN. & EX.	———	0.03 (0.001)
Valve spring free length (IN. & EX.)	INNER	———	36.8 (1.45)
	OUTER	———	39.8 (1.57)
Valve spring tension (IN. & EX.)	INNER	4.2 – 4.8 kgf (9.26 – 10.58 lbs) at length 29.9 mm (1.18 in)	———
	OUTER	17.0 – 19.6 kg (37.48 – 43.21 lbs) at length 33.4 mm (1.31 in)	———

CAMSHAFT + CYLINDER HEAD

Unit: mm (in)

ITEM	STD/SPEC.		LIMIT
Cam height	IN.	35.480 – 35.530 (1.397 – 1.399)	35.18 (1.385)
	EX.	33.480 – 33.530 (1.318 – 1.320)	33.18 (1.306)
Camshaft journal oil clearance	IN. & EX.	0.032 – 0.066 (0.0013 – 0.0026)	0.150 (0.0059)
Camshaft journal holder I.D.	IN. & EX.	22.012 – 22.025 (0.8666 – 0.8671)	———
Camshaft journal O.D.	IN. & EX.	21.959 – 21.980 (0.8645 – 0.8654)	———
Camshaft runout	IN. & EX.	———	0.10 (0.004)
Cam chain pin (at arrow "3")	16th pin		———
Cylinder head distortion	———		0.05 (0.002)

CYLINDER + PISTON + PISTON RING

Unit: mm (in)

ITEM	STD/SPEC.		LIMIT
Compression pressure	1 500 kPa (15 kgf/cm² 213 psi)		1 100 kPa (11 kgf/cm² 156 psi)
Compression pressure difference	———		200 kPa (2 kgf/cm² 28 psi)
Piston to cylinder clearance	0.055 – 0.065 (0.0022 – 0.0026)		0.120 (0.0047)
Cylinder bore	81.000 – 81.015 (3.1890 – 3.1896)		81.075 (3.1919)
Piston diam.	80.940 – 80.955 (3.1866 – 3.1872) Measure at 20 mm (0.79 in) from the skirt end.		80.88 (3.184)
Cylinder distortion	———		0.05 (0.002)
Piston ring free end gap	1st	Approx. 9.9 (0.39)	7.9 (0.31)
	2nd	Approx. 10.5 (0.41)	8.4 (0.33)
Piston ring end gap	1st	0.20 – 0.35 (0.008 – 0.014)	0.70 (0.028)
	2nd	0.20 – 0.35 (0.008 – 0.014)	0.70 (0.028)
Piston ring to groove clearance	1st	———	0.180 (0.0071)
	2nd	———	0.150 (0.0059)
Piston ring groove width	1st	1.21 – 1.23 (0.0476 – 0.0484)	———
	2nd	1.01 – 1.03 (0.0398 – 0.0406)	———
	Oil	2.01 – 2.03 (0.0791 – 0.0799)	———

ITEM	STD/SPEC.		LIMIT
Piston ring thickness	1st	1.17 – 1.19 (0.0461 – 0.0469)	———
	2nd	0.97 – 0.99 (0.0382 – 0.0390)	———
Piston pin bore	20.002 – 20.008 (0.7875 – 0.7877)		20.030 (0.7886)
Piston pin O.D.	19.992 – 20.000 (0.7871 – 0.7874)		19.980 (0.7866)

CONROD + CRANKSHAFT

Unit: mm (in)

ITEM	STD/SPEC.	LIMIT
Conrod small end I.D.	20.010 – 20.018 (0.7878 – 0.7881)	20.040 (0.7890)
Conrod big end side clearance	0.170 – 0.320 (0.0067– 0.0126)	0.5 (0.02)
Conrod big end width	20.95 – 21.00 (0.825 – 0.827)	———
Crank pin width	42.17 – 42.22 (1.660 – 1.662)	———
Conrod big end oil clearance	0.032 – 0.056 (0.0013 – 0.0022)	0.080 (0.0031)
Crank pin O.D.	37.976 – 38.000 (1.4951 – 1.4960)	———
Crankshaft journal oil clearance	0.008 – 0.035 (0.0003 – 0.0014)	0.080 (0.0031)
Crankshaft journal O.D.	41.985 – 42.000 (1.6529 – 1.6535)	———
Crankshaft thrust bearing thickness	1.925 – 2.175 (0.0758 – 0.0856)	———
Crankshaft thrust clearance	0.050 – 0.110 (0.0020 – 0.0043)	———
Crankshaft runout	———	0.05 (0.002)

OIL PUMP

ITEM	STD/SPEC.	LIMIT
Oil pressure (at 60°C, 140°F)	Above 200 kPa (2.0 kgf/cm², 28 psi) Below 600 kPa (6.0 kgf/cm², 85 psi) at 3 000 r/min	———

CLUTCH

Unit: mm (in)

ITEM	STD/SPEC.		LIMIT
Clutch cable play	10 – 15 (0.4 – 0.6)		———
Clutch release screw	1/4 turn(s) back		———
Drive plate thickness	No.1	2.92 – 3.08 (0.115 – 0.121)	2.62 (0.103)
	No.2	3.42 – 3.58 (0.135 – 0.141)	3.12 (0.123)
Drive plate claw width	No.1 & No.2	15.9 – 16.0 (0.626 – 0.630)	15.1 (0.59)
Driven plate distortion	———		0.10 (0.004)
Clutch spring free length	58.9 (2.32)		56.0 (2.20)

TRANSMISSION + DRIVE CHAIN

Unit: mm (in)

ITEM	STD/SPEC.			LIMIT
Primary reduction ratio	2.088 (71/34)			———
Final reduction ratio	SV650S	2.933 (44/15)		———
	SV650	3.000 (45/15)		———
Gear ratios	Low	2.461 (32/13)		———
	2nd	1.777 (32/18)		———
	3rd	1.380 (29/21)		———
	4th	1.125 (27/24)		———
	5th	0.961 (25/26)		———
	Top	0.851 (23/27)		———
Shift fork to groove clearance	0.1 – 0.3 (0.004 – 0.012)			0.5 (0.020)
Shift fork groove width	5.5 – 5.6 (0.217 – 0.220)			———
Shift fork thickness	5.3 – 5.4 (0.209 – 0.213)			———
Drive chain	Type	SV650	DID525V8	———
		SV650S	DID525V9	———
	Links	SV650	110 Links	———
		SV650S	108 Links	———
	20-pitch length	———		319.4 (12.57)
Drive chain slack (on side-stand)	20 – 30 (0.79 – 1.18)			———
Gearshift lever height	SV650S	60 – 70 (2.4 – 2.8)		———
	SV650	55 – 60 (2.2 – 2.4)		———

THERMOSTAT + RADIATOR + FAN + COOLANT

ITEM	STD/SPEC.		LIMIT
Thermostat valve opening temperature	Approx. 82°C (179.6°F)		—
Thermostat valve lift	Over 8.0 mm (0.31 in) at 95°C (203°F)		—
Engine coolant temperature switch operating temperature	OFF → ON	Approx. 115°C (239°F)	—
	ON → OFF	Approx. 108°C (226.4°F)	—
Radiator cap valve opening pressure	95 – 125 kPa (0.95 – 1.25 kgf/cm², 13.5 – 17.8 psi)		—
Cooling fan thermo-switch operating temperature	OFF → ON	Approx. 96°C (204.8°F)	—
	ON → OFF	Approx. 91 °C (195.8°F)	—
Engine coolant type	Use an anti-freeze/coolant compatible with aluminum radiator, mixed with distilled water only, at the ratio of 50:50.		—
Engine coolant including reserve	Reserve tank side	Approx. 250 ml (0.26/0.22 US/Imp qt)	—
	Engine side	Approx. 1 350 ml (1.43/1.19 US/Imp qt)	—

CARBURETOR

ITEM	STD/SPEC.	
	E-02, 04, 17, 22, 24, 25, 34	E-03, 28
Carburetor type	MIKUNI BDSR39	←
Bore size	39 mm	←
I.D. No.	20F0	20F2
Idle r/min	1 300 ± 100 r/min	←
Fuel level	16.9 ± 0.5 mm (0.68 ± 0.02 in)	←
Float height	7.0 ± 0.5 mm (0.28 ± 0.02 in)	←
Main jet (M.J.)	#137.5	#137.5
Jet needle (J.N.)	6E38-54-2	6E42-52
Needle jet (N.J.)	P-0	P-0M
Throttle valve (Th.V.)	#95	←
Pilot jet (P.J.)	#17.5	#15
Pilot screw (P.S.)	PRE-SET (2½ turns back)	PRE-SET (3 turns back)
Throttle cable play	2.0 – 4.0 mm (0.08 – 0.16 in)	←

CARBURETOR

ITEM		STD/SPEC.	
		E-33	E-22 (U-Type)
Carburetor type		MIKUNI BDSR39	←
Bore size		39 mm	←
I.D. No.		20F4	20F5
Idle r/min		1 300 ± 100 r/min	←
Fuel level		16.9 ± 0.5 mm (0.68 ± 0.02 in)	←
Float height		7.0 ± 0.5 mm (0.28 ± 0.02 in)	←
Main jet	(M.J.)	#137.5	#137.5
Jet needle	(J.N.)	6E43-54	6E38-54-2
Needle jet	(N.J.)	P-0M	P-0
Throttle valve	(Th.V.)	#95	←
Pilot jet	(P.J.)	#15	#17.5
Pilot screw	(P.S.)	PRE-SET	PRE-SET (3½ turns back)
Throttle cable play		2.0 – 4.0 mm (0.08 – 0.16 in)	←

CARBURETOR

ITEM		STD/SPEC.
		E-18
Carburetor type		MIKUNI BDSR39
Bore size		39 mm
I.D. No.		20F3
Idle r/min		1 300 ± 50 r/min
Fuel level		16.9 ± 0.5 mm (0.68 ± 0.02 in)
Float height		7.0 ± 0.5 mm (0.28 ± 0.02 in)
Main jet	(M.J.)	#137.5
Jet needle	(J.N.)	6E38-54-2
Needle jet	(N.J.)	P-0
Throttle valve	(Th.V.)	#95
Pilot jet	(P.J.)	#15
Pilot screw	(P.S.)	PRE-SET (2¾ turns back)
Throttle cable play		2.0 – 4.0 mm (0.08 – 0.16 in)

ELECTRICAL

ITEM		STD/SPEC.			NOTE
Firing order		1 · 2			
Spark plug		Type	NGK: CR8E DENSO: U24ESR-N		
		Gap	0.7 – 0.8 mm (0.028 – 0.031 in)		
Spark performance		Over 8 mm (0.3 in) at 1 atm.			
Signal coil resistance		140 – 230 Ω			
Signal coil peak voltage		More than 3 V			
Ignition coil resistance		Primary	3.5 – 5.5 Ω		Terminal – Terminal
		Secondary	20 – 31 kΩ		Plug cap – Terminal
Ignition coil primary peak voltage		More than 150 V			
Generator coil resistance		0.2 – 0.55 Ω			
Generator Max. output		* Approx. 275 W at 5 000 r/min			
Generator no-load voltage (When cold)		More than 70 V (AC) at 5 000 r/min			
Regulated voltage		13.5 – 15.0 V at 5 000 r/min			
Starter relay resistance		3 – 6 Ω			
Battery	Type designation	YT12A-BS			
	Capacity	12 V 36.0 kC (10Ah)/10HR			
Fuse size		Headlight	HI	15A	
			LO	15A	
		Signal		15A	
		Ignition		10A	
		Meter		10A	
		Main		30A	

WATTAGE

ITEM		STD/SPEC.			
		SV650S		SV650	
		E-02, 03, 24, 28, 33	The other countries	E-03, 33	The other countries
Headlight	HI	45 W × 2	55 W	60 W	←
	LO	45 W × 2	55 W	55 W	←
Parking or position light		5 W	←		5 W
Brake light/Taillight		21/5 W × 2	←	←	←
Turn signal light		21 W	←	←	←
License light		5 W	←	←	←
Speedometer light		0.84 W × 3	←	1.7 W × 2	←
Turn signal indicator light		3 W	←	1.7 W	←
High beam indicator light		1.7 W	←	←	←
Neutral indicator light		1.7 W	←	←	←
Oil pressure indicator light		1.7 W	←	LED	←
Water temp. indicator light		LED	←	←	←

BRAKE + WHEEL

Unit: mm (in)

ITEM		STD/SPEC.	LIMIT
Rear brake pedal free travel		20 – 30 (0.8 – 1.2)	———
Rear brake pedal height		55 – 65 (2.17 – 2.56)	———
Brake disc thickness	Front	4.5 (0.18)	4.0 (0.16)
	Rear	5.0 (0.20)	4.5 (0.18)
Brake disc runout		———	0.3 (0.012)
Master cylinder bore	Front	15.870 – 15.913 (0.6248 – 0.6265)	———
	Rear	12.700 – 12.743 (0.5000 – 0.5017)	———
Master cylinder piston diam.	Front	15.827 – 15.854 (0.6231 – 0.6242)	———
	Rear	12.657 – 12.684 (0.4983 – 0.4994)	———
Brake caliper cylinder bore	Front	30.230 – 30.306 (1.1902 – 1.1931)	———
	Rear	38.180 – 38.256 (1.5031 – 1.5061)	———
Brake caliper piston diam.	Front	30.150 – 30.200 (1.1870 – 1.1890)	———
	Rear	38.098 – 38.148 (1.4999 – 1.5019)	———
Brake fluid type		DOT 4	
Wheel rim runout	Axial	———	2.0 (0.08)
	Radial	———	2.0 (0.08)
Wheel rim size	Front	17 × MT3.50, 17M/C × MT3.50	———
	Rear	17 × MT4.50, 17M/C × MT4.50	———
Wheel axle runout	Front	———	0.25 (0.010)
	Rear	———	0.25 (0.010)

TIRE

Unit: mm (in)

ITEM	STD/SPEC.		LIMIT
Cold inflation tire pressure (Solo riding)	Front	225 kPa (2.25 kgf/cm², 33 psi)	———
	Rear	250 kPa (2.50 kgf/cm², 36 psi)	———
Cold inflation tire pressure (Dual riding)	Front	225 kPa (2.25 kgf/cm², 33 psi)	———
	Rear	250 kPa (2.50 kgf/cm², 36 psi)	———
Tire size	Front	120/60ZR17 (55W), 120/60ZR17M/C (55W)	———
	Rear	160/60ZR17 (69W), 160/60ZR17M/C (69W)	———
Tire type	Front	METZELER: MEZ4 FRONT	———
	Rear	METZELER: MEZ4	———
Tire tread depth	Front	———	1.6 (0.06)
	Rear	———	2.0 (0.08)

SUSPENSION

Unit: mm (in)

ITEM	STD/SPEC.		LIMIT
Front fork stroke	130 (5.1)		———
Front fork spring free length	314.6 (12.39)		308 (12.13)
Front fork oil level (without spring, inner tube fully compressed)	E-03, 33	* 113 (4.45)	———
	Others	* 115 (4.53)	———
Front fork oil type	SUZUKI FORK OIL G10 (#10) or equivalent fork oil		———
Front fork oil capacity (each leg)	E-03, 33	* 480 ml (16.2/16.9 US/Imp oz)	———
	Others	* 478 ml (16.2/16.8 US/Imp oz)	———
Rear shock absorber spring adjuster	SV650S	4/7	———
	SV650	2/7	———
Rear wheel travel	125 (4.9)		———
Swingarm pivot shaft runout	———		0.3 (0.01)

FUEL + OIL

ITEM	STD/SPEC.		NOTE
Fuel type	Use only unleaded gasoline of at least 87 pump octane ($\frac{R+M}{2}$) or 91 octane or higher rated by the research method. Gasoline containing MTBE (Methyl Tertiary Butyl Ether), less than 10% ethanol, or less than 5% methanol with appropriate cosolvents and corrosion inhibitor is permissible.		E-03, 28, 33
	Gasoline used should be graded 91 octane or higher. An unleaded gasoline is recommended.		The others
Fuel tank capacity	15 L (4.0/3.3 US/Imp gal)		E-33
	16 L (4.2/3.5 US/Imp gal)		The others
Engine oil type	SAE 10W/40, API SF or SG		
Engine oil capacity	Change	2 300 ml (2.4/2.0 US/Imp qt)	
	Filter change	2 400 ml (2.5/2.1US/Imp qt)	
	Overhaul	2 700 ml (2.9/2.4 US/Imp qt)	

FRONT FORK
CONSTRUCTION

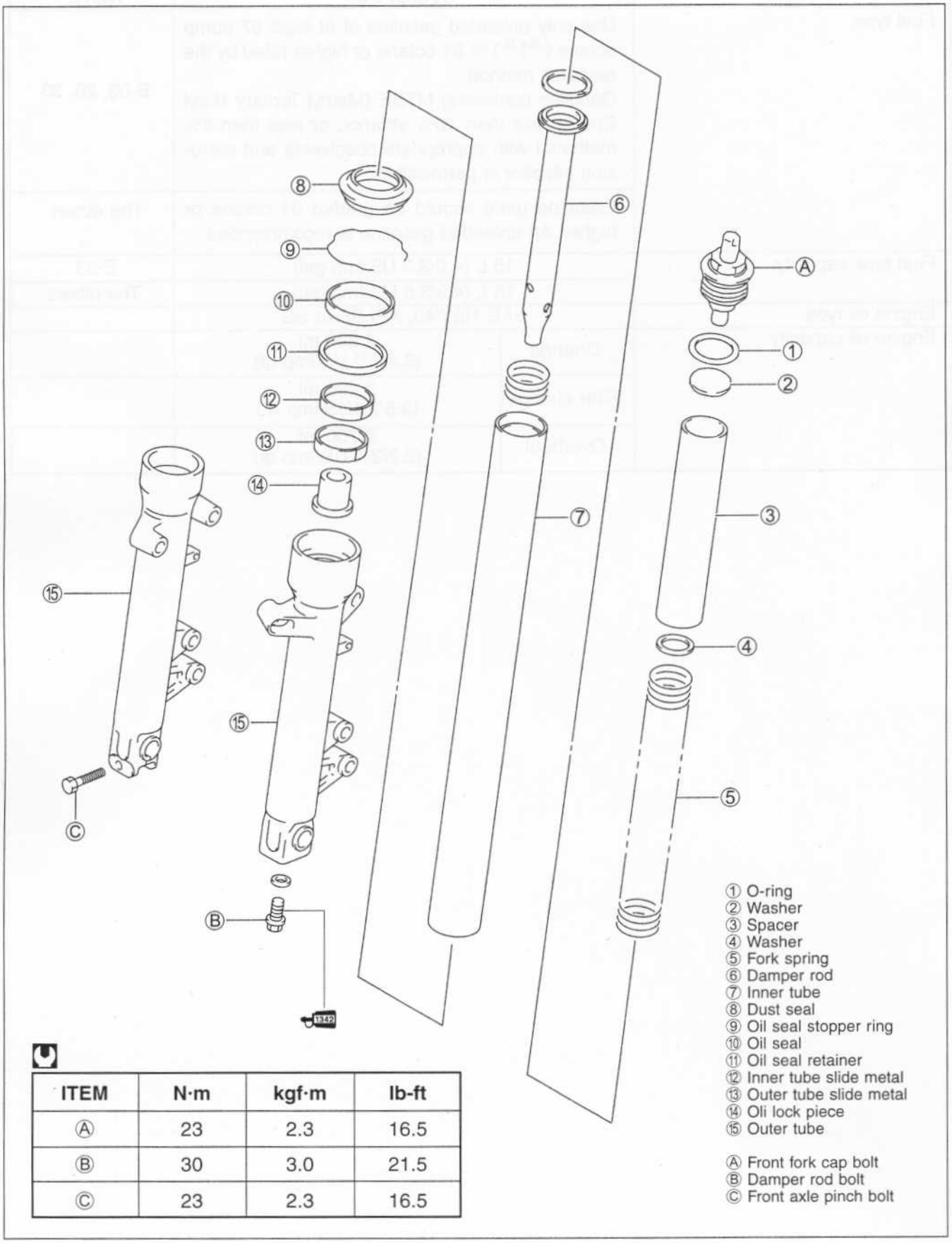

ITEM	N·m	kgf·m	lb-ft
Ⓐ	23	2.3	16.5
Ⓑ	30	3.0	21.5
Ⓒ	23	2.3	16.5

SUSPENSION SETTING

After installing the front fork, adjust the spring pre-load as follows.

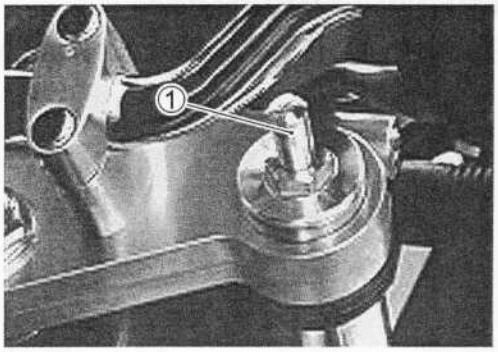

SPRING PRE-LOAD ADJUSTMENT

To change the spring pre-load, turn the adjuster ① clockwise or counterclockwise.

There are seven grooved lines on the side of the spring adjuster. Position 1 provides the maximum spring pre-load and position 7 provides the minimum spring pre-load.

(STD position: 6)

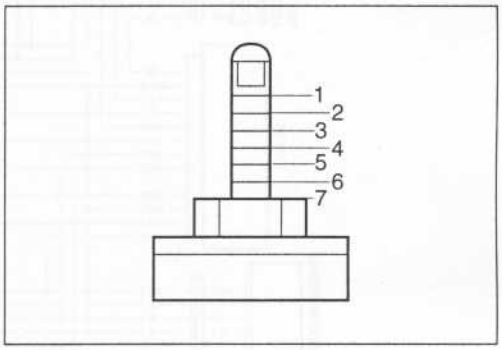

STANDARD SPRING PRELOAD SETTING

		Front	
		SV650	SV650S
Solo riding	Softer	7	7
	Standard	6	6
	Stiffer	4	5
Dual riding		6	6

⚠ WARNING

Be sure to adjust the spring pre-load and damping force on both front fork legs equally.

WIRING DIAGRAM
SV650 (FOR E-02, 04, 17, 18, 22, 25 AND 34 MODELS)

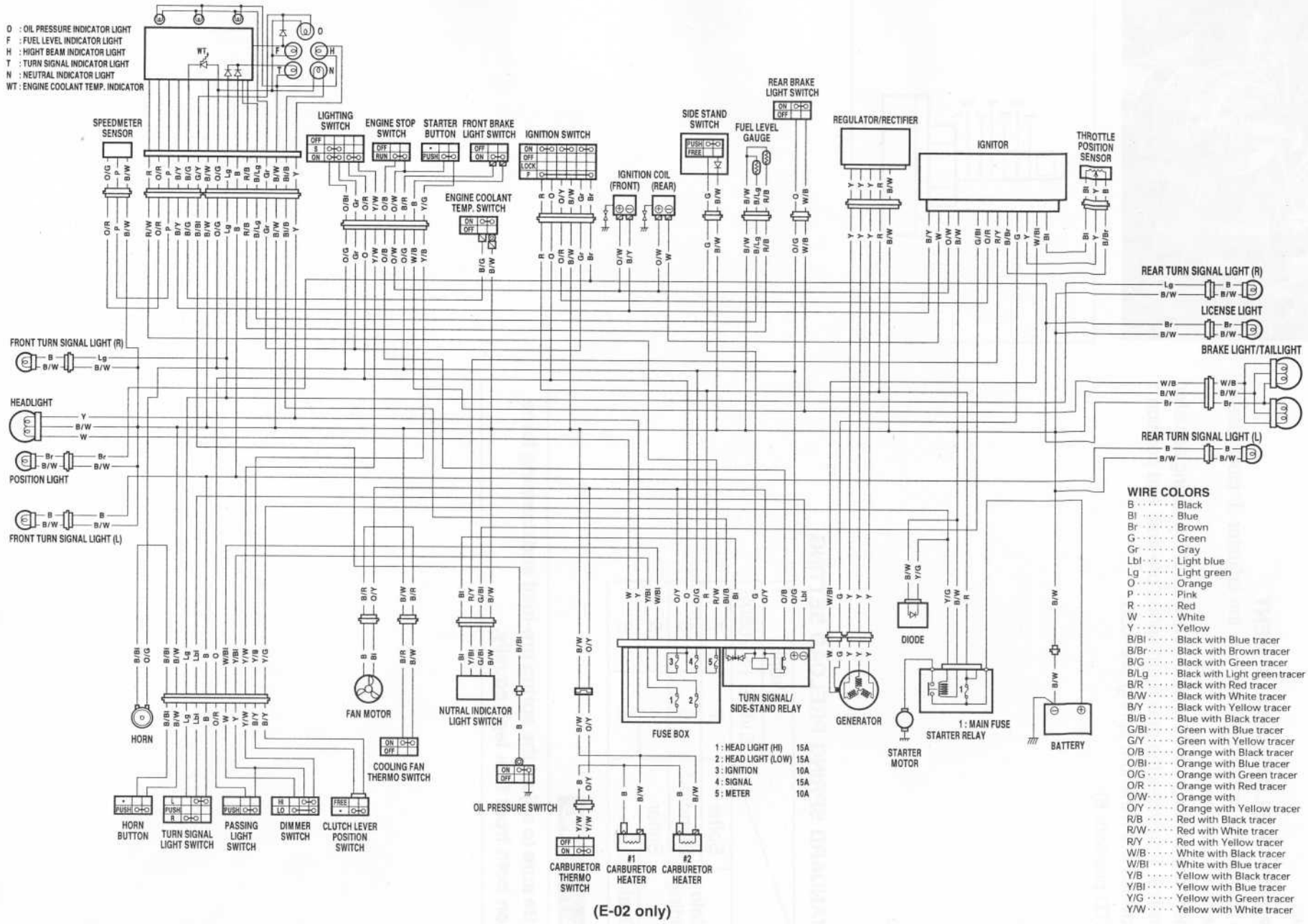

WIRE COLORS

- B ····· Black
- Bl ····· Blue
- Br ····· Brown
- G ····· Green
- Gr ····· Gray
- Lbl ····· Light blue
- Lg ····· Light green
- O ····· Orange
- P ····· Pink
- R ····· Red
- W ····· White
- Y ····· Yellow
- B/Bl ····· Black with Blue tracer
- B/Br ····· Black with Brown tracer
- B/G ····· Black with Green tracer
- B/Lg ····· Black with Light green tracer
- B/R ····· Black with Red tracer
- B/W ····· Black with White tracer
- B/Y ····· Black with Yellow tracer
- Bl/B ····· Blue with Black tracer
- G/Bl ····· Green with Blue tracer
- G/Y ····· Green with Yellow tracer
- O/B ····· Orange with Black tracer
- O/Bl ····· Orange with Blue tracer
- O/G ····· Orange with Green tracer
- O/R ····· Orange with Red tracer
- O/W ····· Orange with
- O/Y ····· Orange with Yellow tracer
- R/B ····· Red with Black tracer
- R/W ····· Red with White tracer
- R/Y ····· Red with Yellow tracer
- W/B ····· White with Black tracer
- W/Bl ····· White with Blue tracer
- Y/B ····· Yellow with Black tracer
- Y/Bl ····· Yellow with Blue tracer
- Y/G ····· Yellow with Green tracer
- Y/W ····· Yellow with White tracer

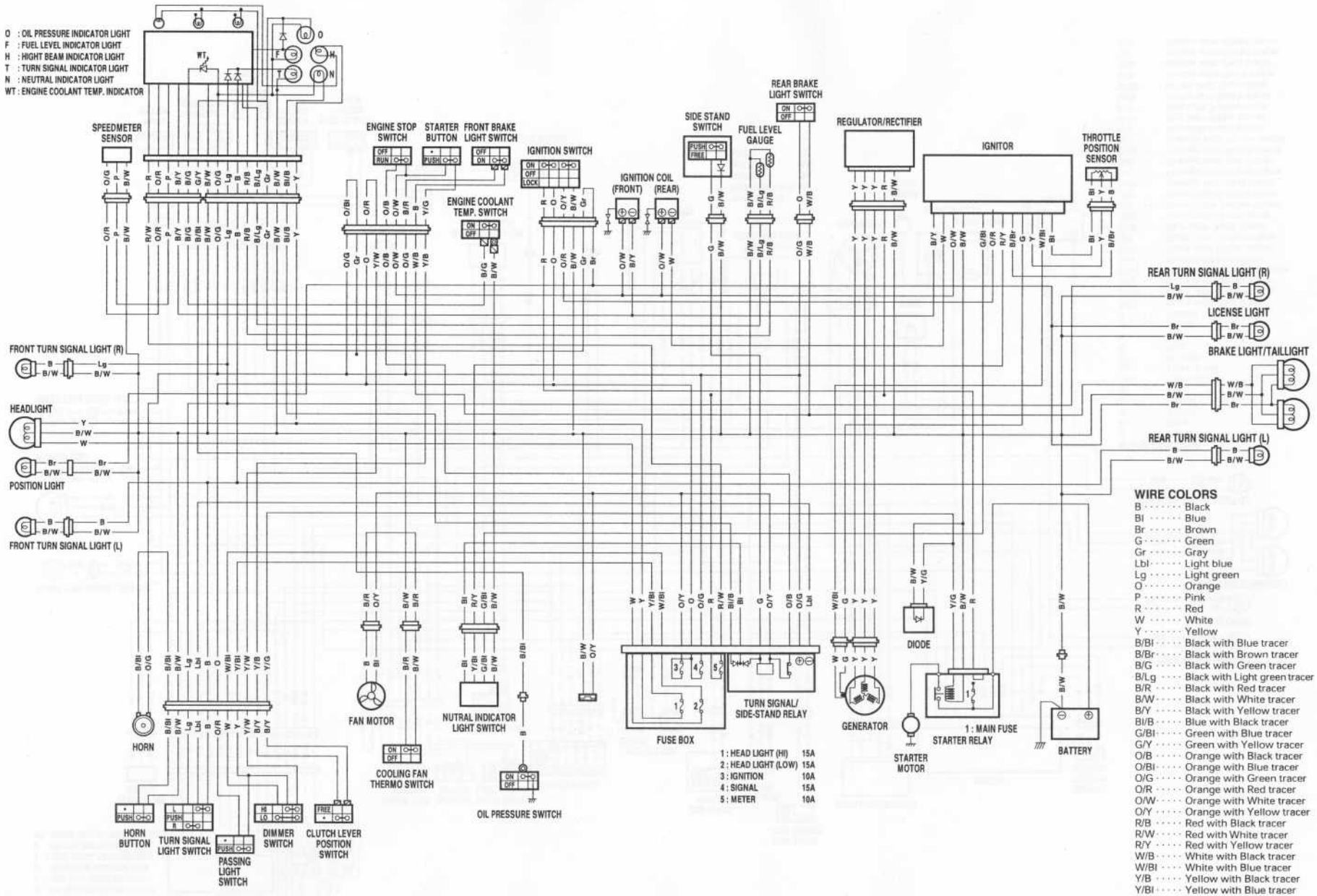

WIRE COLORS

- B ····· Black
- Bl ····· Blue
- Br ····· Brown
- G ····· Green
- Gr ····· Gray
- Lbl ····· Light blue
- Lg ····· Light green
- O ····· Orange
- P ····· Pink
- R ····· Red
- W ····· White
- Y ····· Yellow
- B/Bl ····· Black with Blue tracer
- B/Br ····· Black with Brown tracer
- B/G ····· Black with Green tracer
- B/Lg ····· Black with Light green tracer
- B/R ····· Black with Red tracer
- B/W ····· Black with White tracer
- B/Y ····· Black with Yellow tracer
- Bl/B ····· Blue with Black tracer
- G/Bl ····· Green with Blue tracer
- G/Y ····· Green with Yellow tracer
- O/B ····· Orange with Black tracer
- O/Bl ····· Orange with Blue tracer
- O/G ····· Orange with Green tracer
- O/R ····· Orange with Red tracer
- O/W ····· Orange with White tracer
- O/Y ····· Orange with Yellow tracer
- R/B ····· Red with Black tracer
- R/W ····· Red with White tracer
- R/Y ····· Red with Yellow tracer
- W/B ····· White with Black tracer
- W/Bl ····· White with Blue tracer
- Y/B ····· Yellow with Black tracer
- Y/Bl ····· Yellow with Blue tracer
- Y/G ····· Yellow with Green tracer
- Y/W ····· Yellow with White tracer

SV650 (FOR E-03, 33 MODELS)

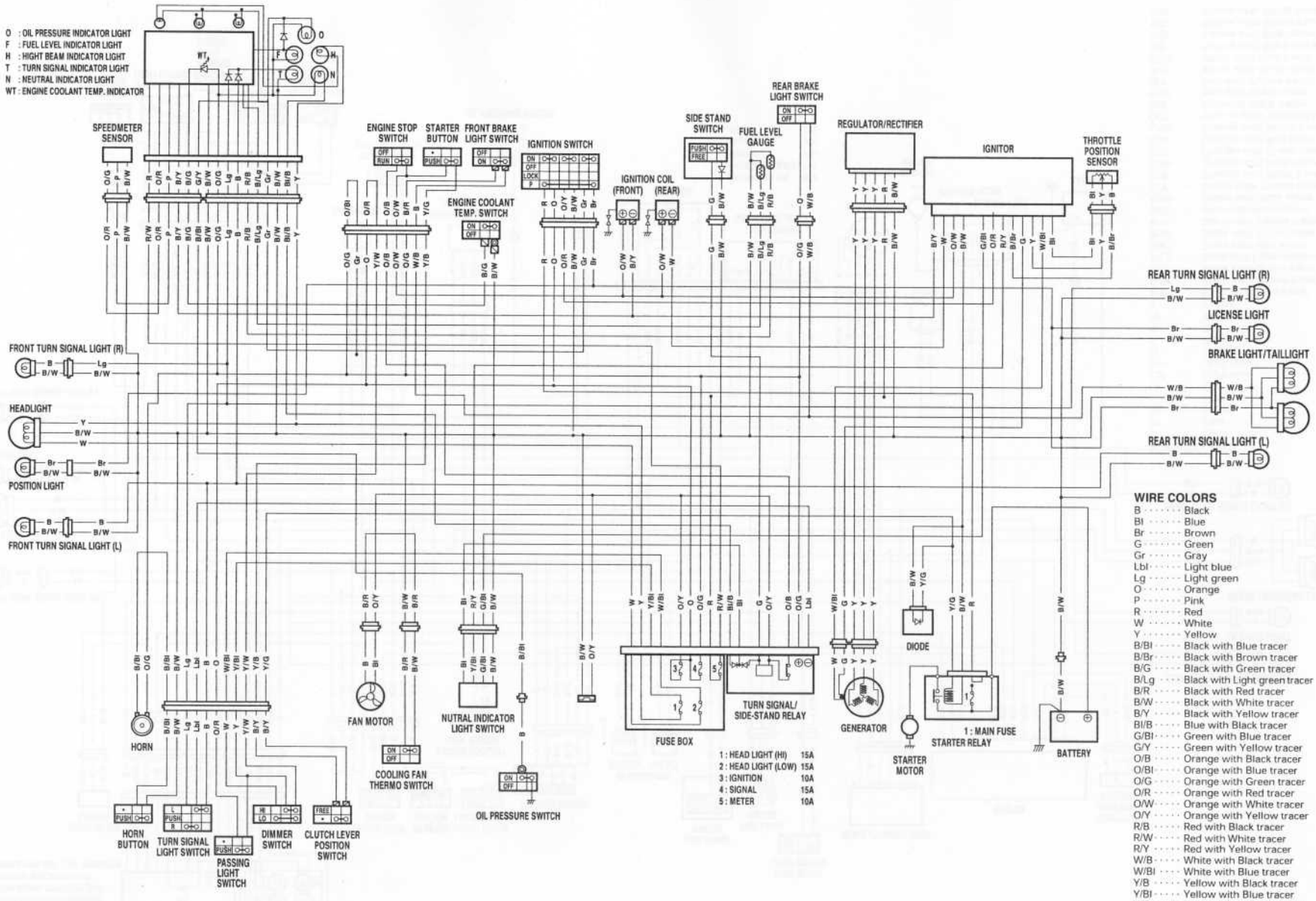

WIRE COLORS

- B ····· Black
- Bl ····· Blue
- Br ····· Brown
- G ····· Green
- Gr ····· Gray
- Lbl ····· Light blue
- Lg ····· Light green
- O ····· Orange
- P ····· Pink
- R ····· Red
- W ····· White
- Y ····· Yellow
- B/Bl ····· Black with Blue tracer
- B/Br ····· Black with Brown tracer
- B/G ····· Black with Green tracer
- B/Lg ····· Black with Light green tracer
- B/R ····· Black with Red tracer
- B/W ····· Black with White tracer
- B/Y ····· Black with Yellow tracer
- Bl/B ····· Blue with Black tracer
- G/Bl ····· Green with Blue tracer
- G/Y ····· Green with Yellow tracer
- O/B ····· Orange with Black tracer
- O/Bl ····· Orange with Blue tracer
- O/G ····· Orange with Green tracer
- O/R ····· Orange with Red tracer
- O/W ····· Orange with White tracer
- O/Y ····· Orange with Yellow tracer
- R/B ····· Red with Black tracer
- R/W ····· Red with White tracer
- R/Y ····· Red with Yellow tracer
- W/B ····· White with Black tracer
- W/Bl ····· White with Blue tracer
- Y/B ····· Yellow with Black tracer
- Y/Bl ····· Yellow with Blue tracer
- Y/G ····· Yellow with Green tracer
- Y/W ····· Yellow with White tracer

SV650S (FOR E-04, 17, 18, 22, 25 AND 34 MODELS)

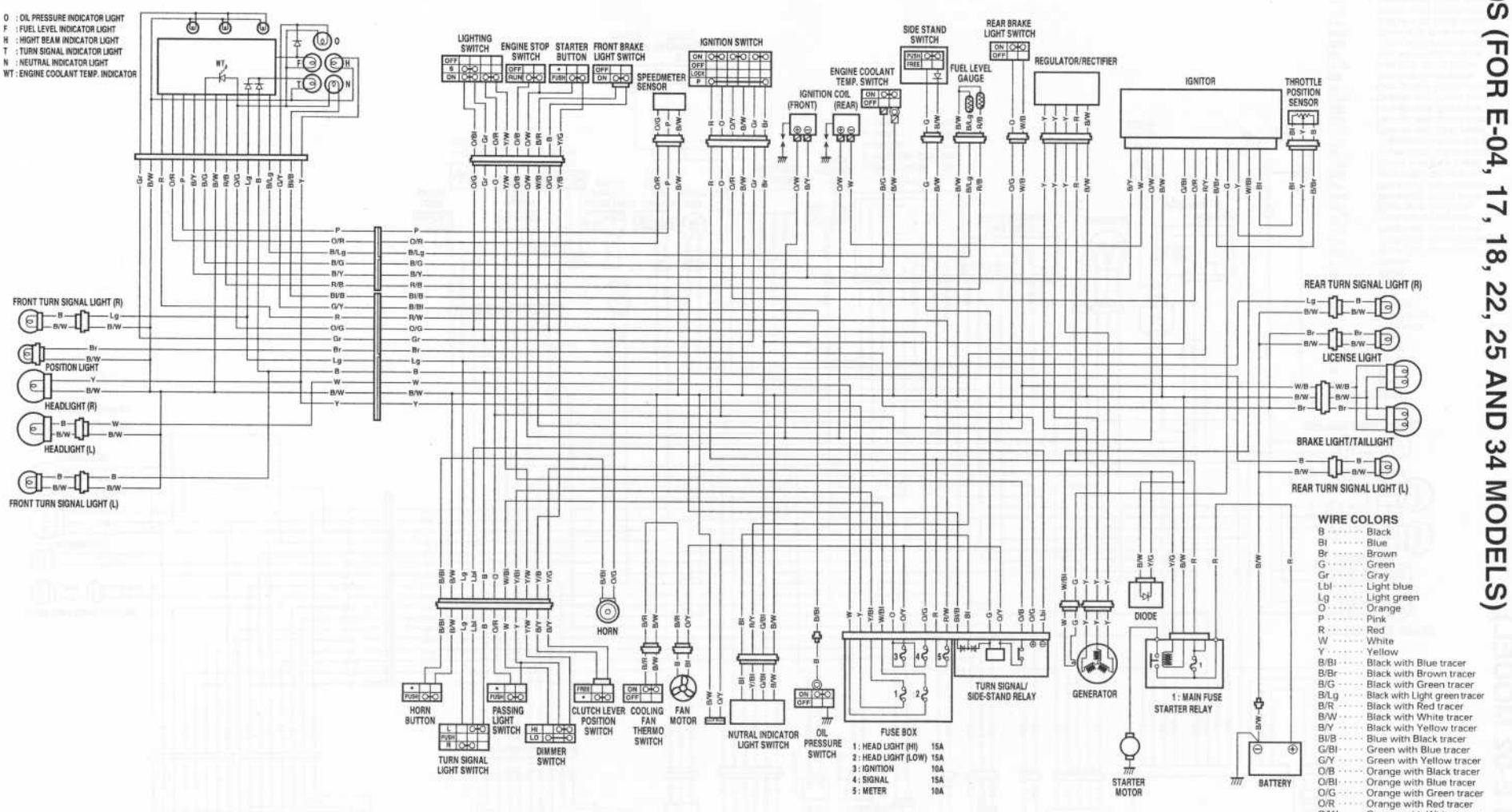

SV650S (FOR E-02 MODEL)

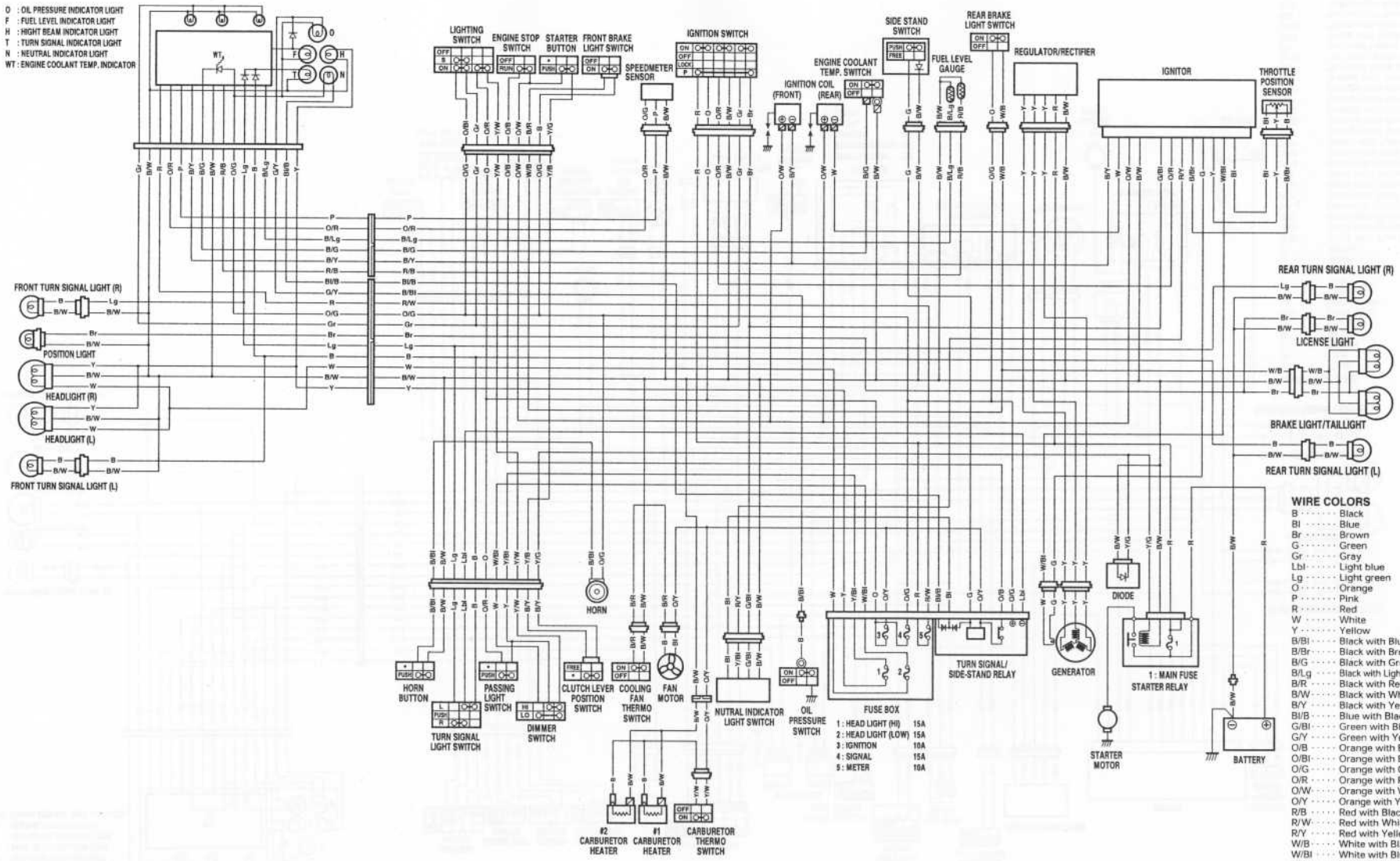

WIRE COLORS

- B ····· Black
- Bl ····· Blue
- Br ····· Brown
- G ····· Green
- Gr ····· Gray
- Lbl ····· Light blue
- Lg ····· Light green
- O ····· Orange
- P ····· Pink
- R ····· Red
- W ····· White
- Y ····· Yellow
- B/Bl ····· Black with Blue tracer
- B/Br ····· Black with Brown tracer
- B/G ····· Black with Green tracer
- B/Lg ····· Black with Light green tracer
- B/R ····· Black with Red tracer
- B/W ····· Black with White tracer
- B/Y ····· Black with Yellow tracer
- Bl/B ····· Blue with Black tracer
- G/Bl ····· Green with Blue tracer
- G/Y ····· Green with Yellow tracer
- O/B ····· Orange with Black tracer
- O/Bl ····· Orange with Blue tracer
- O/G ····· Orange with Green tracer
- O/R ····· Orange with Red tracer
- O/W ····· Orange with White tracer
- O/Y ····· Orange with Yellow tracer
- R/B ····· Red with Black tracer
- R/W ····· Red with White tracer
- R/Y ····· Red with Yellow tracer
- W/B ····· White with Black tracer
- W/Bl ····· White with Blue tracer
- Y/B ····· Yellow with Black tracer
- Y/Bl ····· Yellow with Blue tracer
- Y/G ····· Yellow with Green tracer
- Y/W ····· Yellow with White tracer

SV650S (FOR E-24 MODEL)

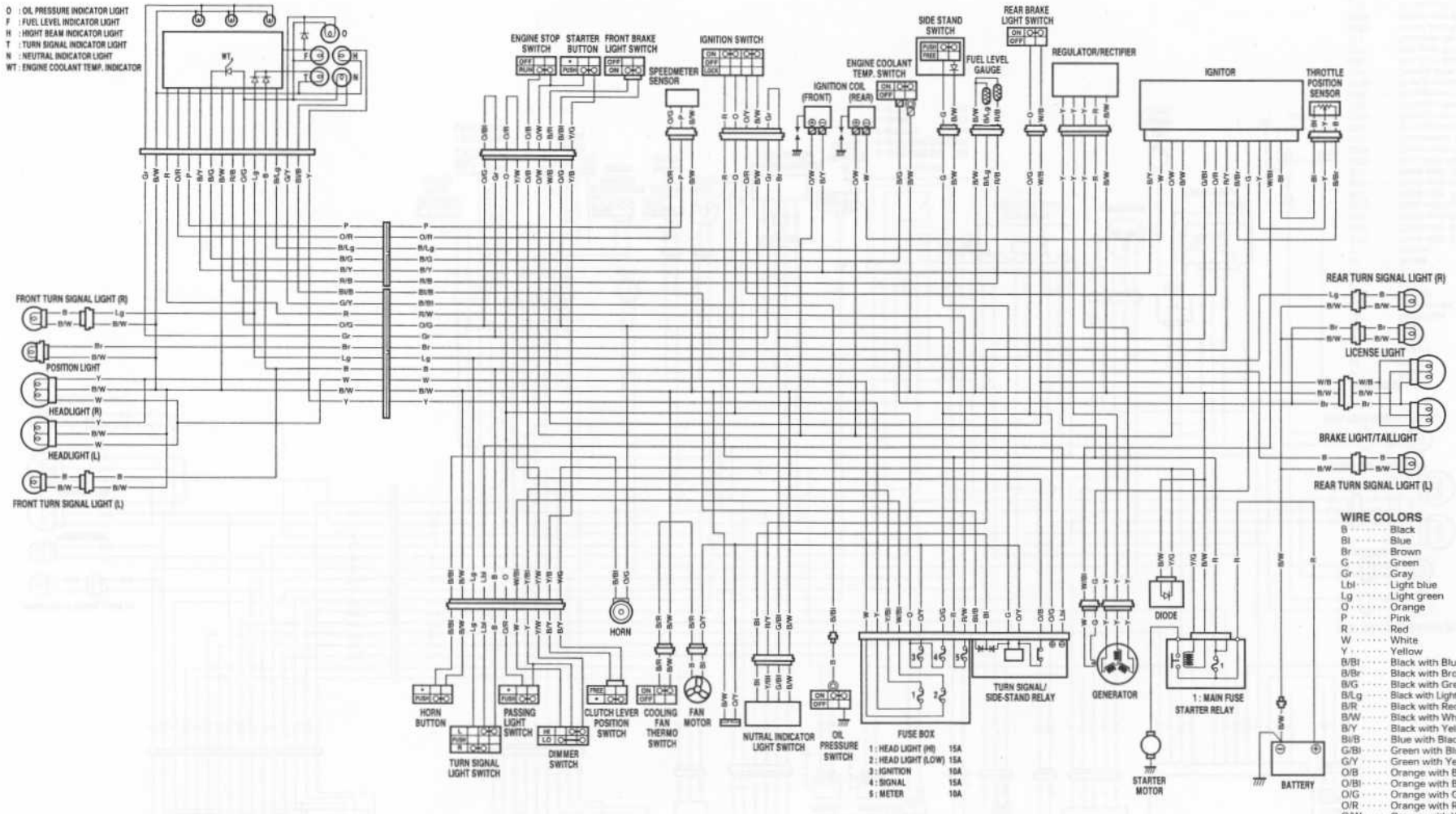

SV650S (FOR E-03, 28, 33 MODELS)

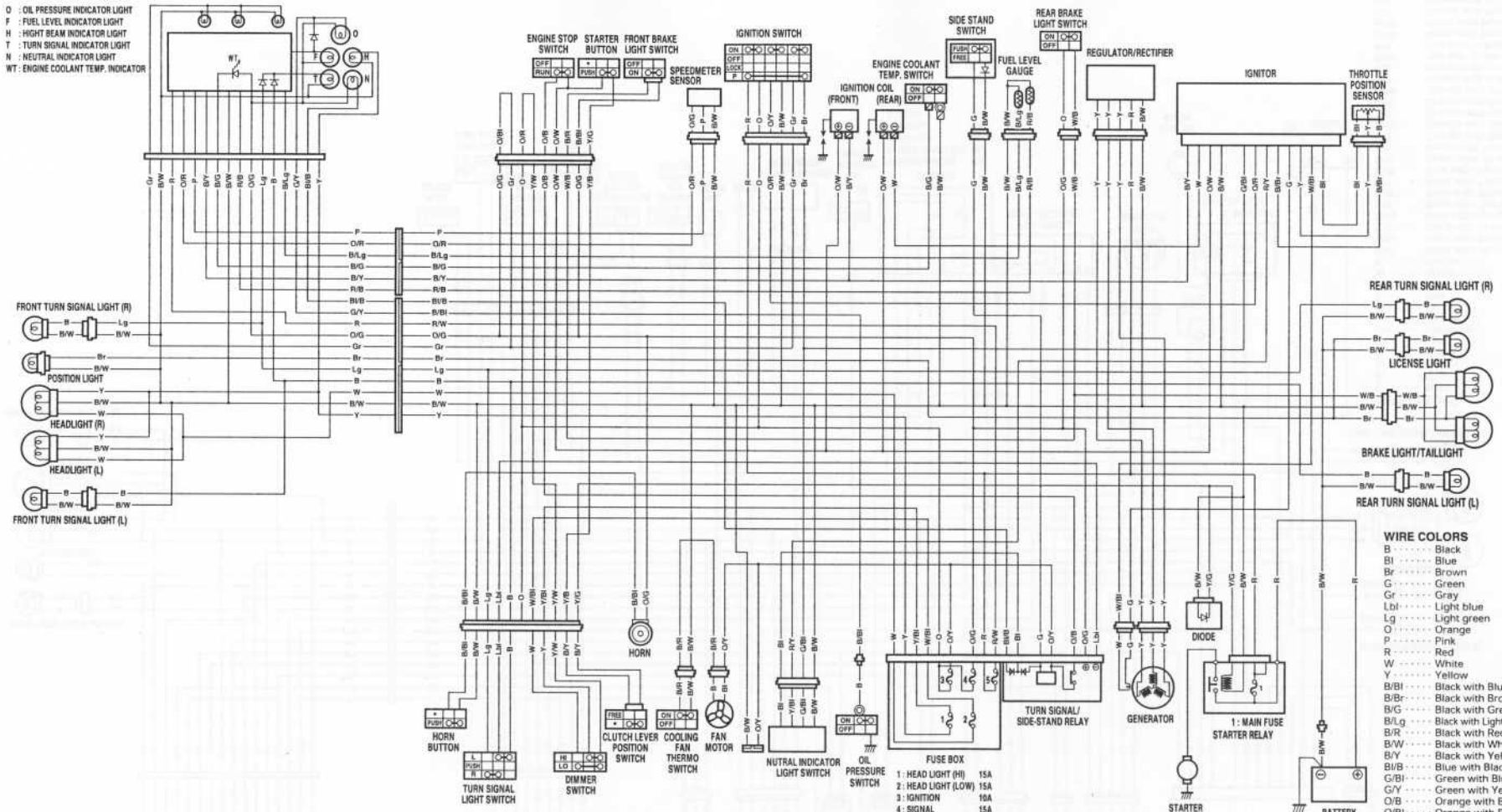

WIRE COLORS

- B ····· Black
- Bl ····· Blue
- Br ····· Brown
- G ····· Green
- Gr ····· Gray
- Lbl ····· Light blue
- Lg ····· Light green
- O ····· Orange
- P ····· Pink
- R ····· Red
- W ····· White
- Y ····· Yellow
- B/Bl ····· Black with Blue tracer
- B/Br ····· Black with Brown tracer
- B/G ····· Black with Green tracer
- B/Lg ····· Black with Light green tracer
- B/R ····· Black with Red tracer
- B/W ····· Black with White tracer
- B/Y ····· Black with Yellow tracer
- Bl/B ····· Blue with Black tracer
- G/Bl ····· Green with Blue tracer
- G/Y ····· Green with Yellow tracer
- O/B ····· Orange with Black tracer
- O/Bl ····· Orange with Blue tracer
- O/G ····· Orange with Green tracer
- O/R ····· Orange with Red tracer
- O/W ····· Orange with White tracer
- O/Y ····· Orange with Yellow tracer
- R/B ····· Red with Black tracer
- R/W ····· Red with White tracer
- R/Y ····· Red with Yellow tracer
- W/B ····· White with Black tracer
- W/Bl ····· White with Blue tracer
- Y/B ····· Yellow with Black tracer
- Y/Bl ····· Yellow with Blue tracer
- Y/G ····· Yellow with Green tracer
- Y/W ····· Yellow with White tracer

WIRE HARNESS ROUTING
SV650

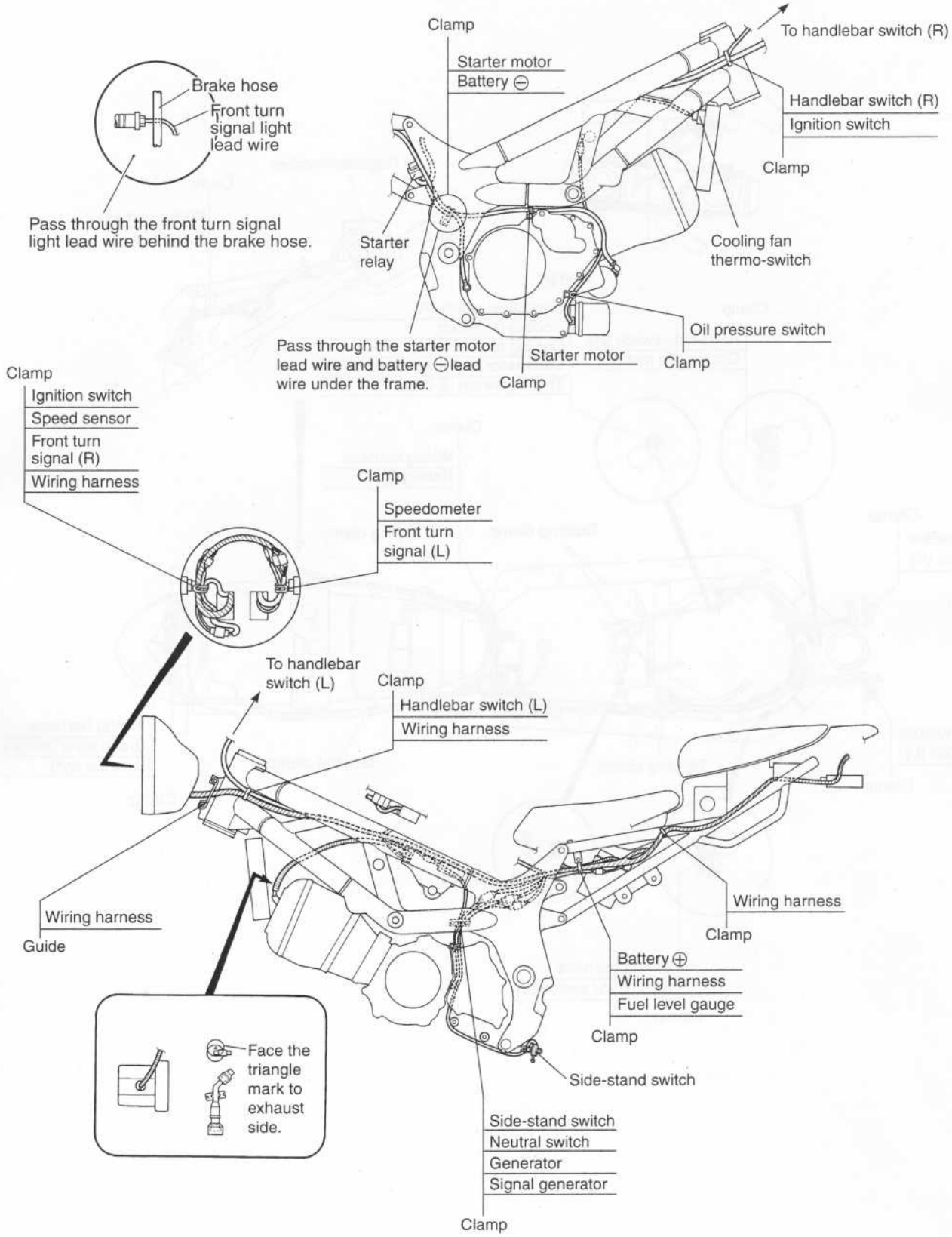

SV650

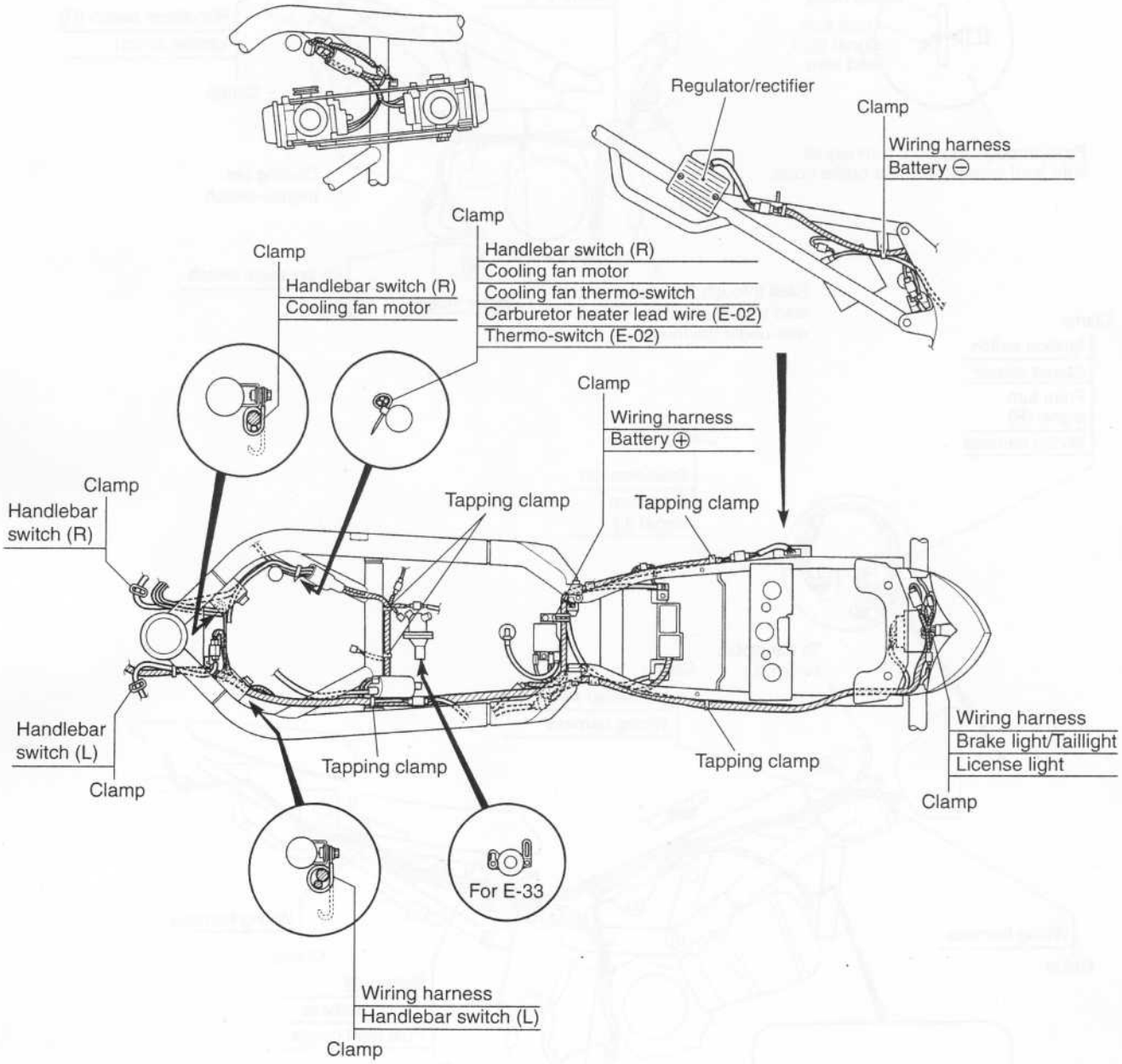
Regulator/rectifier
Clamp
Wiring harness
Battery ⊖
Clamp
Handlebar switch (R)
Cooling fan motor
Cooling fan thermo-switch
Carburetor heater lead wire (E-02)
Thermo-switch (E-02)
Clamp
Handlebar switch (R)
Cooling fan motor
Clamp
Wiring harness
Battery ⊕
Clamp
Handlebar switch (R)
Tapping clamp
Tapping clamp
Handlebar switch (L)
Clamp
Tapping clamp
Tapping clamp
Wiring harness
Brake light/Taillight
License light
Clamp
For E-33
Wiring harness
Handlebar switch (L)
Clamp

SV650S

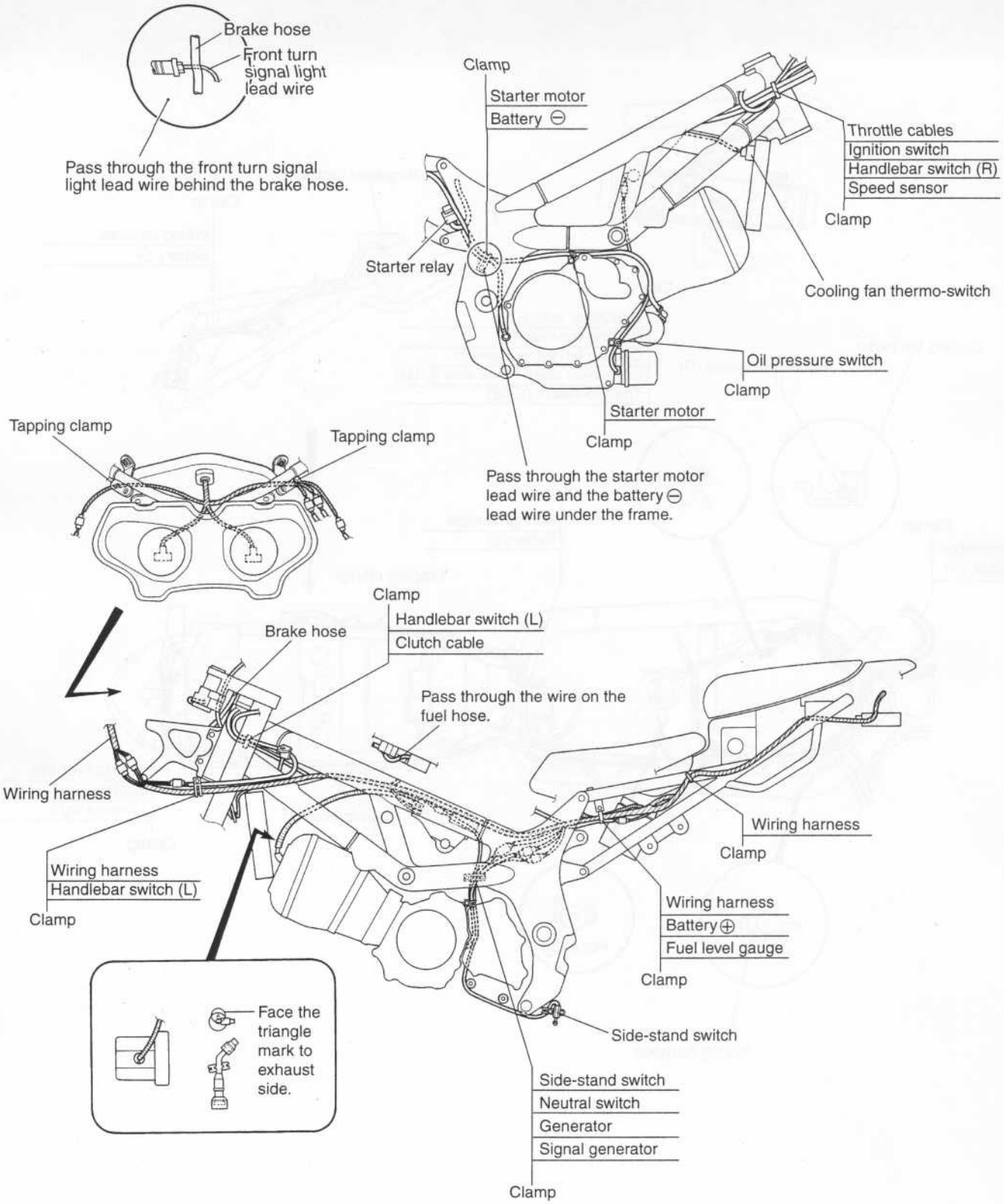
Brake hose
Front turn signal light lead wire
Pass through the front turn signal light lead wire behind the brake hose.
Clamp
Starter motor
Battery ⊖
Throttle cables
Ignition switch
Handlebar switch (R)
Speed sensor
Clamp
Starter relay
Cooling fan thermo-switch
Oil pressure switch
Clamp
Starter motor
Clamp
Pass through the starter motor lead wire and the battery ⊖ lead wire under the frame.
Tapping clamp
Tapping clamp
Clamp
Handlebar switch (L)
Clutch cable
Brake hose
Pass through the wire on the fuel hose.
Wiring harness
Wiring harness
Clamp
Wiring harness
Handlebar switch (L)
Clamp
Wiring harness
Battery ⊕
Fuel level gauge
Clamp
Face the triangle mark to exhaust side.
Side-stand switch
Side-stand switch
Neutral switch
Generator
Signal generator
Clamp

SV650S

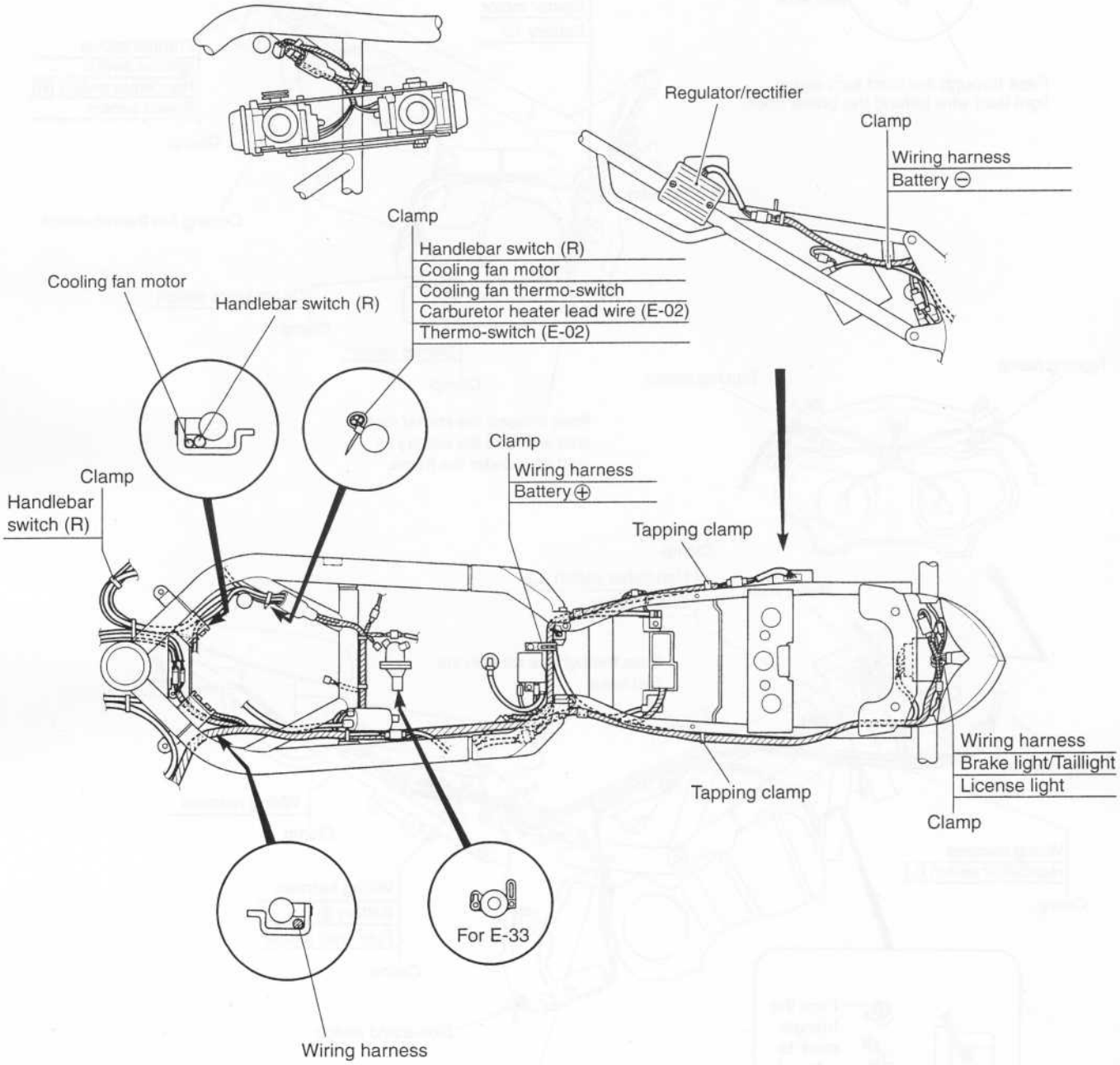
Regulator/rectifier
Clamp
Wiring harness
Battery ⊖
Clamp
Handlebar switch (R)
Cooling fan motor
Cooling fan thermo-switch
Carburetor heater lead wire (E-02)
Thermo-switch (E-02)
Cooling fan motor
Handlebar switch (R)
Clamp
Handlebar switch (R)
Clamp
Wiring harness
Battery ⊕
Tapping clamp
Wiring harness
Brake light/Taillight
License light
Tapping clamp
Clamp
For E-33
Wiring harness

Prepared by

SUZUKI MOTOR CORPORATION

Overseas Service Department
4th Ed. September, 2001
1st Ed. December, 1998
Part No. 99500-36093-03E
Printed in Japan

TIGHTENING TORQUE

ENGINE

ITEM		N-m	kgf-m	lb-ft
Cylinder head cover bolt		14	1.40	10.0
Spark plug		11	1.10	8.0
Camshaft journal holder bolt		10	1.00	7.0
Cam chain tension adjuster bolt		8	0.80	6.0
Cam chain tension adjuster mounting bolt		10	1.00	7.0
Cam chain guide bolt		10	1.00	7.0
Cam chain tensioner mounting bolt		10	1.00	7.0
Cylinder head bolt [M10]	(Initial)	25	2.50	18.0
	(Final)	42	4.20	30.5
Cylinder head bolt [M6]		10	1.00	7.0
Cylinder head side bolt		14	1.40	10.0
Cylinder nut	[M:6]	10	1.00	7.0
Water drain bolt		13	1.30	9.5
Impeller securing bolt		13	1.30	9.5
Clutch sleeve hub nut		50	5.00	36.0
Clutch spring set bolt		5.5	0.55	4.0
Oil plate bolt		10	1.00	7.0
Oil pressure regulator		27	2.70	19.5
Oil strainer plate bolt		10	1.00	7.0
Primary drive gear bolt		70	7.00	50.5
Generator cover plug		11	1.10	8.0
Valve timing inspection plug		23	2.30	16.5
Generator rotor bolt		120	12.00	87.0
Starter clutch bolt		25	2.50	18.0
Generator stator set bolt		10	1.00	7.0
Signal generator set bolt		5.5	0.55	4.0
Gearshift cam stopper bolt		10	1.00	7.0
Gearshift cam stopper plate bolt		10	1.00	7.0
Gearshift arm stopper bolt		23	2.30	16.5
Oil pressure switch		14	1.40	10.0
Crankcase bolt	[M:6]	11	1.10	8.0
	[M:8]	26	2.60	19.0
Generator cover bolt	[M:6]	10	1.00	7.0
Clutch cover bolt	[M:6]	10	1.00	7.0
Water pump case screw		4.5	0.45	3.3
Oil gallery plug	[M:16]	35	3.50	25.5
	[M:8]	18	1.80	13.0
	[M6]	5.5	0.55	4.0
Oil drain plug		21	2.10	15.0
Piston cooling oil jet bolt		10	1.00	7.0
Oil pump mounting bolt		8	0.80	6.0
Conrod bearing cap bolt	(Initial)	35	3.50	25.5
	(Final)	67	6.70	48.5
Exhaust pipe bolt		23	2.30	16.5
Crankcase bearing retainer screw		8	0.80	6.0
Muffler mounting nut		23	2.30	16.5
Muffler joint nut		23	2.30	16.5
Oil pipe stopper screw		8	0.80	6.0
Engine sprocket nut		145	14.50	105.0
Engine mounting pinch bolt		23	2.30	16.5
Engine mounting bolt/nut	[M:12]	93	9.30	67.5
	[M:10]	55	5.50	40.0

ITEM		N-m	kgf-m	lb-ft
Engine mounting thrust adjuster	[Center]	10	1.00	7.0
	[Rear Lower]	10	1.00	7.0
Engine mounting thrust adjuster lock nut	[Center]	45	4.50	32.5
	[Rear Lower]	45	4.50	32.5
Cooling fan thermo-switch		13	1.30	9.5
Engine coolant temperature switch		10	1.00	7.0

CHASIS

ITEM	N-m	kgf-m	lb-ft
Steering stem head nut	65	6.50	47.0
Front frok upper clamp bolt	23	2.30	16.5
Front fork lower clamp bolt	23	2.30	16.5
Front fork cap bolt	23	2.30	16.5
Front fork damper rod bolt	30	3.00	21.5
Front axle	65	6.50	47.0
Front axle pinch bolt	23	2.30	16.5
Handlebar clamp bolt	23	2.30	16.5
Handlebar holder nut	45	4.50	32.5
Front brake master cylinder mounting bolt	10	1.00	7.0
Front brake caliper mounting bolt	39	3.90	28.0
Brake hose union bolt	23	2.30	16.5
Clutch holder mounting bolt	10	1.00	7.0
Air bleeder valve	7.5	0.75	5.5
Brake disc bolt (Front and Rear)	23	2.30	16.5
Rear brake caliper mounting bolt	26	2.60	19.0
Rear brake caliper housing bolt	30	3.00	21.5
Rear brake master cylinder mounting bolt	10	1.00	7.0
Rear brake master cylinder rod lock nut	18	1.80	13.0
Front footrest bracket mounting bolt	23	2.30	16.5
Front footrest bolt	39	3.90	28.0
Swingarm pivot shaft	15	1.50	11.0
Swingarm pivot shaft nut	100	10.00	72.5
Swingarm pivot shaft lock nut	90	9.00	65.0
Torque link nut (Front and Rear)	35	3.50	25.5
Rear shock absorber mounting bolt/nut (Upper & Lower)	50	5.00	36.0
Rear cushion lever/rod mounting nut	78	7.80	56.5
Rear axle nut	65	6.50	47.0
Rear sprocket nut	60	6.00	43.5

FIG.12

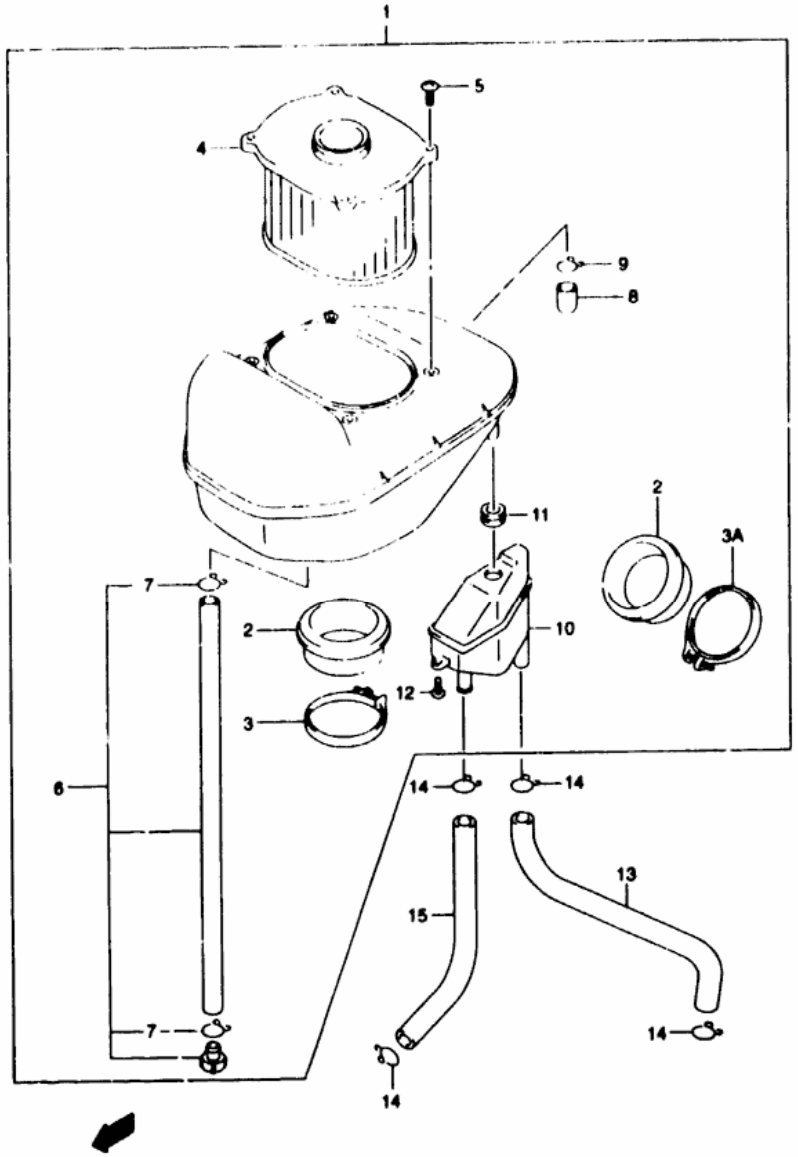

FIG 12 (C- 8) AIR CLEANER

REF.NO.	PART NO.	DESCRIPTION	Q'TY	REMARKS
1-1	13700-20F00	CLEANER ASSY, AIR	1	
1-2	13700-20F10	CLEANER ASSY, AIR	1	E33
2	13881-20F00	TUBE, OUTLET	2	
3	13170-20F10	CLAMP, OUTLET TUBE FRONT	1	
3A	13170-20F00	CLAMP, OUTLET TUBE REAR	1	
4	13780-20F00	FILTER, AIR CLEANER	1	
5	02142-05203	SCREW	4	
6-1	13870-19F00	TUBE DRAIN	1	
6-2	13870-20F10	TUBE, DRAIN	1	E33
7	09401-14301	CLIP	2	
8	13859-41B10	PLUG	1	EXCEPT E33
9	09401-14301	CLIP	1	EXCEPT E33
10	13840-20F00	TANK OIL RETURN	1	
11	09308-13001	GROMMET	1	
12	03142-05163	SCREW	2	
13	13851-20F00	TUBE, BREATHER CRANKCASE	1	
14	09401-15101	CLIP	4	
15	09355-11165-600	TUBE, BREATHER CYLINDER (11X16X600)	1	L 600 →220

AIR CLEANER..... C-08
BATTERY..... E-04
CAM CHAIN..... C-04
CAM SHAFT / VALVE.. C-03
CRANKCASE COVER.... B-07
CRANKCASE..... B-05
CRANKSHAFT..... B-08
CYLINDER..... B-04
FRONT BRAKE HOSE... I-07
FRONT CALIPER..... I-06
FRONT CYLINDER HEAD B-02
FRONT FENDER..... G-11
GEAR SHIFTING..... D-12
HANDLE BAR..... H-02
HANDLE LEVER..... F-04
HANDLE SWITCH..... F-11
OPTIONAL..... J-04
RADIATOR HOSE..... J-07
RADIATOR..... J-06
REAR CALIPER..... J-05
J-04
H-11
H-10
F-02
TRANSMISSION..... D-10
TURNSIGNAL LAMP.... F-06
WARNING LABEL..... H-09
WATER PUMP..... D-04

FIG.24

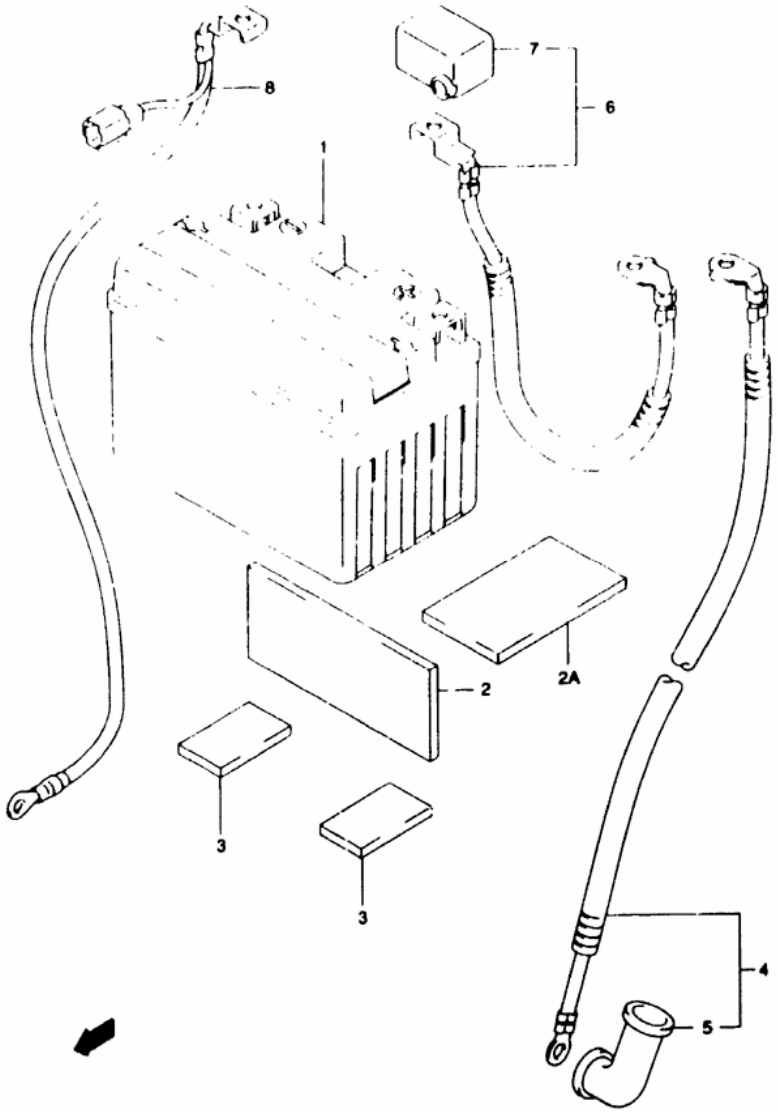

FIG 24 (E-4) BATTERY

REF.NO.	PART NO.	DESCRIPTION	Q'TY	REMARKS
1	33610-02F00	BATTERY ASSY (YT12A-BS 12V 10AH)	1	
2	33651-37000	PROTECTOR (170X95X3.0)	3	CUT AS REQUIRED PROFILE (115X50)
2A	33652-19F00	PROTECTOR (40X85X5)	1	
3	33652-28000	PROTECTOR BATTERY (20X45X6)	2	
4	33810-19F00	WIRE STARTER MOTOR LEAD	1	
5	31861-48B10	CAP STARTER MOTOR LEAD	1	
6	33820-19F00	WIRE BATTERY (+) LEAD	1	
7	33624-16E00	CAP BATTERY (+)	1	
8	33660-19F00	WIRE BATTERY (-) LEAD	1	

AIR CLEANER..... C-08 CRANKCASE COVER.... B-07 FRONT BRAKE HOSE... I-07 GEAR SHIFTING..... D-12 OPTIONAL..... J-07 REAR WHEEL..... J-04 TRANSMISSION..... D-10

FIG.9

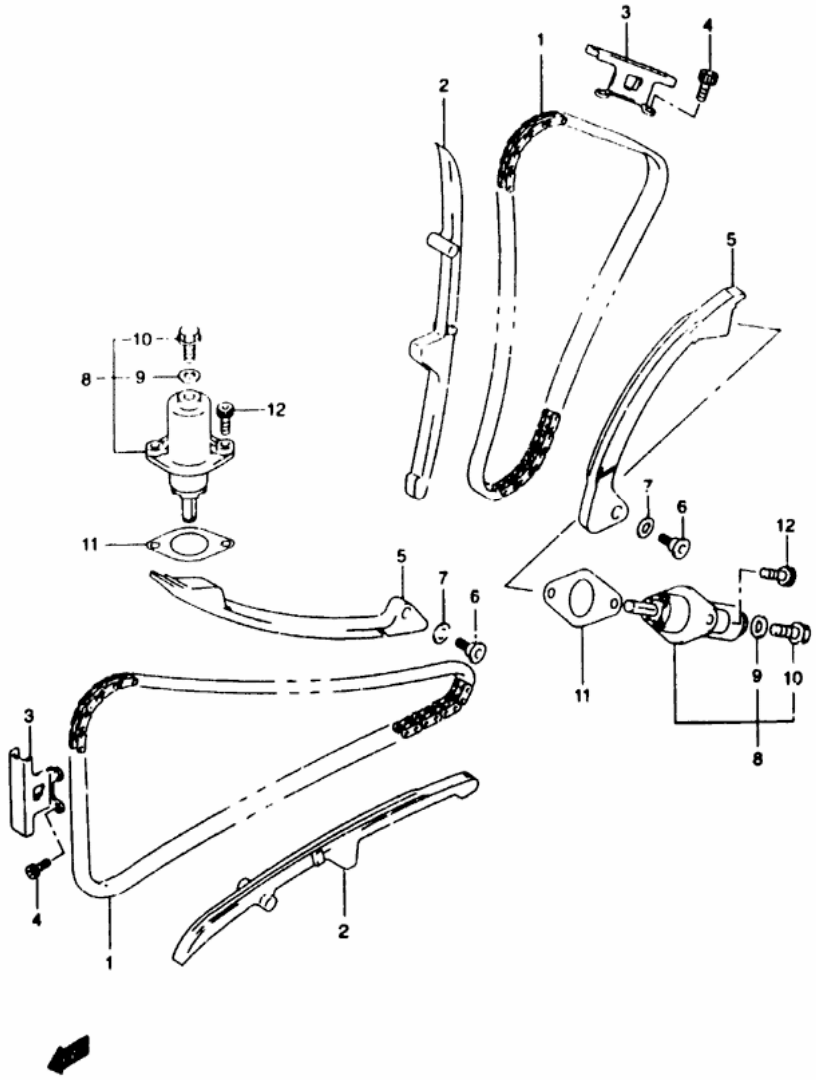

FIG.9 (C-4) CAM CHAIN

REF.NO.	PART NO.	DESCRIPTION	Q'TY	REMARKS
1	12760-19F00	CHAIN, CAM SHAFT DRIVE	2	
2	12771-19F00	GUIDE, CAM CHAIN NO 1	2	
3	12782-19F00	GUIDE, CAM CHAIN NO 2	2	
4	07130-06123	BOLT	6	
5	12811-19F00	TENSIONER, CAM CHAIN	2	
6	12812-35C00	BOLT, CAM CHAIN TENSIONER	2	
7	08211-06181	WASHER	2	
8	12830-19F10	ADJUSTER ASSY. TENSIONER	2	
9	12837-33E00	GASKET, TENSIONER ADJUSTER	2	
10	12834-33E00	PLUG, TENSIONER ADJUSTER	2	
11	12837-24A10	GASKET TENSIONER ADJUSTER	2	
12	07130-06253	BOLT	4	

FIG.8

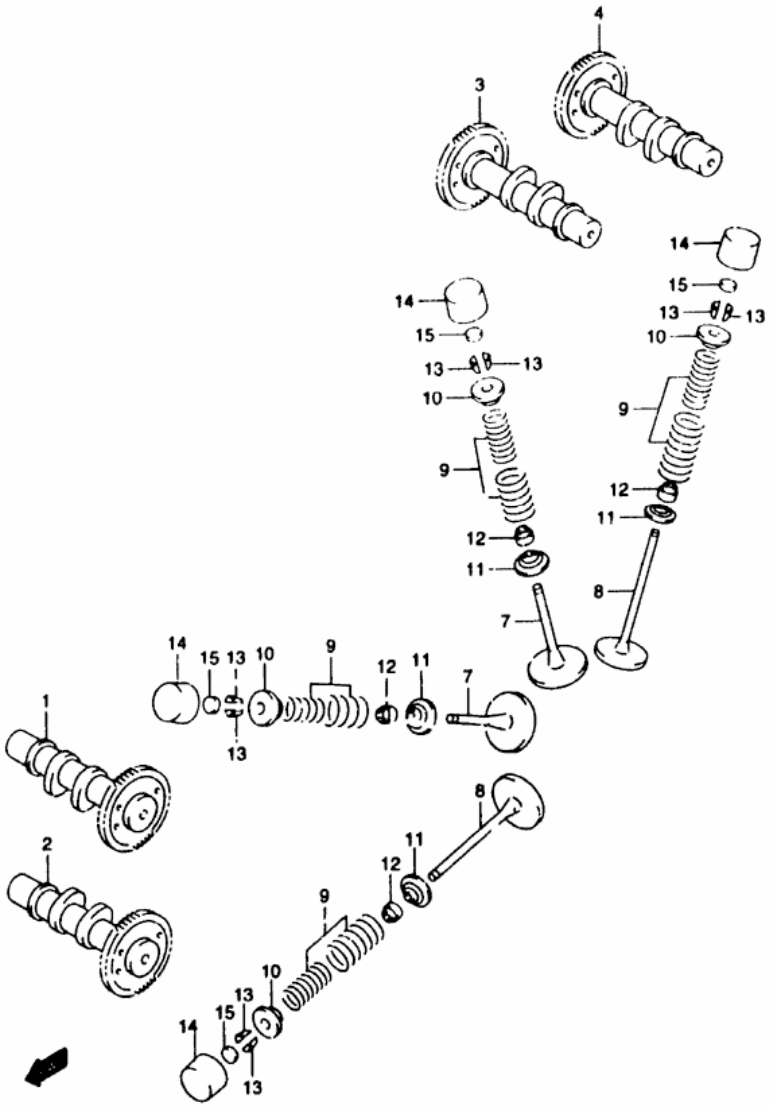

FIG.8 (C- 3) CAM SHAFT / VALVE

REF.NO.	PART NO.	DESCRIPTION	Q'TY	REMARKS
1	12710-20F00	CAM SHAFT, INTAKE FRONT	1	
2	12720-20F00	CAM SHAFT, EXHAUST FRONT	1	
3	12730-20F00	CAM SHAFT, INTAKE REAR	1	
4	12740-20F00	CAM SHAFT, EXHAUST REAR	1	
5	12800-05820	SHIM SET, TAPPET	1	OPT NOT SHOWN
6	99000-69491	CASE, TAPPET SHIM	1	
7	12911-46E00	VALVE, INTAKE	4	
8	12912-20F00	VALVE, EXHAUST	4	
9	12920-33E10	SPRING SET, VALVE	8	
10	12931-33E10	RETAINER VALVE SPRING	8	
11	12933-39E00	SEAT, VALVE SPRING	8	
12	09289-04002	OIL SEAL (4.5X10X8)	8	
13	12932-17E50	COTTER VALVE	16	
14	12891-17E00	TAPPET	8	
15-1	12892-05C00-120	SHIM, TAPPET (T 1.20)	8	
15-2	12892-05C00-125	SHIM, TAPPET (T 1.25)	8	
15-3	12892-05C00-130	SHIM, TAPPET (T 1.30)	8	
15-4	12892-05C00-135	SHIM, TAPPET (T 1.35)	8	
15-5	12892-05C00-140	SHIM, TAPPET (T 1.40)	8	
15-6	12892-05C00-145	SHIM, TAPPET (T 1.45)	8	
15-7	12892-05C00-150	SHIM, TAPPET (T 1.50)	8	
15-8	12892-05C00-155	SHIM, TAPPET (T 1.55)	8	
15-9	12892-05C00-160	SHIM, TAPPET (T 1.60)	8	
15-10	12892-05C00-165	SHIM, TAPPET (T 1.65)	8	
15-11	12892-05C00-170	SHIM, TAPPET (T 1.70)	8	
15-12	12892-05C00-175	SHIM, TAPPET (T 1.75)	8	
15-13	12892-05C00-180	SHIM, TAPPET (T 1.80)	8	
15-14	12892-05C00-185	SHIM, TAPPET (T 1.85)	8	
15-15	12892-05C00-190	SHIM, TAPPET (T 1.90)	8	
15-16	12892-05C00-195	SHIM, TAPPET (T 1.95)	8	
15-17	12892-05C00-200	SHIM, TAPPET (T 2.00)	8	
15-18	12892-05C00-205	SHIM, TAPPET (T 2.05)	8	
15-19	12892-05C00-210	SHIM, TAPPET (T 2.10)	8	
15-20	12892-05C00-215	SHIM, TAPPET (T 2.15)	8	
15-21	12892-05C00-220	SHIM, TAPPET (T 2.20)	8	

FIG.10

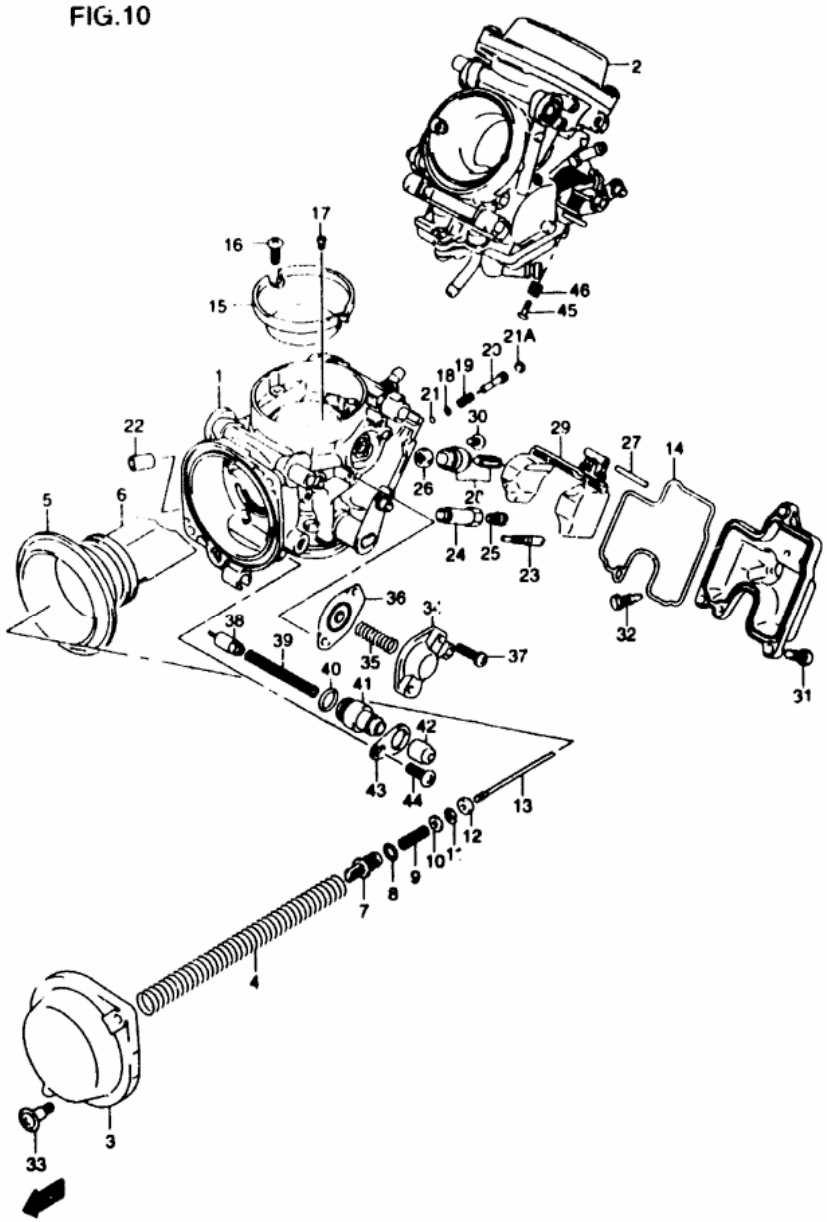

FIG 10 (C- 5) CARBURETOR

REF.NO.	PART NO.	DESCRIPTION	Q'TY	REMARKS
1-1	13201-20F20	CARBURETOR ASSY, FRONT	1	
1-2	13201-20F40	CARBURETOR ASSY, FRONT	1	E33
2-1	13202-20F20	CARBURETOR ASSY, REAR	1	
2-2	13202-20F40	CARBURETOR ASSY, REAR	1	E33
3	13502-07F00	COVER ASSY, DIAPHRAGM	2	
4	13481-19F00	SPRING	2	
5	13507-33E00	DIAPHRAGM	2	
6	13501-33E00	VALVE PISTON	2	
7	13418-33E00	HOLDER	2	
8	09280-05004	O RING (D 1 9 ID 4 8)	2	
9	13481-33E00	SPRING	2	
10	13382-44030	WASHER	2	
11	13394-17E60	E RING	2	
12	13387-33E00	RING	2	
13-1	13383-20F30	NEEDLE JET (6E42-54-1)	2	
13-2	13383-20F40	NEEDLE JET (6E43-54-1)	2	E33
14	13258-33E00	O RING	2	
15	13667-20F00	FUNNEL	2	
16	02112-04123	SCREW	4	
17-1	09493-32007	JET, PILOT AIR (160)	2	
17-2	09492-30013	JET, PILOT AIR (150)	2	E33
18	13291-29900	WASHER	2	
19	13268-48700	SPRING	2	
20	13279-19F10	ADJUSTER (2 3/4)	2	
21	13295-29900	O RING	2	
21A	13281-05A00	PLUG	2	
22	13508-17C00	CAP	1	FRONT
23	09492-15017	JET, PILOT (15)	2	
24	13385-33E00	HOLDER, JET	2	
25	09491-27014	JET, MAIN (137 5)	2	

FIG.10

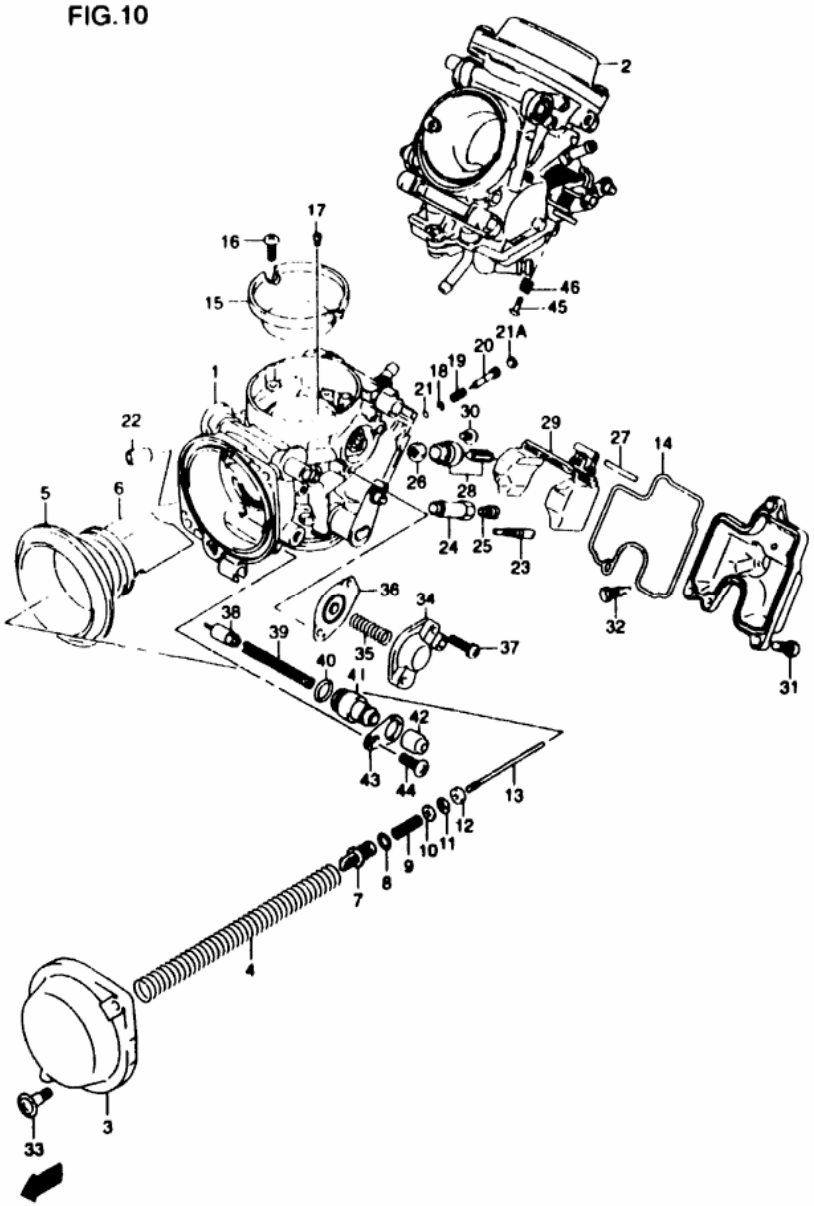

FIG 10 (C- 6) CARBURETOR

REF.NO.	PART NO.	DESCRIPTION	Q'TY	REMARKS
26	13376-19F00	FILTER	2	
27	13254-92910	FLOAT PIN	2	
28	13370-20F00	VALVE ASSY. NEEDLE	2	
29	13250-33E00	FLOAT ASSY	2	
30	13602-05A10	SCREW	2	
31	02112-05127	SCREW	6	
32	13247-13A00	SCREW DRAIN	2	
33	13247-33E00	SCREW	4	
34	13502-10F00	COVER ASSY	2	
35	13417-19F00	SPRING	2	
36	13480-10F00	DIAPHRAGM ASSY	2	
37	13601-04148	SCREW	4	
38	13411-01400	PLUNGER STARTER	2	
39	13417-07F00	SPRING	2	
40	13278-18E20	O RING	2	
41	13418-19F00	HOLDER GUIDE	2	
42	13681-04010	CAP CARBURETOR	2	
43	13421-19F00	PLATE	2	
44	13601-05148	SCREW	2	
45	13267-44B00	SCREW	1	REAR
46	13271-44B00	SPRING	1	REAR

FIG.11

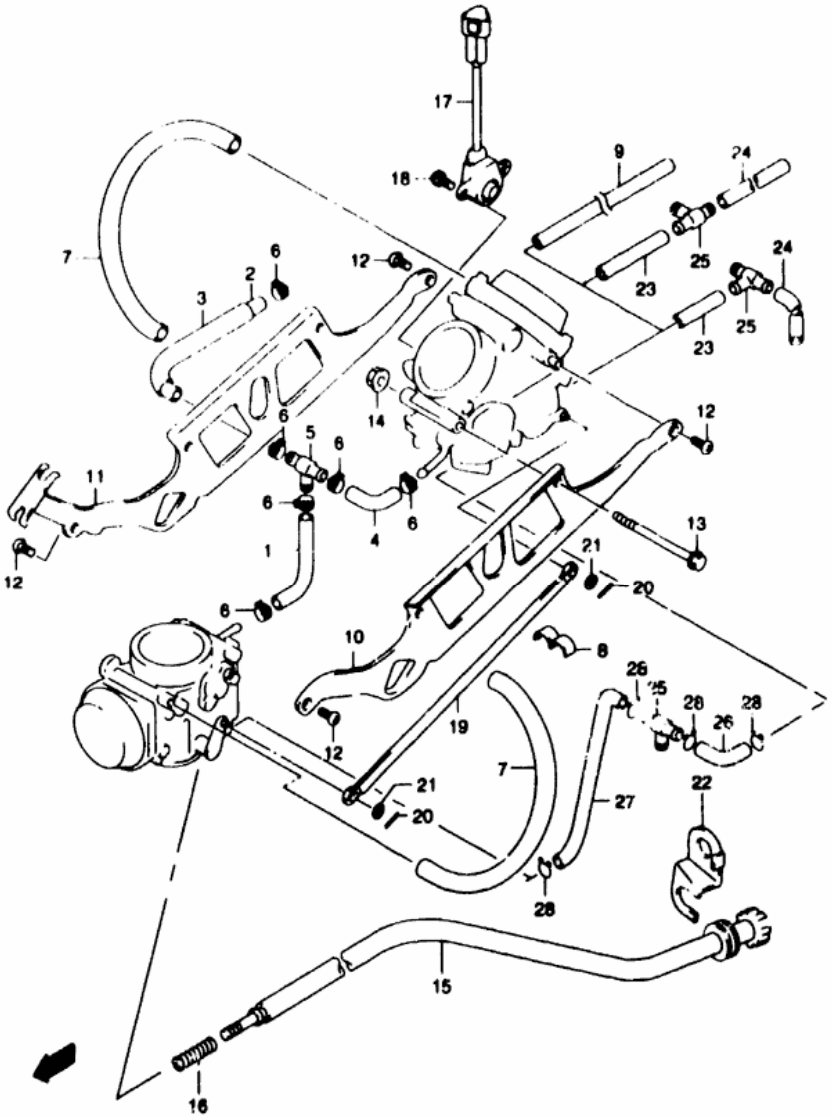

FIG 11 (C- 7) CARBURETOR FITTINGS

REF.NO.	PART NO.	DESCRIPTION	Q'TY	REMARKS
1	13684-48B10	HOSE	1	
2	13684-19F00	HOSE (5 3X10 5X125)	1	
3	13684-19F10	HOSE (11X15X90)	1	
4	13684-19F20	HOSE (5 3X10 5)	1	
5	13685-48B00	NIPPLE	1	
6	13671-19F00	CLIP	6	
7	13686-19F00	HOSE (7X11X250)	2	
8	13671-19F10	CLIP	1	
9	09352-50903-600	HOSE (5X9X600)	1	E3 E28 L 600 →175
10	13482-20F00	PLATE	1	
11	13447-20F00	PLATE	1	
12	13602-05109	SCREW	4	
13	13612-19F00	BOLT	2	
14	13324-19F00	NUT	2	
15	13267-19F00	ADJUST SCREW ASS'	1	
16	13271-33C00	SPRING	1	
17	13580-19F00	SENSOR ASSY	1	
18	13602-19B50	SCREW	2	
19	13553-19F00	LEVER ASSY	1	
20	13563-19F00	PIN	2	
21	13615-45010	WASHER	2	
22	13279-19F00	PLATE, IDLE ADJUST	1	
23-1	13683-10D20	HOSE (5X9X60)	1	E33
23-2	13684-20F30	HOSE (5X9X40)	1	E33
24	09352-50901-600	HOSE (5X9X600)	1	E33 L 600 →125
25	13685-48B00	NIPPLE	2	E33
26	13684-19F20	HOSE (5 3X10 5)	1	E33
27	13687-20F40	HOSE (5 3X10 5)	1	E33
28	09401-10410	CLIP	4	E33

AIR CLEANER..... C-08
BATTERY..... E-04
CAM CHAIN..... C-04
CAM SHAFT / VALVE.. C-03
CARBURETOR FITTINGS C-07
CRANKCASE COVER.... B-07
CRANKCASE..... B-05
CRANKSHAFT..... B-08
CYLINDER..... B-04
ELECTRICAL..... E-05
FRONT BRAKE HOSE... I-07
FRONT CALIPER..... I-06
FRONT CYLINDER HEAD B-02
FRONT FENDER..... G-11
FRONT FORK DAMPER.. I-02
GEAR SHIFTING..... D-12
HANDLE BAR..... H-02
HANDLE COVER..... H-04
HANDLE SWITCH..... F-11
HEADLAMP HOUSING... G-10
OPTIONAL..... J-07
RADIATOR HOSE..... D-07
RADIATOR..... D-06
REAR CALIPER..... J-05
REAR CUSHION LEVER. J-03
REAR WHEEL..... J-04
SEAT TAIL COVER ... H-11
SEAT..... H-10
SPEEDOMETER..... F-02
STAND..... G-03
TRANSMISSION..... D-10
TURNSIGNAL LAMP.... F-06
WARNING LABEL..... H-09
WATER PUMP..... D-04
WIRING HARNESS..... F-09

FIG.19

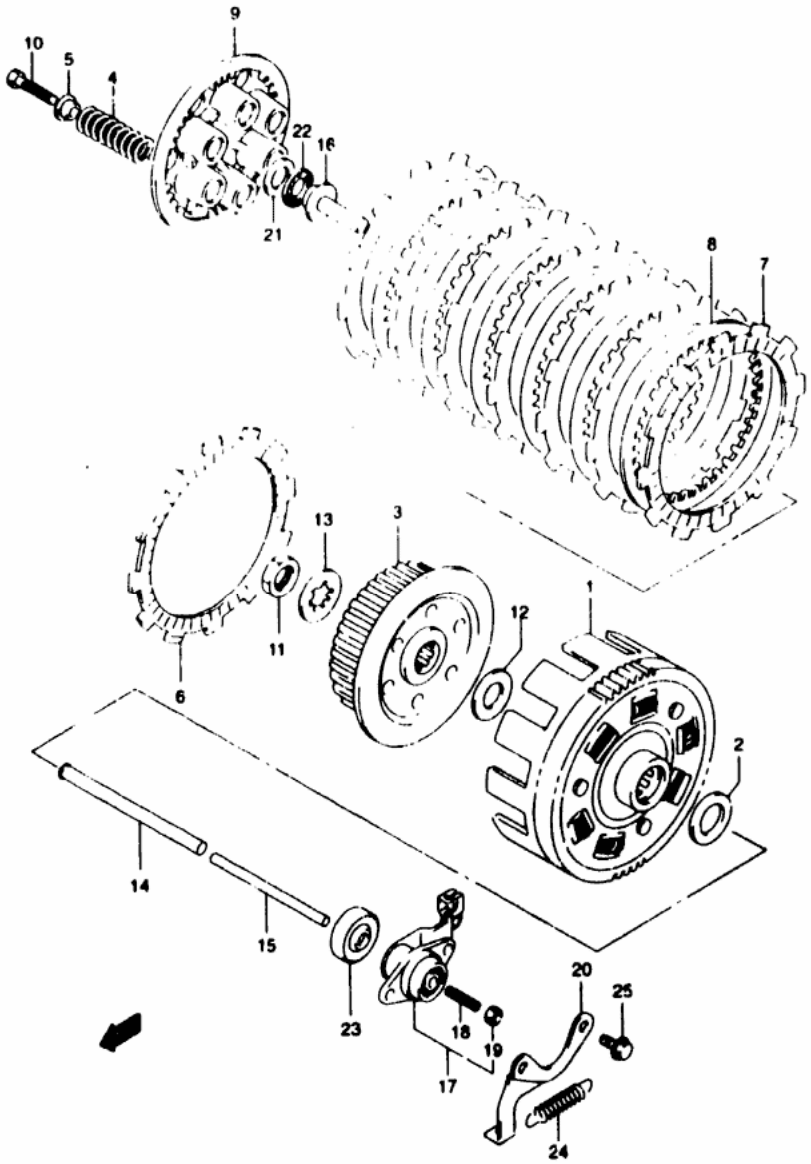

FIG 19 (D- 9) CLUTCH

REF.NO.	PART NO.	DESCRIPTION	Q'TY	REMARKS
1-1	21200-20810	GEAR ASSY, PRIMARY DRIVEN	1	~E NO P503-106336
1-2	21200-20811	GEAR ASSY, PRIMARY DRIVEN	1	E NO P503-106337~
2	09160-20067	WASHER (20X36X3)	1	
3	21411-44101	HUB CLUTCH SLEEVE	1	
4	21413-20F00	SPRING, CLUTCH	6	
5	21414-01D00	SPACER, CLUTCH SLEEVE HUB	6	
6	21440-19F00	PLATE CLUTCH DRIVE	1	
7	21441-37440	PLATE CLUTCH DRIVE	6	
8	21451-28C31	PLATE CLUTCH DRIVEN (T 1.6)	6	
9	21462-14301	DISC CLUTCH PRESSURE	1	
10	09100-06145	BOLT (6X40)	6	
11	09140-20001	NUT	1	
12	09160-20067	WASHER (20X36X3)	1	
13	09167-20006	LOCK WASHER	1	
14	23110-44111	ROD PUSH RH	1	
15	23111-24A01	ROD, CLUTCH PUSH LH	1	
16	23121-44100	PIECE CLUTCH PUSH	1	
17	23200-11D00	SCREW ASSY CLUTCH RELEASE	1	
18	09134-06010	SCREW	1	
19	08210-00067	NUT	1	
20	23246-19F00	SUPPORT, CLUTCH RELEASE	1	
21	09160-15045	WASHER (15.5X28X1)	1	
22	09263-15003	BEARING (15X28X2)	1	
23	09285-06015	OIL SEAL (6X34X5.5)	1	
24	09443-08001	SPRING	1	
25	01500-06163	BOLT	2	

AIR CLEANER..... C-08 CRANKCASE COVER.... B-07 FRONT BRAKE HOSE... I-07 GEAR SHIFTING..... D-12 OPTIONAL..... J-07 REAR WHEEL..... J-04 TRANSMISSION..... D-10
BATTERY E-06 CRANKCASE B-08 FRONT CALIPER I-04 HANDLE BAR H-03 RADIATOR HOSE D-07 SEAT TAIL COVER... H-11 TURNSIGNAL LAMP.... E-06

FIG.45

FIG 45 (H- 8) COWLING INSTALATION PARTS (SV650SX/SY E28) CANADA ONLY

REF.NO.	PART NO.	DESCRIPTION	Q'TY	REMARKS
1	94510-19F00	BRACE COWLING	1	
2	01550-08303	BOLT	2	
3	02142-05123	SCREW	2	
4	02142-05203	SCREW	2	
5	09159-05019	NUT	2	
6	94484-24F00	NUT COWLING	4	
7	09409-06314-5PK	CLIP (BLACK)	2	
8	03241-15163	SCREW	2	
9	09148-05038	NUT	2	
10	94521-19F00	BRACKET SIDE UPPER RH	1	
11	94531-19F00	BRACKET SIDE UPPER LH	1	
12	01500-06123	BOLT UPPER	2	
13	94541-19F00	BRACKET SIDE REAR LH	1	
13A	01500-06163	BOLT SIDE REAR	1	
14	09320-08018	CUSHION (RADIATOR)	2	
15	09320-09016	CUSHION	2	
16	09139-06087	SCREW (M6X20)	2	
17	09139-05054	SCREW (M5X16)	11	

FIG.44

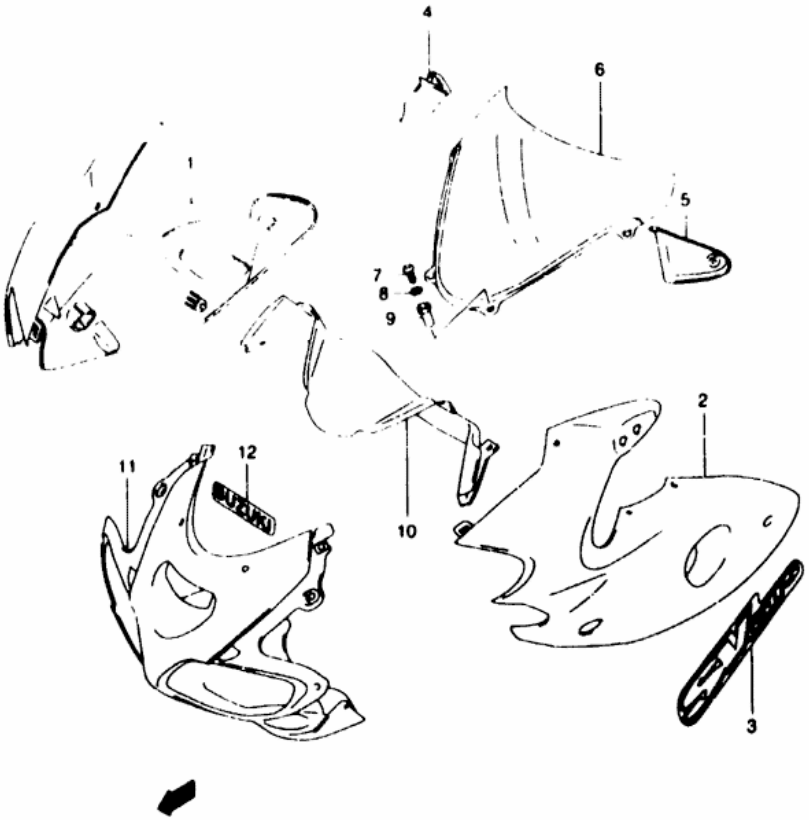

FIG 44 (H- 6) COWLING BODY (SV650SX E26) CANADA ONLY

REF.NO.	PART NO.	DESCRIPTION	Q'TY	REMARKS
1-1	94401-20F00-Y7M	COWL ASSY. SIDE RH (RED)	1	
1-2	94401-20F00-Y9F	COWL ASSY. SIDE RH (YELLOW)	1	
2-1	94402-20F00-Y7M	COWL ASSY. SIDE LH (RED)	1	
2-2	94402-20F00-Y9F	COWL ASSY. SIDE LH (YELLOW)	1	
3-1	68181-20F00-NOH	EMBLEM	2	FOR Y7M
3-2	68181-20F00-NOK	EMBLEM	2	FOR Y9F
4	94413-19F00	PANEL UPPER RH	1	
5	94423-19F00	PANEL UPPER LH	1	
6	94611-19F00	WINDOW SCREEN	1	
7	09139-05025	SCREW (5X14)	2	
8	08322-01053	WASHER	2	
9	09159-05019	NUT	2	
10	94630-19F00	PANEL METER	1	
11-1	94403-19F00-Y7M	COWLING ASSY CENTER (RED)	1	
11-2	94403-19F00-Y9F	COWLING ASSY CENTER (YELLOW)	1	
12	68641-19F00-20G	EMBLEM (SUZUKI) (GRAY)	1	FOR Y9F Y7M

REFER TO FIG 44A(H-7) FOR SV650SY E28

FIG.44A

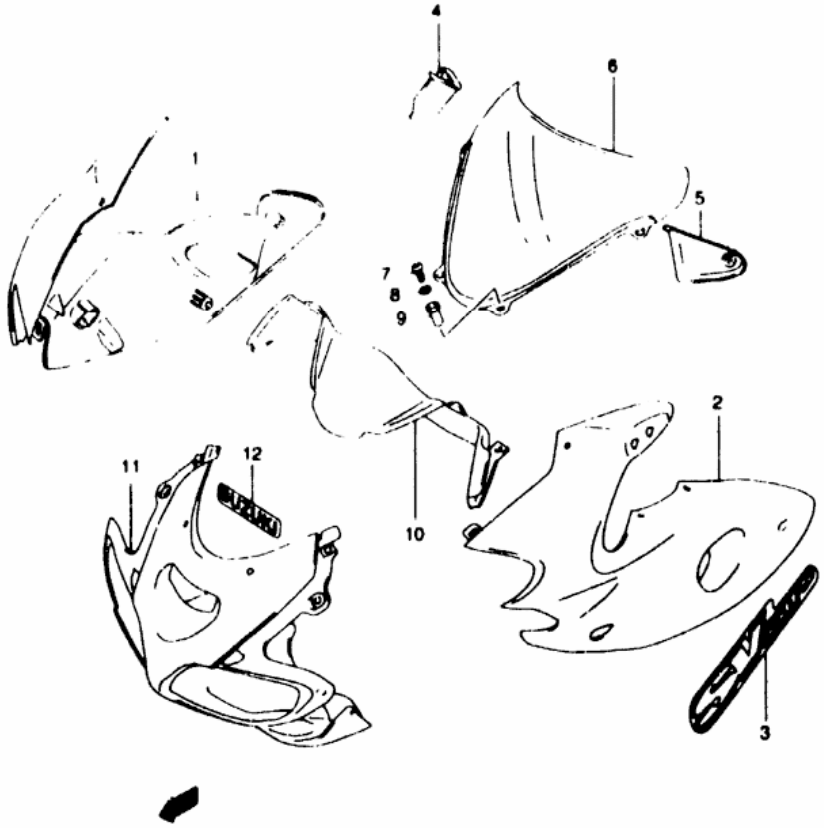

FIG 44A(H- 7) COWLING BODY (SV650SY E28) CANADA ONLY

REF.NO.	PART NO.	DESCRIPTION	Q'TY	REMARKS
1-1	94401-20F00-Y9X	COWL ASSY SIDE RH (BLACK)	1	
1-2	94401-20F00-Z7X	COWL ASSY SIDE RH (RED)	1	
1-3	94401-20F00-Z8X	COWL ASSY SIDE RH (YELLOW)	1	
1-4	94401-20F00-YC2	COWL ASSY SIDE RH (BLUE)	1	
2-1	94402-20F00-Y9X	COWL ASSY SIDE LH (BLACK)	1	
2-2	94402-20F00-Z7X	COWL ASSY SIDE LH (RED)	1	
2-3	94402-20F00-Z8X	COWL ASSY SIDE LH (YELLOW)	1	
2-4	94402-20F00-YC2	COWL ASSY SIDE LH (BLUE)	1	
3-1	68181-20F00-N9Y	EMBLEM	2	FOR Y9X
3-2	68181-20F00-N9V	EMBLEM	2	FOR Z7X
3-3	68181-20F00-N9Z	EMBLEM	2	FOR Z8X
3-4	68181-20F00-N9W	EMBLEM	2	FOR YC2
4	94413-19F00	PANEL UPPER RH	1	
5	94423-19F00	PANEL UPPER LH	1	
6	94611-19F00	WINDOW SCREEN	1	
7	09139-05025	SCREW (5x14	2	
8	08322-01053	WASHER	2	
9	09159-05019	NUT	2	
10	94630-19F00	PANEL METER	1	
11-1	94403-19F00-Y7L	COWLING ASSY CENTER (BLACK)	1	
11-2	94403-19F00-Y7M	COWLING ASSY CENTER (RED)	1	
11-3	94403-19F00-Y9F	COWLING ASSY CENTER (YELLOW)	1	
11-4	94403-19F00-YC2	COWLING ASSY CENTER (BLUE)	1	
12-1	68641-19F00-1ZY	EMBLEM "SUZUKI" (GRAY)	1	FOR Y9X YC2
12-2	68641-19F00-20G	EMBLEM "SUZUKI" (GRAY)	1	FOR Z7X,Z8X

FIG.4

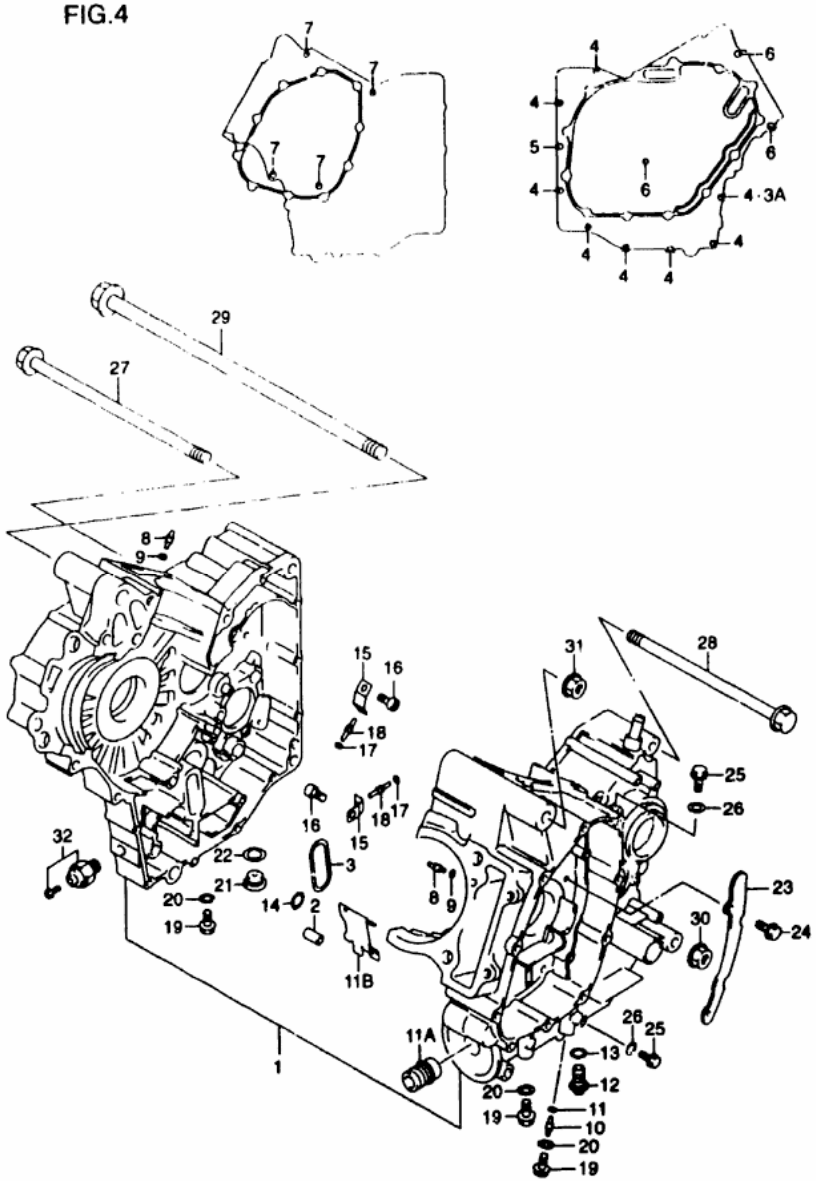

FIG.4 (B- 5) CRANKCASE

REF.NO.	PART NO.	DESCRIPTION	Q'TY	REMARKS
1-1	11301-20830	CRANKCASE SET	1	
1-2	11301-20831	CRANKCASE SET	1	E NO 111683~
1-3	11301-20840	CRANKCASE SET	1	E33
2	09206-11017	PIN (11X20)	2	
3	11315-19F00	O RING, CRANKCASE	1	
3A	09168-06023	GASKET (5 8X13X1 2)	1	E NO 111683~
4	01547-06503	BOLT	8	
5	01547-06507	BOLT	1	
6	07120-08553	BOLT	3	
7	07120-08803	BOLT	4	
8	09493-28010	JET, OIL GALLERY CYLINDER	2	
9	09280-04004	O RING (D 1 2,ID 4 0)	2	
10	09493-28010	JET, OIL GALLERY MISSION	1	
11	09280-04004	O RING (D 1 2 ID 4 0)	1	
11A	16591-06B00	UNION, OIL FILTER STAND	1	
11B	11391-20F10	PLATE, OIL	1	
12	09247-12106	PLUG (12X20)	1	
13	09168-12002	GASKET (12 1X16 2X3 7)	1	
14	09280-12009	O RING (D 1 9,ID 12 6)	1	
15	16438-19F00	PLATE, PISTON COOLING JET	2	
16	09106-06075	BOLT (6X12)	2	
17	09280-04004	O RING (D 1 2,ID 4 0)	2	
18	09493-26007	JET (130)	2	
19	01550-08123	BOLT	3	
20	09168-08029	GASKET	3	
21	09248-16012	PLUG	1	
22	09168-16002	GASKET (16X22X2)	1	

****Engine Cases and Frames** for this model must be ordered on the Frame/Engine Case Order Form (99924-FC003) If you have any questions regarding these procedures, please call Your Parts Coordinator *before* placing your order

FIG.4

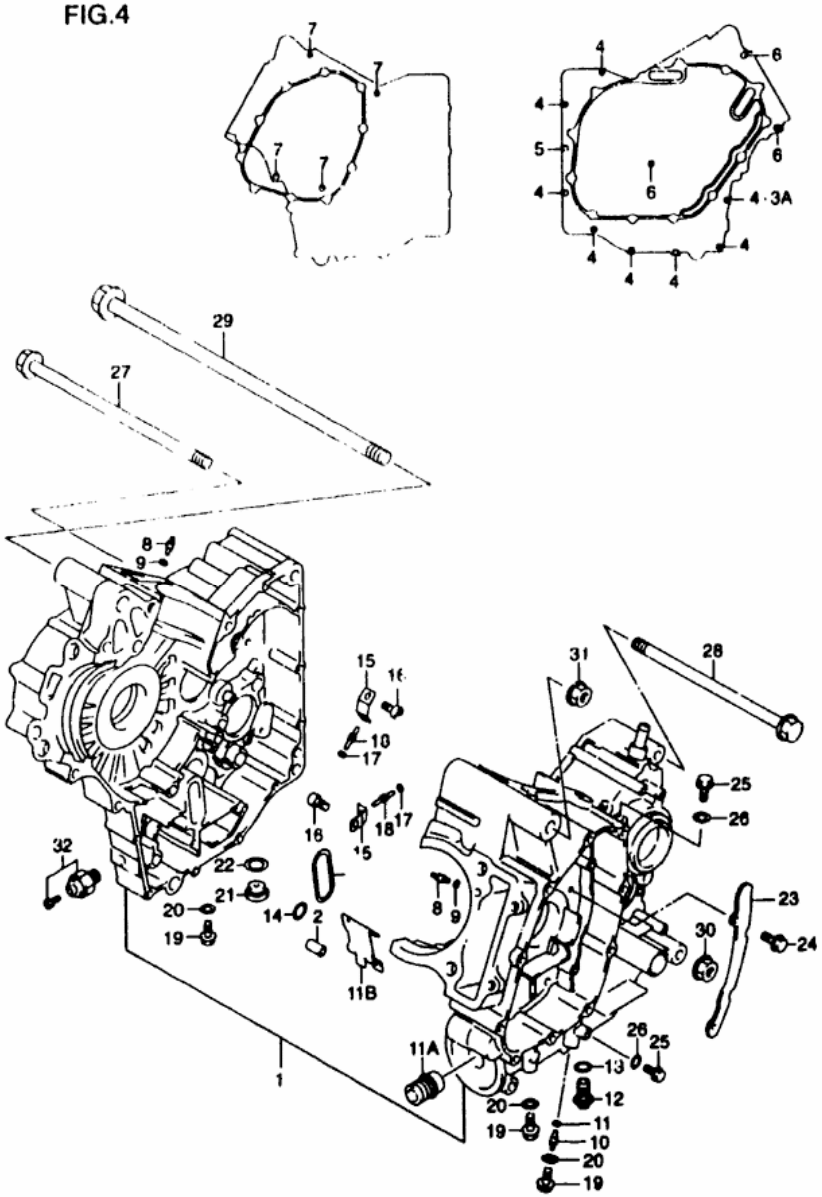

FIG 4 (B- 6) CRANKCASE

REF.NO.	PART NO.	DESCRIPTION	Q'TY	REMARKS
23	11323-19F00	PLATE, OIL SEPARATOR	1	
24	01547-06123	BOLT	2	
25	01550-06123	BOLT	2	
26	09168-06023	GASKET (5 8X13X1 2)	2	
27	09103-10226	BOLT (10X260)	1	
28	09103-10041	BOLT (10X215)	1	
29	09103-12054	BOLT (12X310)	1	
30	08319-31107	NUT	1	
31	08319-31128	NUT	1	
32	37820-33D00	SWITCH ASSY. OIL PRESSURE	1	

FIG.5

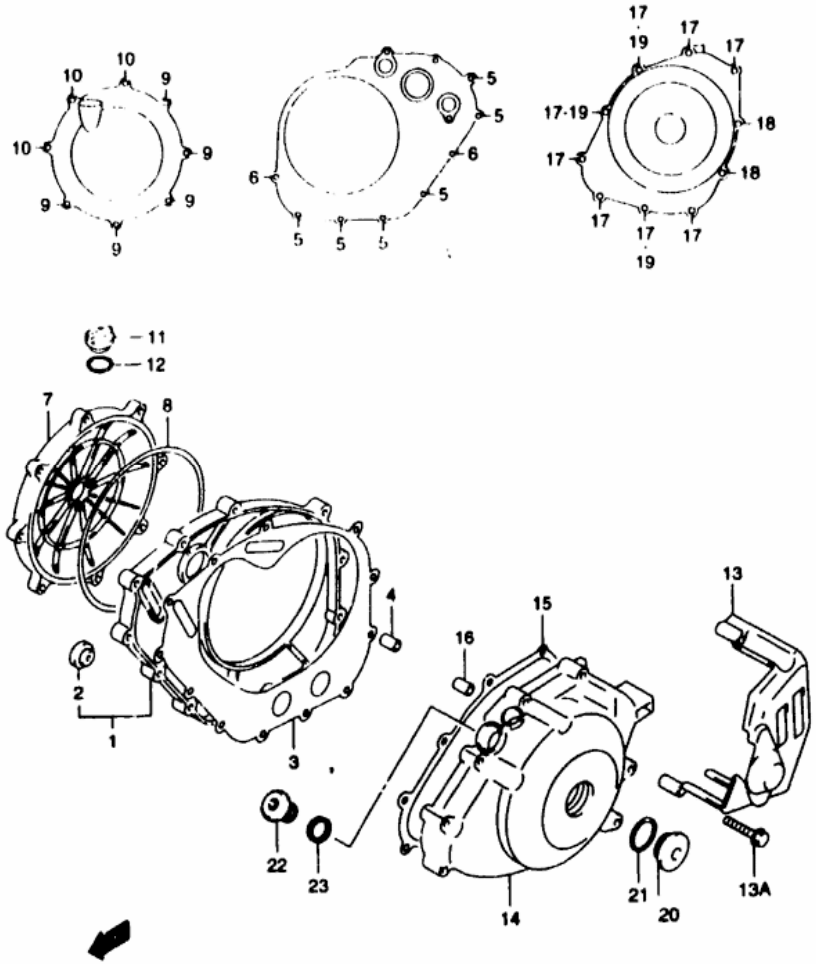

FIG 5 (B- 7) CRANKCASE COVER

REF.NO.	PART NO.	DESCRIPTION	Q'TY	REMARKS
1	11340-19F00	COVER, CLUTCH INNER	1	
2	11971-33210	LENS, OIL LEVEL CHECK	1	
3	11482-19F00	GASKET, CLUTCH COVER INNER	1	
4	04211-09149	PIN	2	
5	09103-06204	BOLT	6	
6	09103-06205	BOLT	2	
7	11370-19F00	COVER, CLUTCH OUTER	1	
8	11484-19F00	O RING, CLUTCH COVER OUTER	1	
9	09103-06180	BOLT	5	
10	09103-06207	BOLT	3	
11	09259-20008	PLUG	1	
12	09280-17003	O RING (D 3.1 ID 16.8)	1	
13	11361-19F00	COVER, ENGINE SPROCKET	1	
13A	01547-06457	BOLT	3	
14	11351-19F00	COVER, MAGNETO	1	
15	11483-19F00	GASKET, MAGNETO COVER	1	
16	04211-09149	PIN	2	
17	01547-06357	BOLT	8	
18	01547-06657	BOLT	2	
19-1	09168-06023	GASKET (5.8X13X1.2)	1	
19-2	09168-06023	GASKET (5.8X13X1.2)	3	E NO 111683~
20	09259-26012	PLUG	1	
21	09280-22008	O RING (D 3.1 ID 22.7)	1	
22	09248-16012	PLUG	1	
23	09168-16002	GASKET (13.8X18.8X0.4)	1	

FIG.6

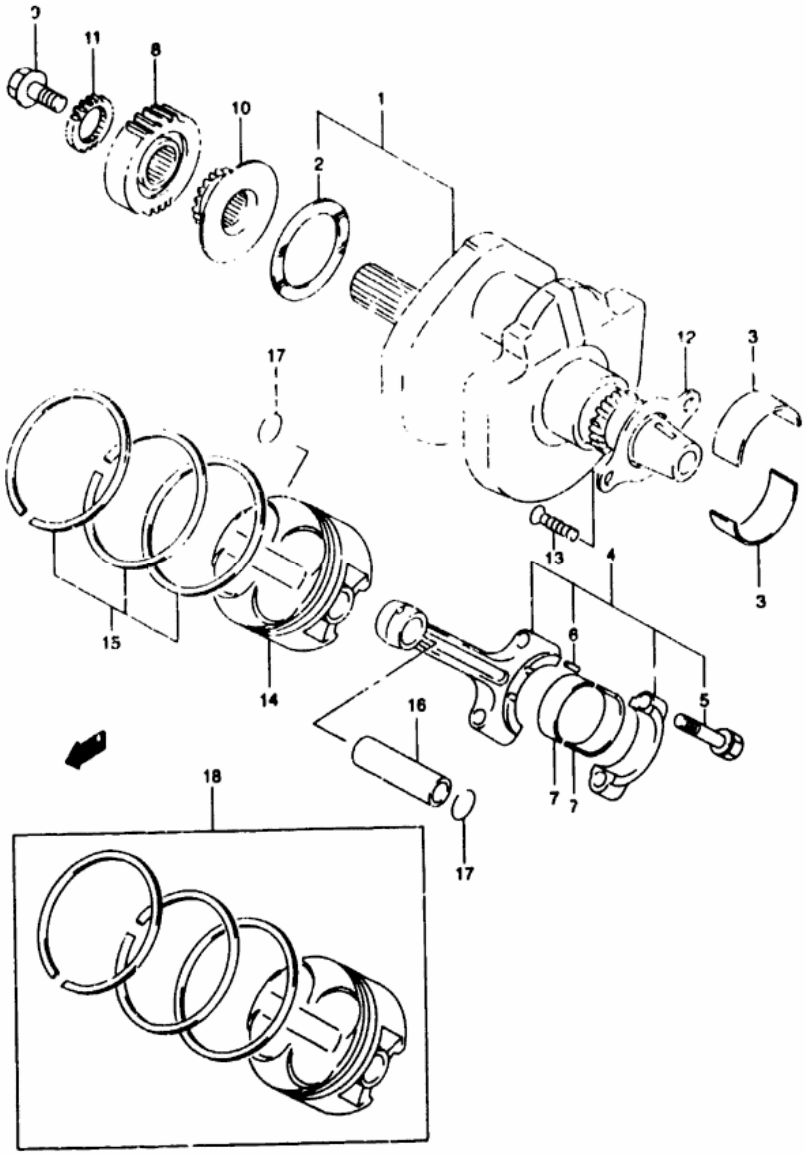

FIG.6 (B-8, CRANKSHAFT

REF.NO.	PART NO.	DESCRIPTION	Q'TY	REMARKS
1	12000-20840	CRANKSHAFT SET	1	
2-1	12228-19F00-0A0	WASHER, THRUST (T 1.925)	1	
2-2	12228-19F00-0B0	WASHER, THRUST (T 1.95)	1	
2-3	12228-19F00-0C0	WASHER, THRUST (T 1.975)	1	
2-4	12228-19F00-0D0	WASHER, THRUST (T 2.0)	1	
2-5	12228-19F00-0E0	WASHER, THRUST (T 2.025)	1	
2-6	12228-19F00-0F0	WASHER, THRUST (T 2.05)	1	
2-7	12228-19F00-0G0	WASHER, THRUST (T 2.075)	1	
2-8	12228-19F00-0H0	WASHER, THRUST (T 2.1)	1	
2-9	12228-19F00-0I0	WASHER, THRUST (T 2.125)	1	
2-10	12228-19F00-0J0	WASHER, THRUST (T 2.15)	1	
3-1	12229-19F10-0A0	BEARING, CRANKSHAFT	4	SEE
3-2	12229-19F10-0B0	BEARING, CRANKSHAFT	4	NOTE
3-3	12229-19F10-0C0	BEARING, CRANKSHAFT	4	BELOW
4	12160-20F00	CONNECTING ROD ASSY	2	
5	12163-17C50	BOLT, CONNECTING ROD	4	
6	12165-27A50	PIN, CONNECTING ROD	4	
7-1	12164-46E01-0A0	BEARING, CRANK PIN	4	SEE
7-2	12164-46E01-0B0	BEARING, CRANK PIN	4	NOTE
7-3	12164-46E01-0C0	BEARING, CRANK PIN	4	BELOW
7-4	12164-46E01-0D0	BEARING, CRANK PIN		
8	21111-20F00	GEAR, PRIMARY DRIVE		
9	21112-19F00	BOLT, PRIMARY DRIVE GEAR		
10	12731-19F00	SPROCKET, CAM CHAIN DRIVE	1	
11	17451-19F00	GEAR, WATER PUMP DRIVE	1	
12	12541-20F00	RETAINER, CRANKSHAFT BRG LH	1	
13	09126-06011	SCREW	2	
14	12111-20F00-0F0	PISTON	2	
15	12140-20F00	RING SET, PISTON	2	
16	12151-05A00	PIN, PISTON	2	
17	09381-20004	CIRCLIP	4	
18-1	12100-20F00-050	PISTON SET (OS.0.5)	2	OPT
18-2	12100-20F00-100	PISTON SET (OS.1.0)	2	OPT

NOTE:

THERE IS A BEARING KIT AVAILABLE FOR THIS MODEL SV650 X (1999)
PART # 99104-BRGKT-020

REFER TO PARTS BULLETIN # 431-92-02 FOR EXPLANATION

FIG.3

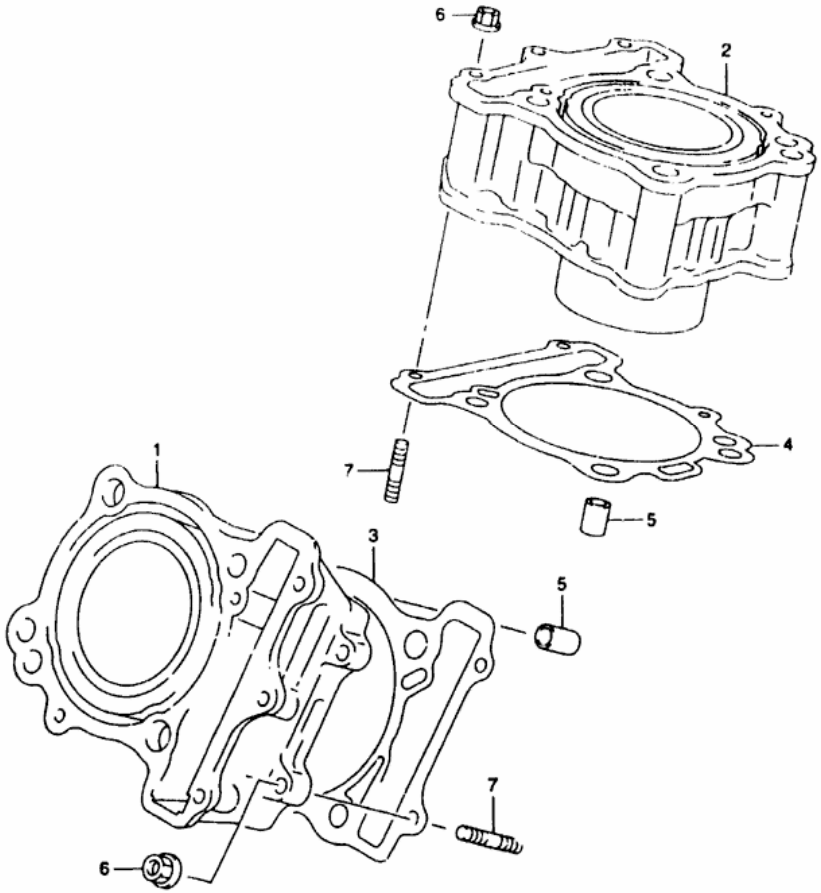

FIG.3 (B-4) CYLINDER

REF.NO.	PART NO.	DESCRIPTION	Q'TY	REMARKS
1-1	11210-20F00-0F0	CYLINDER, FRONT	1	
1-2	11210-20F10-0F0	CYLINDER, FRONT	1	E33
2-1	11220-20F00-0F0	CYLINDER, REAR	1	
2-2	11220-20F10-0F0	CYLINDER, REAR	1	E33
3	11241-19F00	GASKET, CYLINDER FRONT	1	
4	11242-19F00	GASKET, CYLINDER REAR	1	
5	04211-13189	PIN	4	
6	08316-10063	NUT	4	
7	01421-06253	STUD BOLT	4	

FIG.25

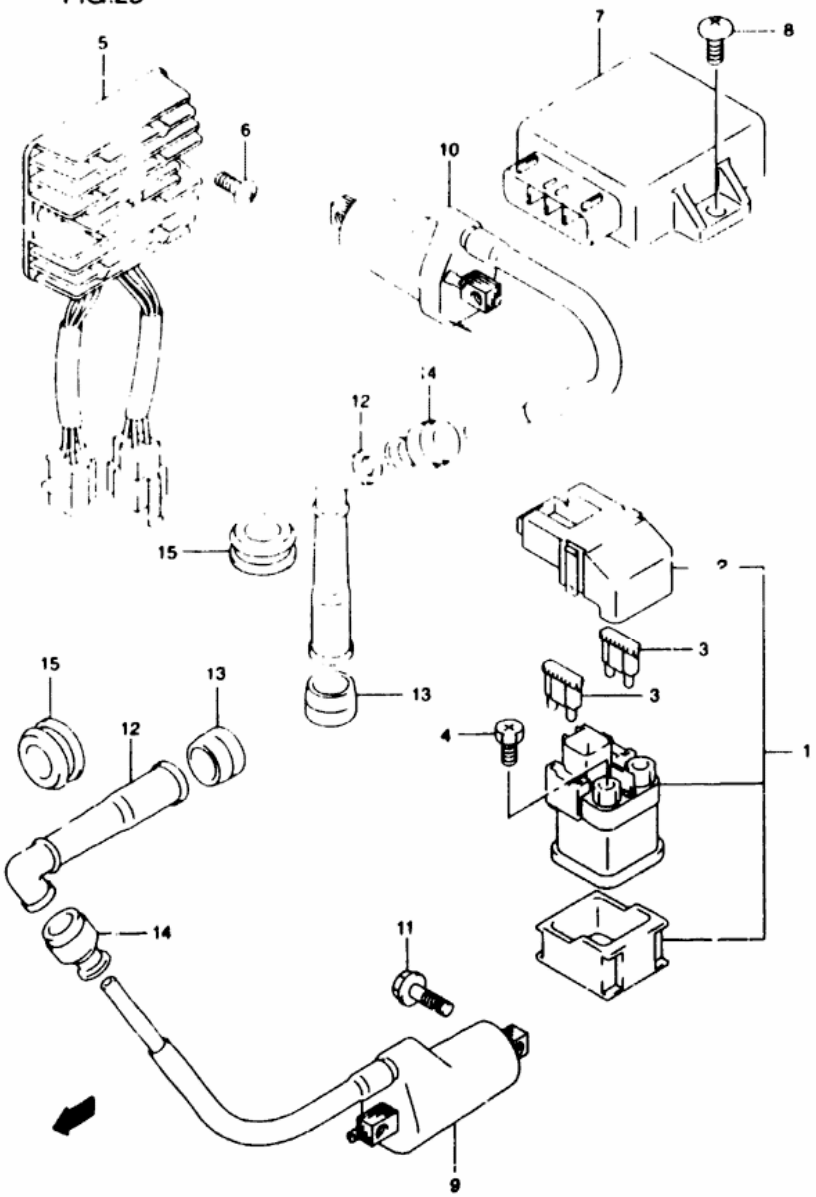

FIG 25 (E-5) ELECTRICAL

REF.NO.	PART NO.	DESCRIPTION	Q'TY	REMARKS
1	31800-21E20	RELAY ASSY, STARTING MOTOR	1	
2	31861-21E20	COVER, RELAY ASSY	1	
3	09481-30101	FUSE (30A)	2	
4	09128-06013	SCREW (6X8)	2	
5	32800-24B01	RECTIFIER ASSY	1	
6	02162-06163	BOLT	2	
7	32900-20F10	IGNITER ASSY	1	
8	03542-06163	SCREW	2	
9	33410-19F00	COIL ASSY IGNITION	1	
10	33420-19F00	COIL ASSY IGNITION	1	
11	01500-06203	BOLT	4	
12	33510-11D00	CAP SPARK PLUG	2	
13	33541-23E01	SEAL SPARK PLUG CAP	2	
14	33542-38B00	SEAL HIGH TENSION CORD	2	
15	33543-19F00	COVER SPARK PLUG CAP	2	

AIR CLEANER..... C-08
BATTERY..... E-04
CAM CHAIN..... C-04
CAM SHAFT / VALVE.. C-03
CRANKCASE COVER.... B-07
CRANKCASE..... B-05
CRANKSHAFT..... B-08
CYLINDER..... B-04
FRONT BRAKE HOSE... I-07
FRONT CALIPER..... I-06
FRONT CYLINDER HEAD B-02
FRONT FENDER..... G-11
GEAR SHIFTING..... D-12
HANDLE BAR..... H-02
HANDLE LEVER..... H-04
HANDLE SWITCH..... F-11
OPTIONAL..... J-07
RADIATOR HOSE..... D-07
RADIATOR..... D-06
REAR CALIPER..... J-05
REAR WHEEL..... J-04
SEAT TAIL COVER.... H-11
SEAT..... H-10
SPEEDOMETER..... F-02
TRANSMISSION..... D-10
TURNSIGNAL LAMP.... F-06
WARNING LABEL..... H-09
WATER PUMP..... D-04

FIG.37

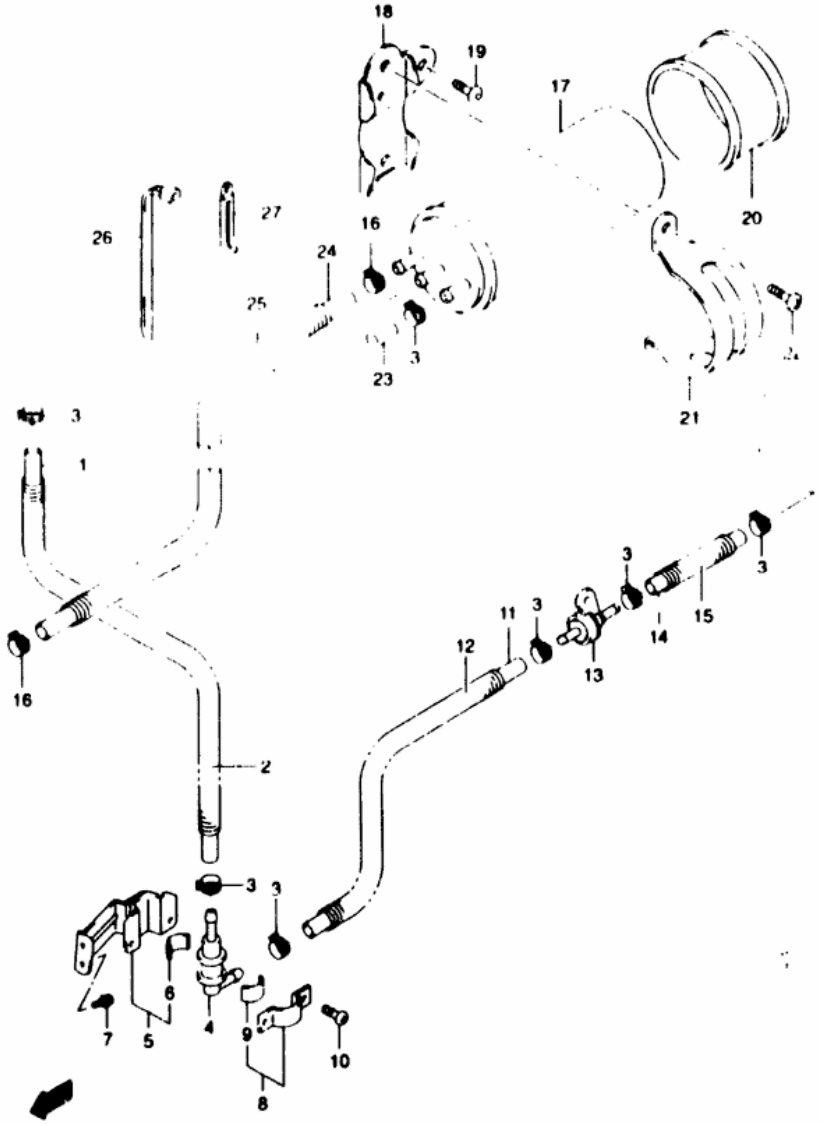

FIG 37 (G- 8) EVAPO SISTEM (E33)

REF.NO.	PART NO.	DESCRIPTION	Q'TY	REMARKS
1	44435-19F00	HOSE TANK & VALVE	1	
2	09351-14152-600	PROTECTOR	1	L 600 ϕ120
3	09401-11413	CLIP	7	
4	44240-17C00	VALVE FUEL TANK BREATHER	1	
5	44890-19F00	PLATE BREATHER VALVE	1	
6	44894-24A00	CUSHION	1	
7	01550-06123	BOLT	2	
8	44892-24A00	PLATE VALVE	1	
9	44894-24A00	CUSHION	1	
10	02142-04083	SCREW	2	
11	44434-19F00	HOSE VALVE & CANISTER NO 1	1	
12	09351-14152-600	PROTECTOR	1	L 600 ϕ190
13	44240-24F00	VALVE 2 WAY	1	
14	09355-54116-600	HOSE VALVE & CANISTER NO 2	1	L 600 ϕ100
15	09351-14152-600	PROTECTOR	1	L 600 ϕ70
16	09401-12404	CLIP	2	
17	17210-26E00	CANISTER	1	
18	44880-19F00	BRACKET, CANISTER	1	
19	09139-06067	SCREW	2	
20	44883-26E00	CUSHION, CANISTER	1	
21	44882-19F00	HOLDER, CANISTER	1	
22	02142-06123	SCREW	1	
23	09251-07003	CAP	1	
24	09359-54112-760	HOSE, CANISTER & CARB	1	
25	09351-14152-00B	PROTECTOR	1	L 2000 ϕ720
26	09407-18402	CLAMP	2	
27	09404-06434	CLAMP	1	

AIR CLEANER..... C-08
BATTERY..... E-04
CRANKCASE COVER.... B-07
CRANKCASE..... B-05
FRONT BRAKE HOSE... I-07
FRONT CALIPER..... I-06
REAR SHIFTING.. ... D-12
HANDLE BAR..... H-02
OPTIONAL..... J-07
RADIATOR HOSE..... D-07
REAR WHEEL..... J-04
SEAT TAIL COVER.... H-11
TRANSMISSION..... D-10
TURNSIGNAL LAMP.... F-06

FIG.34

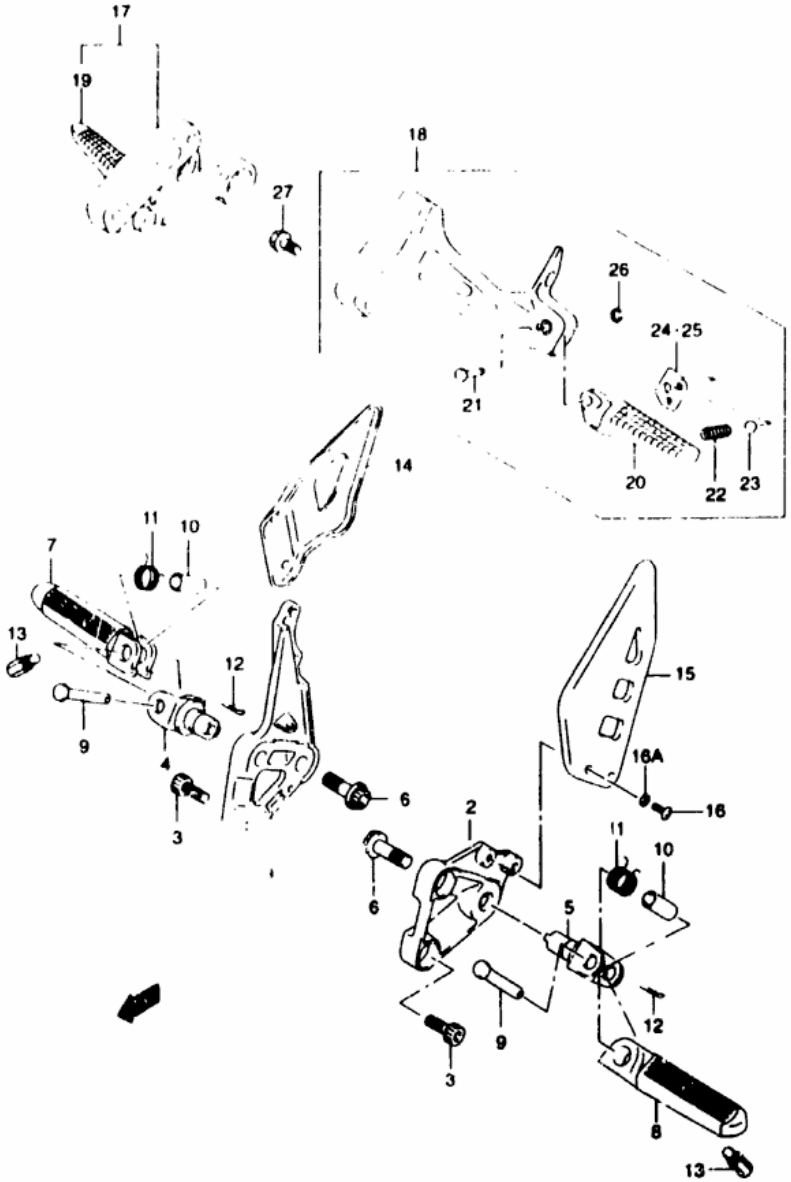

FIG 34 (G- 4) FOOTREST

REF.NO.	PART NO.	DESCRIPTION	Q'TY	REMARKS
1-1	43511-19F00	BRACKET, FRONT FOOTREST RH	1	SV650X/Y
1-2	43511-33E10	BRACKET, FRONT FOOTREST RH	1	SV650SX/SY E28
2-1	43521-19F00	BRACKET, FRONT FOOTREST LH	1	SV650X/Y
2-2	43521-33E00	BRACKET, FRONT FOOTREST LH	1	SV650SX/SY E28
3	07130-08203	BOLT	4	
4	43530-17E01	HOLDER FOOTREST RH	1	
5	43540-17E00	HOLDER, FOOTREST LH	1	
6	09106-10064	BOLT	2	
7	43510-02F11	BAR, FOOTREST RH	1	
8	43520-02F11	BAR FOOTREST LH	1	
9	09200-08057	PIN	2	
10	09180-08149	SPACER (8.1X12X22)	2	
11	09448-18022	SPRING	2	
12	04111-25158	COTTER PIN	2	
13	43576-07D01	BOLT BANK SENSOR	2	
14	43571-33E01	GUARD, FRONT FOOTREST RH	1	
15	43576-19F00	GUARD, FRONT FOOTREST LH	1	
16	09139-05054	SCREW (5X16)	2	
16A	09161-08018	WASHER	2	
17	43600-19F00	FOOTREST ASSY, PILLION RH	1	
18	43700-19F00	FOOTREST ASSY, PILLION LH	1	
19	43611-33E10	BAR, PILLION FOOTREST RH	1	
20	43621-33E10	BAR, PILLION FOOTREST LH	1	
21	09208-06007	PIN	2	
22	09440-05005	SPRING	2	
23	06111-07004	BALL	2	
24	43816-33E21	PLATE, PILLION RH	1	
25	43826-33E21	PLATE, PILLION LH	1	
26	08332-11043	E RING	2	
27	01550-08163	BOLT	4	

FIG.32

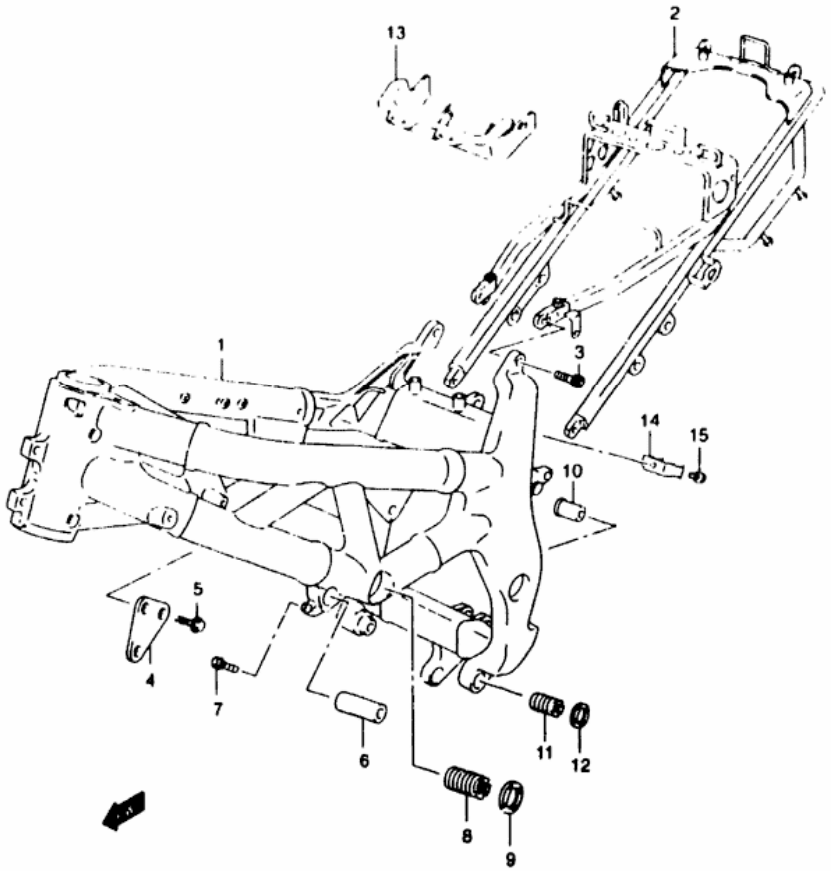

FIG 32 (G-2) FRAME

REF.NO.	PART NO.	DESCRIPTION	Q'TY	REMARKS
1-1	41100-19F01-13L	FRAME (SILVER)	1	MODEL X
1-2	41100-19F02-13L	FRAME (SILVER)	1	MODEL Y
2	41200-19F01	RAIL SEAT	1	
3	07130-10303	BOLT	4	
4	41991-19F00	PLATE MOUNT FRONT RH	1	
5	01550-08203	BOLT	2	
6	41198-19F00	SPACER HEAD MOUNT	3	
7	07130-08307	BOLT	3	
8	41921-19F00	BOLT CRANKCASE ADJUST	1	
9	41922-19F00	NUT CRANKCASE ADJUST	1	
10	41941-19F00	SPACER CRANKCASE REAR UPPER	1	
11	41921-33E11	BOLT CRANKCASE ADJUST	1	
12	41922-33E00	NUT CRANKCASE ADJUST	1	
13	47411-19F01	HOLDER ELECTRIC PART	1	
14	47413-19F00	PLATE RELAY	1	
15	01550-06123	BOLT	1	

******Engine Cases and Frames** for this model must be ordered on the Frame/Engine Case Order Form (99924-FC003). If you have any questions regarding these procedures, please call your Parts Coordinator *before* placing your order.

FIG.38

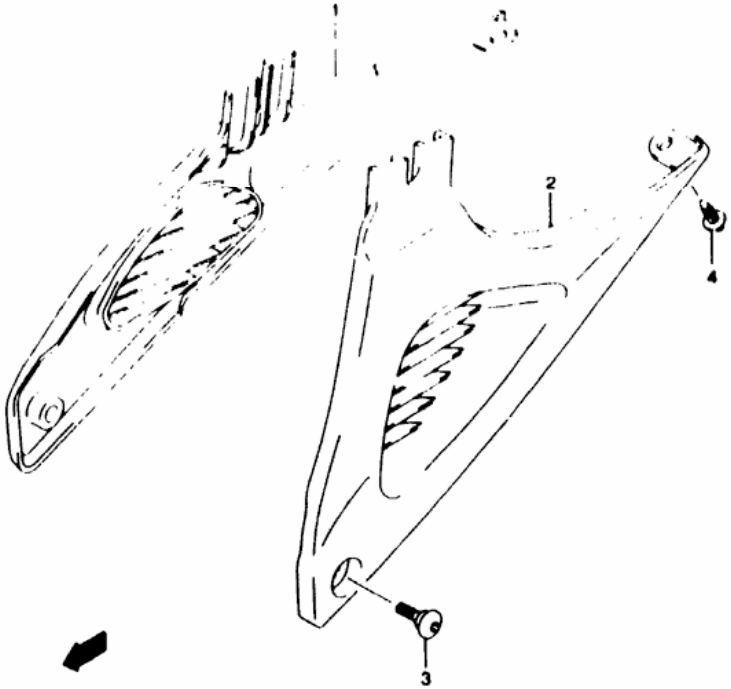

FIG 38 (G-ɔ, FRAME COVER

REF.NO.	PART NO.	DESCRIPTION	Q'TY	REMARKS
1	47111-19F00	COVER, FRAME RH	1	
2	47211-19F00	COVER, FRAME LH	1	
3	09139-05054	SCREW (M5X16)	2	
4	09409-06314-5PK	CLIP (BLACK)	2	

FIG.53

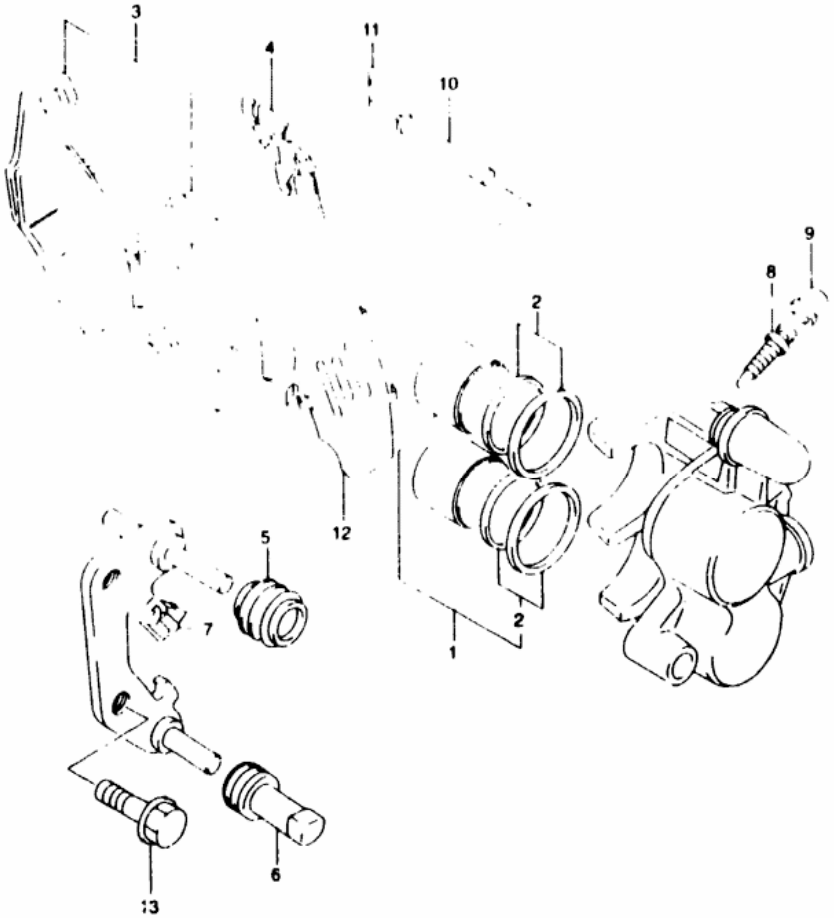

FIG 53 (1-6) FRONT CALIPER

REF.NO.	PART NO.	DESCRIPTION	Q'TY	REMARKS
	59100-33D80	CALIPER ASSY. FRONT RH	1	
	59300-33D80	CALIPER ASSY. FRONT LH	1	
1	59300-33830	PISTON SET	2	
2	59300-33840	SEAL SET PISTON	2	
3-1	59101-33850	PAD SET RH	1	
3-2	59301-33850	PAD SET LH	1	
4-1	59115-33D00	SPRING RH	1	
4-2	59315-33D00	SPRING LH	1	
5	59112-44B00	BOOT	2	
6	59313-36500	INSULATOR	2	
7	59116-33D00	GUIDE	2	
8	59121-18410	BLEEDER	4	
9	55156-66310	CAP	4	
10	59141-44B01	PIN	2	
11	69142-45000	CLIP	2	
12	59171-33D00	SHIM	2	
13	01550-10253	BOLT	4	

FIG.54

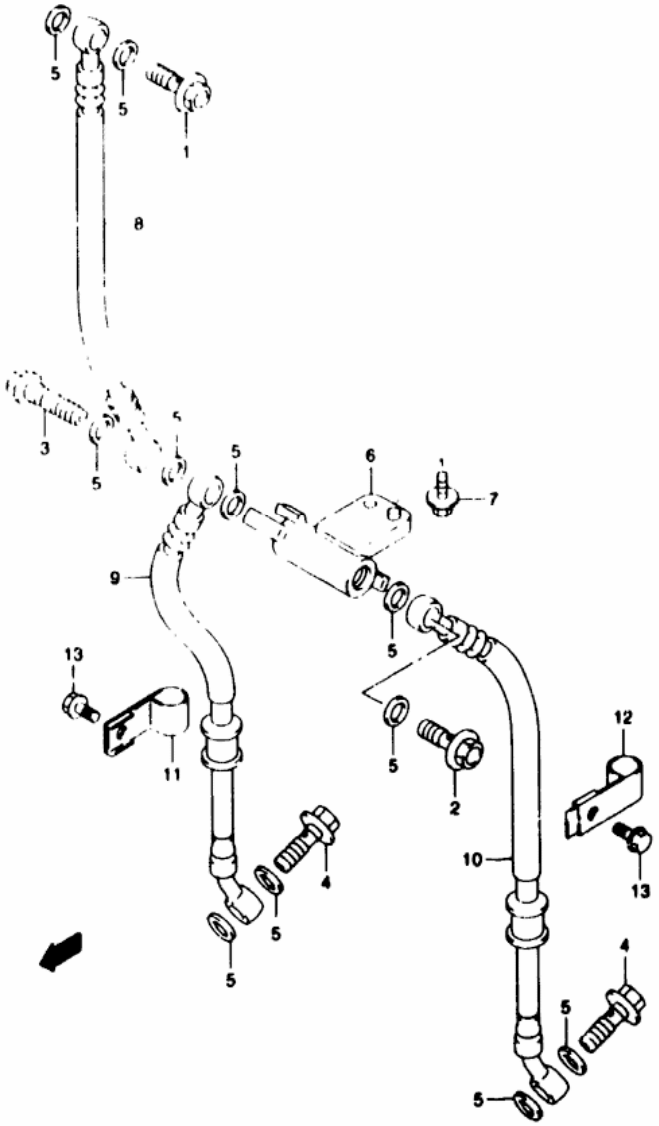

FIG 54 (1- 7) FRONT BRAKE HOSE

REF.NO.	PART NO.	DESCRIPTION	Q'TY	REMARKS
1	09360-10041	BOLT UPPER (10X1 00X22)	1	
2	09360-10041	BOLT JOINT (10X1 00X22)	1	
3	09360-10043	BOLT (10X1 00X36)	1	
4	09360-10042	BOLT LOWER (10X1 25X22)	2	
5	09161-10009	WASHER (10X15X1 5)	11	
6	59491-17E00	JOINT BRAKE HOSE	1	
7	01550-06163	BOLT	1	
8	59480-20F10	HOSE FRONT BRAKE NO 1	1	[illegible]
9	59240-20F00	HOSE FRONT BRAKE NO 2 RH	1	
10	59440-20F00	HOSE FRONT BRAKE NO 2 LH	1	
11	59268-45D00	CLAMP BRAKE HOSE NO 2 RH	1	
12	59269-20F00	CLAMP BRAKE HOSE NO 2 LH	1	
13	01550-06123	BOLT	2	

FIG.1

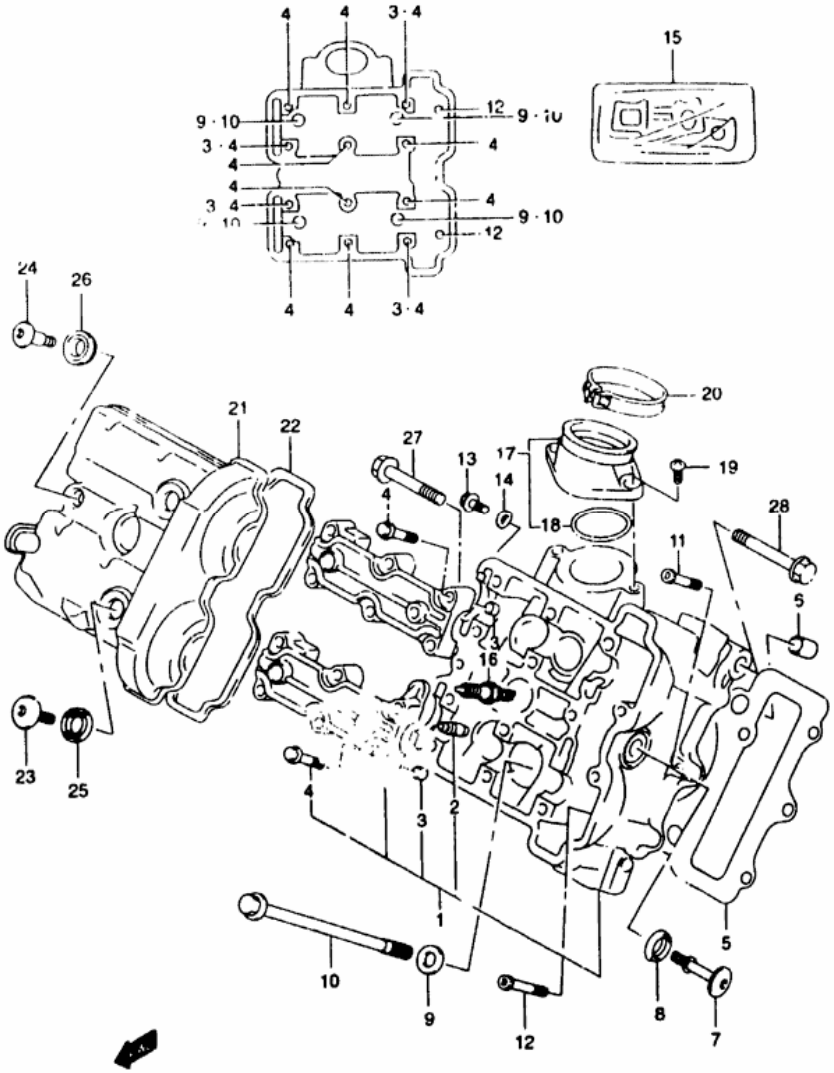

FIG 1 (B- 2) FRONT CYLINDER HEAD

REF.NO.	PART NO.	DESCRIPTION	Q'TY	REMARKS
1-1	11101-20F00	HEAD ASSY, CYLINDER FRONT	1	
1-2	11101 20F10	HEAD ASSY, CYLINDER FRONT	1	E33
2	11115-16D72	GUIDE, VALVE	4	
3	09206-08001	PIN (6 2X8X11)	4	
4	09103-06026	BOLT (6X39)	12	
5	11141-20F00	GASKET, CYLINDER HEAD	1	
6	04211-13189	PIN	2	
7	11161-33E00	BOLT, CYLINDER HEAD SIDE FACE	1	
8	11191-13E00	WASHER, HEAD COVER	1	
9	09160-10082	WASHER (10 5X19X2 0)	4	
10	09103-10272	BOLT (10X160)	4	
11	07120-06403	BOLT	1	
12	09103-06103	BOLT (6X70)	2	
13	07120-06123	BOLT	1	
14	09168-06023	GASKET (5 8X13X1 2)	1	
15	11401-20860	GASKET SET	1	OPT
16-1	09482-00456	SPARK PLUG (NGK,CR8E)	1	
16-2	09482-00457	SPARK PLUG (DENSO,U24ESR-N)	1	
16-3	09482-00458	SPARK PLUG (NGK,CR9E)	1	OPT
16-4	09482-00459	SPARK PLUG (DENSO,U27ESR-N)	1	OPT
16-5	09482-00460	SPARK PLUG (NGK,CR10E)	1	OPT
16-6	09482-00461	SPARK PLUG (DENSO,U31ESR-N)	1	OPT
17	13101-20F00	PIPE ASSY, INTAKE FRONT	1	
18	09280-46006	O RING	1	
19	02122-06163	SCREW	2	
20	09402-56208	CLAMP	1	
21	11171-19F00	COVER, CYLINDER HEAD FRONT	1	
22	11173-19F00	GASKET, CYLINDER HEAD COVER	1	
23	09106-07009	BOLT (7X17.5)	2	
24	09106-07010	BOLT (7X31)	1	
25	09161-11008	WASHER	2	
26	11192-13E00	CUSHION, HEAD COVER BOLT	1	
27	01550-10807	BOLT	1	
28	01550-10807	BOLT	1	

AIR CLEANER..... C-08 CRANKCASE COVER.... B-07 FRONT BRAKE HOSE... I-07 GEAR SHIFTING..... D-12 OPTIONAL..... J-07 REAR WHEEL..... J-04 TRANSMISSION..... D-10
BATTERY F-06 CRANKCASE B-05 FRONT CALIPER I-06 HANDLE BAR H-12 RADIATOR HOSE D-07 SEAT TAIL COVER.... H-11 TURNSIGNAL LAMP.... F-06

FIG.40

FIG 40 (G-11) FRONT FENDER

REF.NO.	PART NO.	DESCRIPTION	Q'TY	REMARKS
1-1	53109-19F00-Y7E	FENDER FRONT (BLUE)	1	MODEL X
1-2	53109-19F00-Y7M	FENDER FRONT (RED)	1	MODEL X, Y
1-6	53109-19F00-YC2	FENDER FRONT (BLUE)	1	MODEL Y
2	53120-3[illegible]00	PLATE FRONT FENDER	2	
3	01547-[illegible]07	BOLT	4	

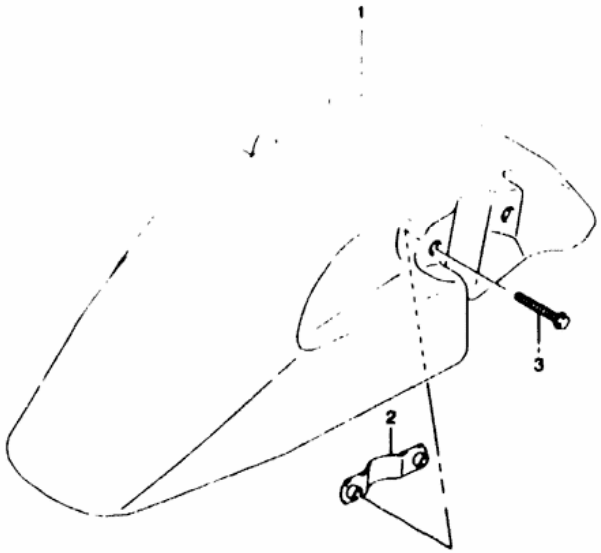

AIR CLEANER..... C-08
BATTERY..... E-04
CAM CHAIN..... C-04
CRANKCASE COVER.... B-07
CRANKCASE..... B-05
CRANKSHAFT..... B-08
FRONT BRAKE HOSE... I-07
FRONT CALIPER..... I-06
FRONT CYLINDER HEAD B-02
GEAR SHIFTING..... D-12
HANDLE BAR..... H-02
HANDLE LEVER..... H-06
OPTIONAL..... J-07
RADIATOR HOSE..... D-07
RADIATOR..... D-06
REAR WHEEL..... J-04
SEAT TAIL COVER.... H-11
SEAT..... H-10
TRANSMISSION..... D-10
TURN SIGNAL LAMP.... F-06
WARNING LABEL..... H-09

FIG.50

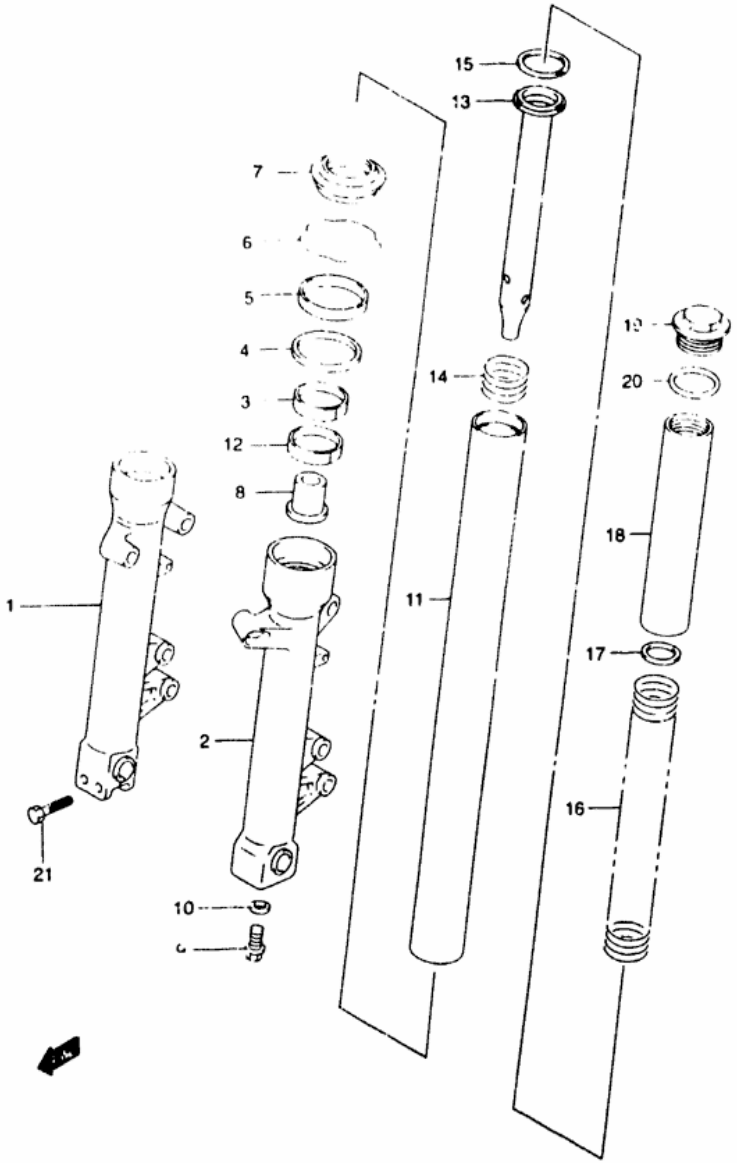

FIG 50 (1- 2) FRONT FORK DAMPER

REF.NO.	PART NO.	DESCRIPTION	Q'TY	REMARKS
	51103-20F20	DAMPER ASSY, FRONT FORK RH	1	SV650X/Y
	51104-20F20	DAMPER ASSY, FRONT FORK LH	1	SV650X/Y
1	51130-20F00	TUBE, OUTER RH	1	
2	51140-20F00	TUBE, OUTER LH	1	
3	51167-26E10	METAL, SLIDE	2	
4	51158-05A00	WASHER	2	
5	51153-14F00	SEAL, OIL	2	
6	51156-49440	CIRCLIP	2	
7	51173-14F00	SEAL, DUST	2	
8	51195-33D10	PIECE, OIL LOCK	2	
9	51147-16510	BOLT	2	
10	51148-41310	WASHER	2	
11	51110-20F00	TUBE, INNER	2	
12	51121-33D10	PISTON	2	
13	51146-20F20	CYLINDER	2	SV650X/Y
14	51177-06C00	SPRING	2	
15	51196-33D10	RING, PISTON	2	
16	51171-19F	SPRING, FRONT	2	
17	51356-10D0	WASHER	2	
18-1	51176-20F20	SPACER, SPRING	2	SV650X/Y
19	51351-33D00	CAP	2	
20	09280-32001	O RING	2	
21	01550-08457	BOLT, RH	2	

AIR CLEANER..... C-08 CRANKCASE COVER.... B-07 FRONT BRAKE HOSE... I-07 GEAR SHIFTING..... D-12 OPTIONAL..... J-07 REAR WHEEL..... J-04 TRANSMISSION..... D-10
BATTERY..... E-04 CRANKCASE..... B-05 FRONT CALIPER..... I-04 HANDLE BAR..... H-02 RADIATOR HOSE..... D-07 SEAT TAIL COVER.... H-11 TURNSIGNAL LAMP.... F-06

FIG.55

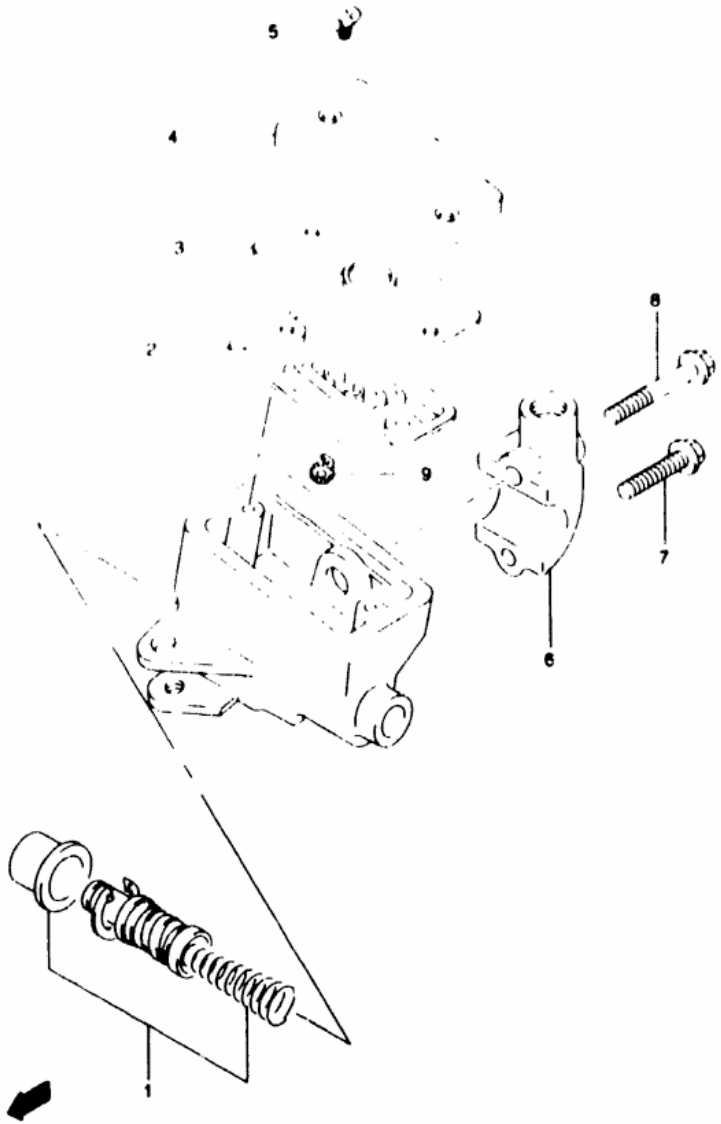

FIG 55 (I- 8) FRONT MASTER CYLINDER (SV650X/Y)

REF.NO.	PART NO.	DESCRIPTION	Q'TY	REMARKS
	59600-20C20	CYLINDER ASSY. FRONT MASTER	1	
1	59600-45860	PISTON/CUP SET	1	
2	59667-49460	DIAPHRAGM	1	
3	59668-41C00	PLATE DIAPHRAGM	1	
4	59669-41C00	CAP	1	
5	69689-49300	SCREW	2	
6	59671-44300	HOLDER	1	
7	59675-19C00	BOLT HOLDER (6X25)	1	
8	59675-19C10	BOLT HOLDER (6X38)	1	
9	59664-48B00	PROTECTOR	1	

REFER TO FIG 55A(I-9) FOR SV650 SX SY E28

FIG.55A

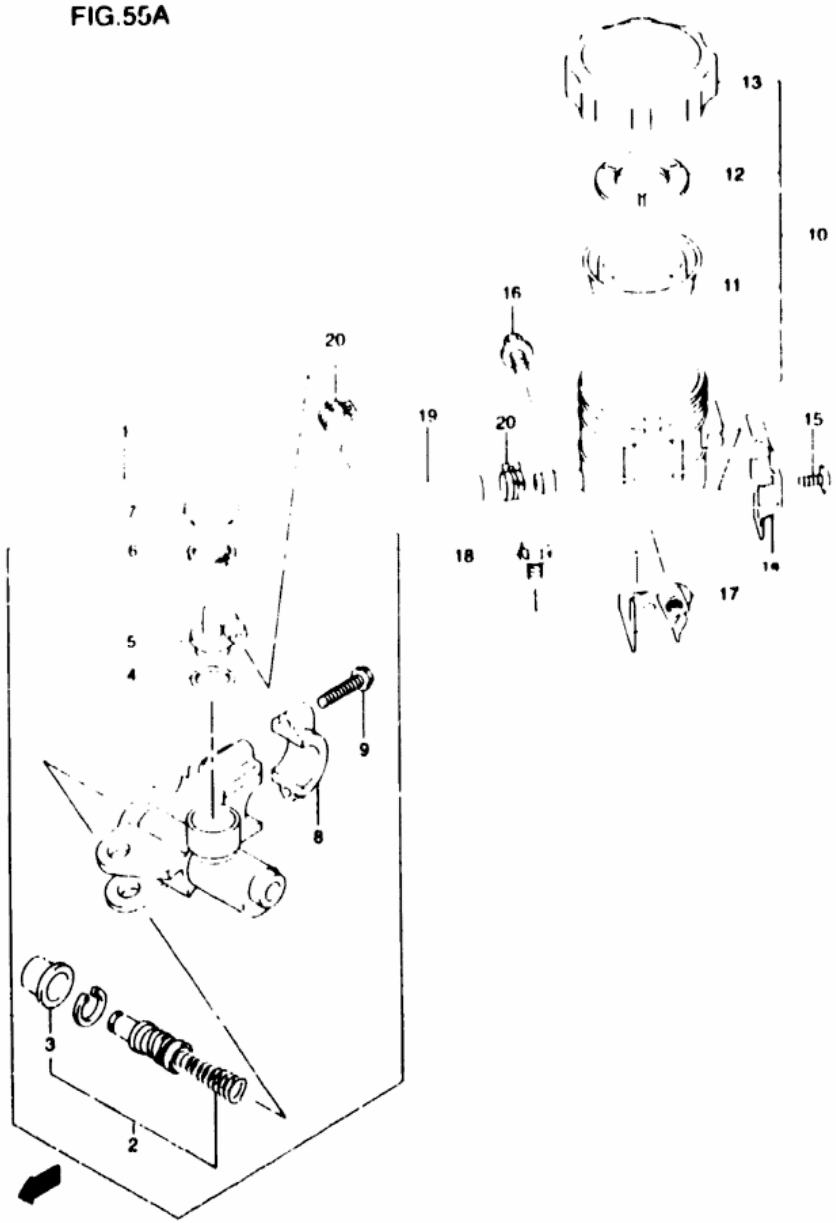

FIG 55A(1-9) FRONT MASTER CYLINDER (SV650SX/SY E28) CANADA ONLY

REF.NO.	PART NO.	DESCRIPTION	Q'TY	REMARKS
1	59600-32C01	CYLINDER ASSY FRONT MASTER	1	
2	59600-45B60	PISTON/CUP SET	1	
3	59666-44300	BOOT	1	
4	69686-34200	O RING	1	
5	59672-17C00	CONNECTOR	1	
6	59674-04B20	CIRCLIP	1	
7	59673-17C00	COVER DUST	1	
8	59671-36500	HOLDER (BLACK)	1	
9	59675-19C00	BOLT HOLDER (6×25)	2	
10	59740-07D00	TANK ASSY RESERVOIR	1	
11	59667-18441	DIAPHRAGM	1	
12	59668-18441	PLATE DIAPHRAGM	1	
13	59669-07D00	CAP	1	
14	59743-17C00	PLATE RESERVOIR TANK CAP	1	
15	02142-04103	SCREW	1	
16	01550-06123	BOLT	1	
17	59750-33E01	BRACKET RESERVOIR TANK FRONT	1	
18	01550-06123	BOLT	1	
19	59731-32C00	HOSE FRONT RESERVOIR TANK	1	
20	59735-17C00	CLAMP RESERVOIR TANK	2	

AIR CLEANER..... C-08
BATTERY..... E-04
CRANKCASE COVER.... B-07
CRANKCASE..... B-05
FRONT BRAKE HOSE... I-07
FRONT CALIPER..... I-06
GEAR SHIFTING..... D-12
HANDLE BAR..... H-02
OPTIONAL..... J-07
RADIATOR HOSE..... D-07
REAR WHEEL..... J-04
SEAT TAIL COVER.... H-11
TRANSMISSION..... D-10
TURNSIGNAL LAMP.... F-06

FIG.52

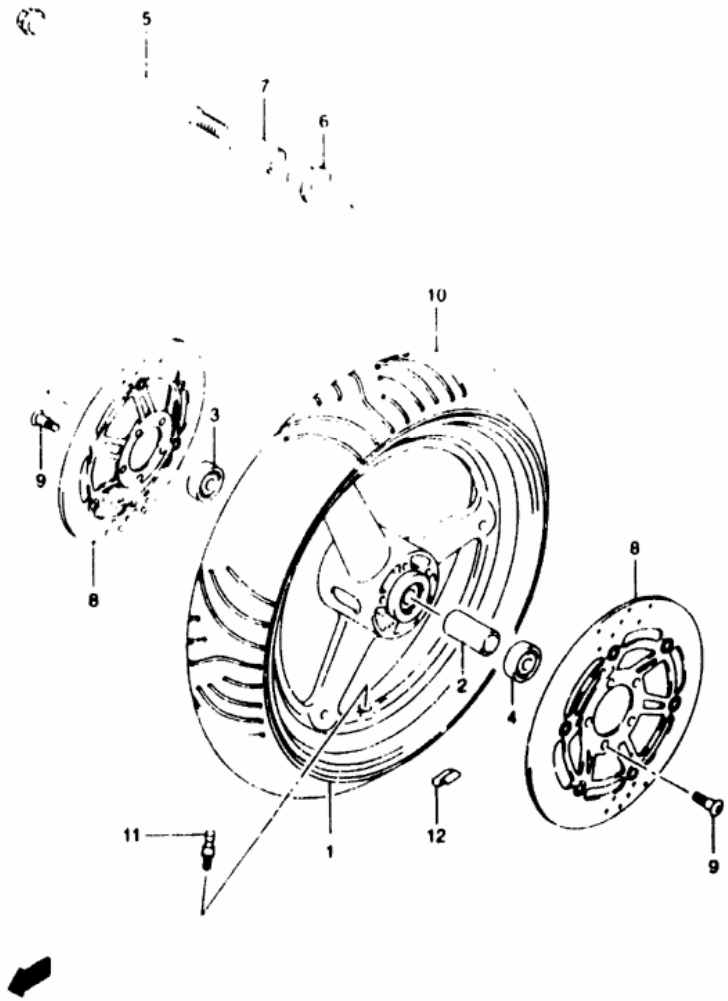

FIG 52 (I- 5) FRONT WHEEL

REF.NO.	PART NO.	DESCRIPTION	Q'TY	REMARKS
1-1	54111-03FA0-Y6G	WHEEL FRONT (17XMT3.50) (SILVER)	1	MODEL X
1-2	54111-03FA0-12R	WHEEL FRONT (17XMT3.50) (SILVER)	1	MODEL X
2	09180-17094	SPACER (17.5X22.5X73)	1	
3	08133-62037	BEARING RH	1	
4	08113-62037	BEARING LH	1	
5	54711-07F00	AXLE FRONT	1	
6	54740-32[illegible]0	SPACER FRONT AXLE RH	1	
7	54741-03FA0	SPACER FRONT AXLE RH	1	
8	5921[illegible]-08F00	DISC FRONT BRAKE	2	
9	091[illegible]-08125	BOLT (8X[illegible])	[illegible]	
10	5511[illegible]-20F0[illegible]	TIRE FRONT [illegible] METZELER	1	
11	431[illegible]-24A0[illegible]	VALVE A[illegible] WHEEL R[illegible]	1	
12-1	55411-00A00	BALANCER WHEEL [illegible]	[illegible]	
12-2	55412-00A01	BALANCER WHEEL [illegible]	[illegible]	

FIG.36

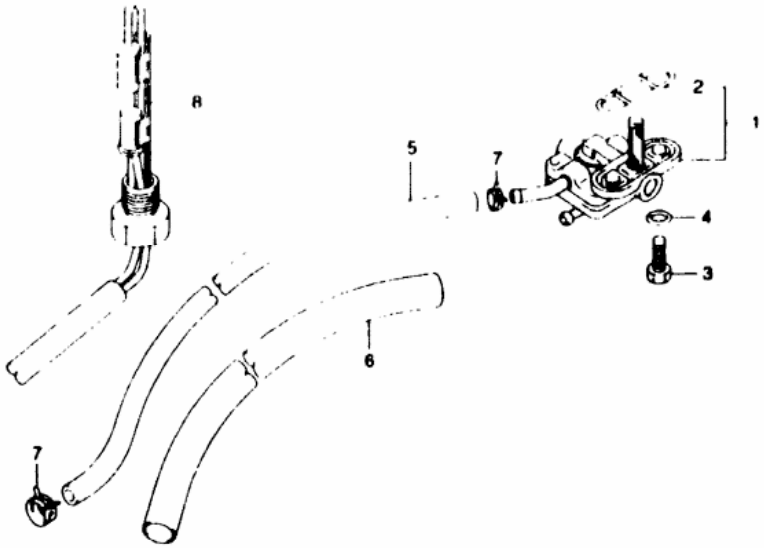

FIG 36 (G-7) FUEL COCK

REF.NO.	PART NO.	DESCRIPTION	Q'TY	REMARKS
1	44300-19F00	COCK ASSY. FUEL	1	
2	44351-33E00	O RING, JOINT	1	
3	09128-06U57	BOLT	2	
4	09168-06026	GASKET (6.4X11.5X0.8)	2	
5	09355-50105-600	HOSE FUEL (L 600 φ340)	1	
6	09351-14152-600	PROTECTOR (L 600 φ280)	1	
7	09401-09403	CLIP	2	
8	34810-19F10	GAUGE ASSY FUEL LEVEL	1	

FIG.35

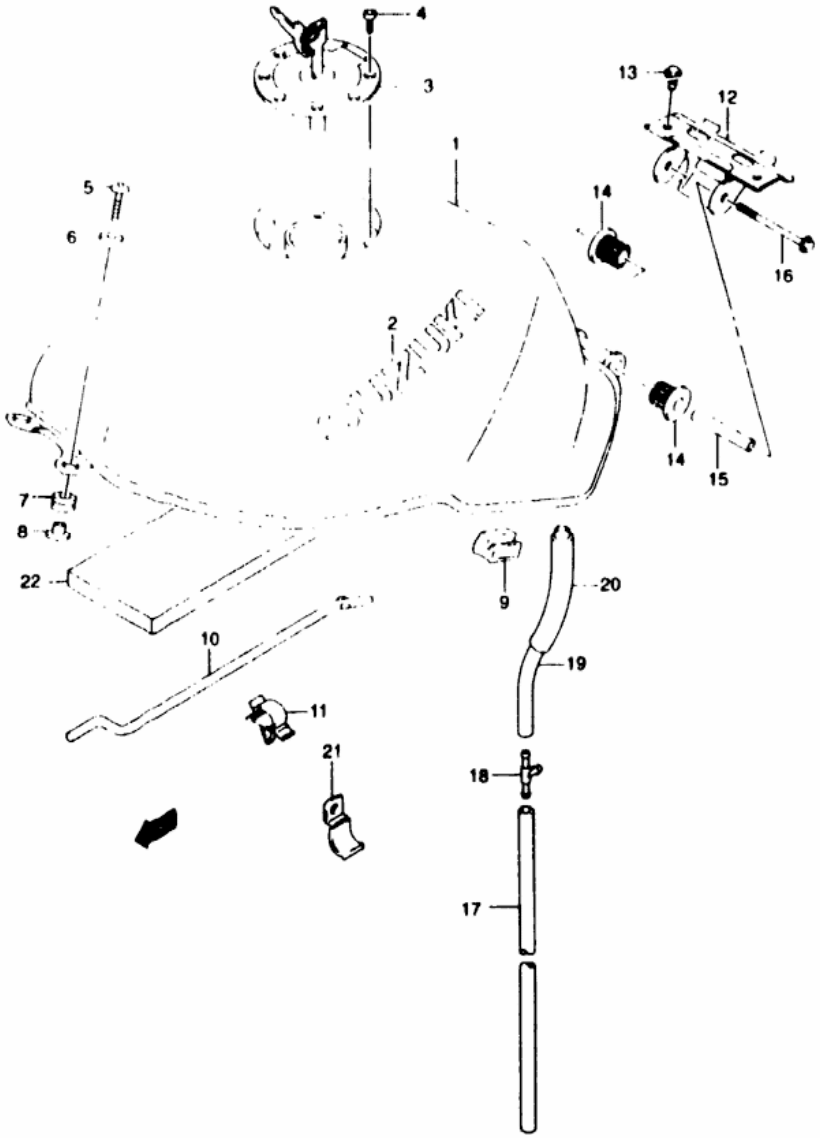

FIG 35 (G- 5) FUEL TANK (MODEL X)

REF.NO.	PART NO.	DESCRIPTION	Q'TY	REMARKS
1-1	44100-19F00-Y7E	TANK ASSY. FUEL (BLUE)	1	
1-2	44100-19F00-Y7M	TANK ASSY FUEL (RED)	1	
1-3	44100-19F20-Y7E	TANK ASSY FUEL (BLUE)	1	E33
1-4	44100-19F20-Y7M	TANK ASSY FUEL (RED)	1	E33
2-1	68111-42E00-2ZG	EMBLEM FUEL TANK (GRAY)	2	FOR Y7M
2-2	68111-42E00-1ZY	EMBLEM FUEL TANK (GRAY)	2	[illegible]
3-1	44200-33870	CAP SET FUEL TANK	1	
3-2	44200-33890	CAP SET FUEL TANK	1	E33
4	09106 05017	BOLT (L 20)	4	
5	09139 06[illegible]09	SCREW (5×[illegible]5)	2	
6	09[illegible]60-06054	WASHER ([illegible])	2	
7	[illegible] 19F00	CUSHION FRONT	2	
8	44512-19F00	CUSHION FRONT	2	
9	44559-19F00	CUSHION FUEL TANK SIDE	2	
10	44574-33E01	STAY FUEL TANK	1	
11	09403-05310	CLAMP	1	
12	44550-19F10	BRACKET FUEL TANK REAR	1	
13	01550-08163	BOLT	2	
14	44541-02F00	CUSHION, FUEL TANK REAR	2	
15	44561-19F00	SPACEER FUEL TANK REAR	1	
16	01550-08853	BOLT	1	
17	09352-70103-600	HOSE, NO 2 (L 600→480)	1	
18	09367-08004	JOINT, 3 WAY	1	
19	09352-70103-600	HOSE, NO 1 (L 600 →160)	1	
20	09351-14152-600	PROTECTOR (L 600→140)	1	
21	44339-19F00	CLAMP, DRAIN HOSE	1	
22	44194-19F00	SHIELD, TANK FRONT	1	

REFER TO FIG 35A(G-6) FOR MODEL Y

FIG.35A

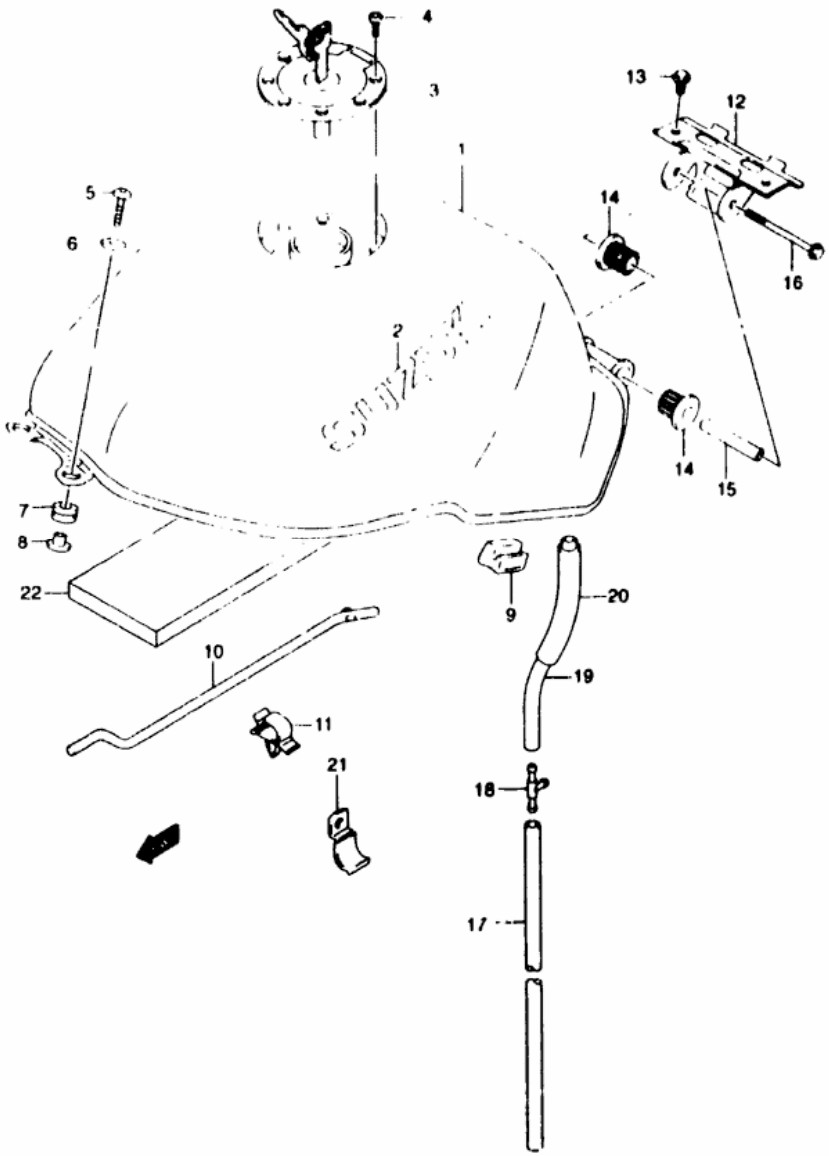

FIG 35A(G- 6) FUEL TANK (MODEL Y)

REF.NO.	PART NO.	DESCRIPTION	Q'TY	REMARKS
1-2	44100-19F40-Y7M	TANK ASSY. FUEL (RED)	1	
1-4	44100-19F40-YC2	TANK ASSY. FUEL (BLUE)	1	
1-6	44100-19F50-Y7M	TANK ASSY FUEL (RED)	1	E33
1-8	44100-19F50-YC2	TANK ASSY FUEL (BLUE)	1	E33
2-1	68111-12C00-1ZY	EMBLEM FUEL TANK (GRAY)	2	FOR Y7L YC2
2-2	68111-12C00-20G	EMBLEM FUEL TANK (GRAY)	2	FOR Y7M
3-1	44200-33870	CAP SET FUEL TANK	1	
3-2	44200-33890	CAP SET FUEL TANK	1	E33
4	09106-05017	BOLT (L 20)	4	
5	09139-[illegible]	SCREW (5X20)	2	
6	09160-06054	WASHER (6.5X22X1.0)	2	
7	44511-19F00	CUSHION FRONT	2	
8	44512-19F00	CUSHION FRONT	2	
9	44559-19F00	CUSHION FUEL TANK SIDE	2	
10	44574-33E01	STAY FUEL TANK	1	
11	09403-05310	CLAMP	1	
12	44550-19F10	BRACKET FUEL TANK REAR	1	
13	01550-08163	BOLT	2	
14	44541-02F00	CUSHION FUEL TANK REAR	2	
15	44561-19F00	SPACEER FUEL TANK REAR	1	
16	01550-08853	BOLT	1	
17	09352-70103-600	HOSE NO 2 (L 600 →480)	1	
18	09367-08004	JOINT 3 WAY	1	
19	09352-70103-600	HOSE NO 1 (L 600→160)	1	
20	09351-14152-600	PROTECTOR (L 600 →140)	1	
21	44339-19F00	CLAMP DRAIN HOSE	1	
22	44194-19F00	SHIELD TANK FRONT	1	

FIG.21

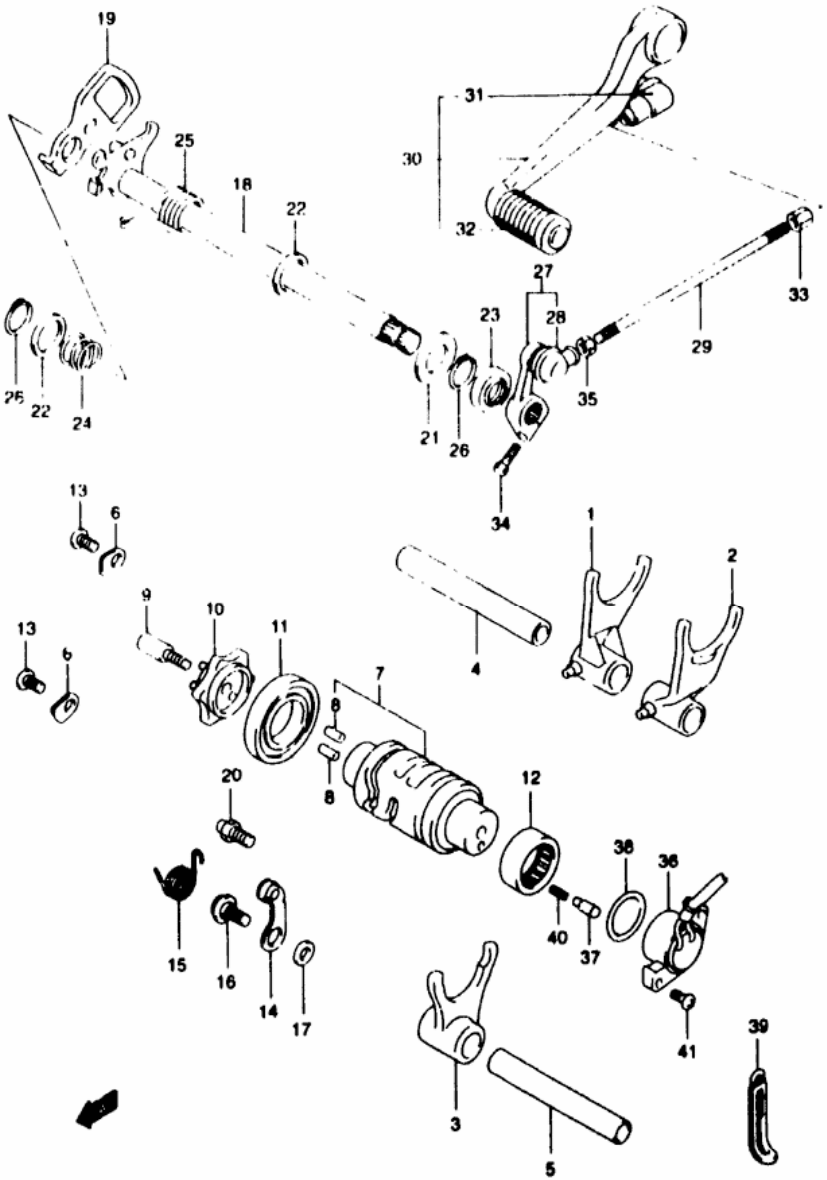

FIG 21 (D-12) GEAR SHIFTING

REF.NO.	PART NO.	DESCRIPTION	Q'TY	REMARKS
1	25211-42E10	FORK, GEAR SHIFT NO 1	1	
2	25221-42E10	FORK, GEAR SHIFT NO 2	2	
3	25231-42E10	FORK, GEAR SHIFT NO 3	1	
4	25411-26D01	SHAFT, GEAR SHIFT FORK NO 1	1	
5	25411-44B00	SHAFT, GEAR SHIFT FORK NO 2	1	
6	24741-21A00	RETAINER, SHIFT CAM BEARING	2	
7	25310-19F00	CAM, GEAR SHIFT	1	
8	04221-04089	KNOCK PIN	2	
9	25312-12C00	PIN, SHIFT CAM DRIVEN GEAR	1	
10	25381-19F00	PLATE, GEAR SHIFT CAM	1	
11	09262-25006	BEARING (25X47X8)	1	
12	09263-25018	BEARING (25X32X12)	1	
13	02112-06123	SCREW	2	
14	25350-24B00	STOPPER, GEAR SHIFT CAM	1	
15	25355-20F00	SPRING, STOPPER ARM	1	
16	09111-06041	BOLT (6X14.3)	1	
17	08211-06141	WASHER	1	
18	25510-19F00	SHAFT, GEAR SHIFT	1	
19	25512-13E11	PLATE, GEAR SHIFT CAM DRIVE	1	
20	25671-01000	STOPPER, RETURN SPRING	1	
21	09160-14016	WASHER (14X29X0.8)	1	
22	09181-14167	SHIM	2	
23	09283-14006	OIL SEAL (14X22X6)	1	
24	09440-17009	SPRING	1	
25	09444-20001	SPRING	1	
26	08331-31146	CIRCLIP	1	
27	25520-29B00	ARM, GEAR SHIFT LINK	1	
28	25526-47000	COVER, DUST	1	
29-1	25525-19F00	ROD, GEAR SHIFT (L 150)	1	SV650X
29-2	25525-05A10	ROD, GEAR SHIFT (L 175)	1	SV650SX E28
30	25600-33E00	LEVER ASSY, GEAR SHIFT	1	
31	25526-47000	COVER, DUST	1	
32	25652-20C00	RUBBER, GEAR SHIFT PEDAL	1	

FIG.21

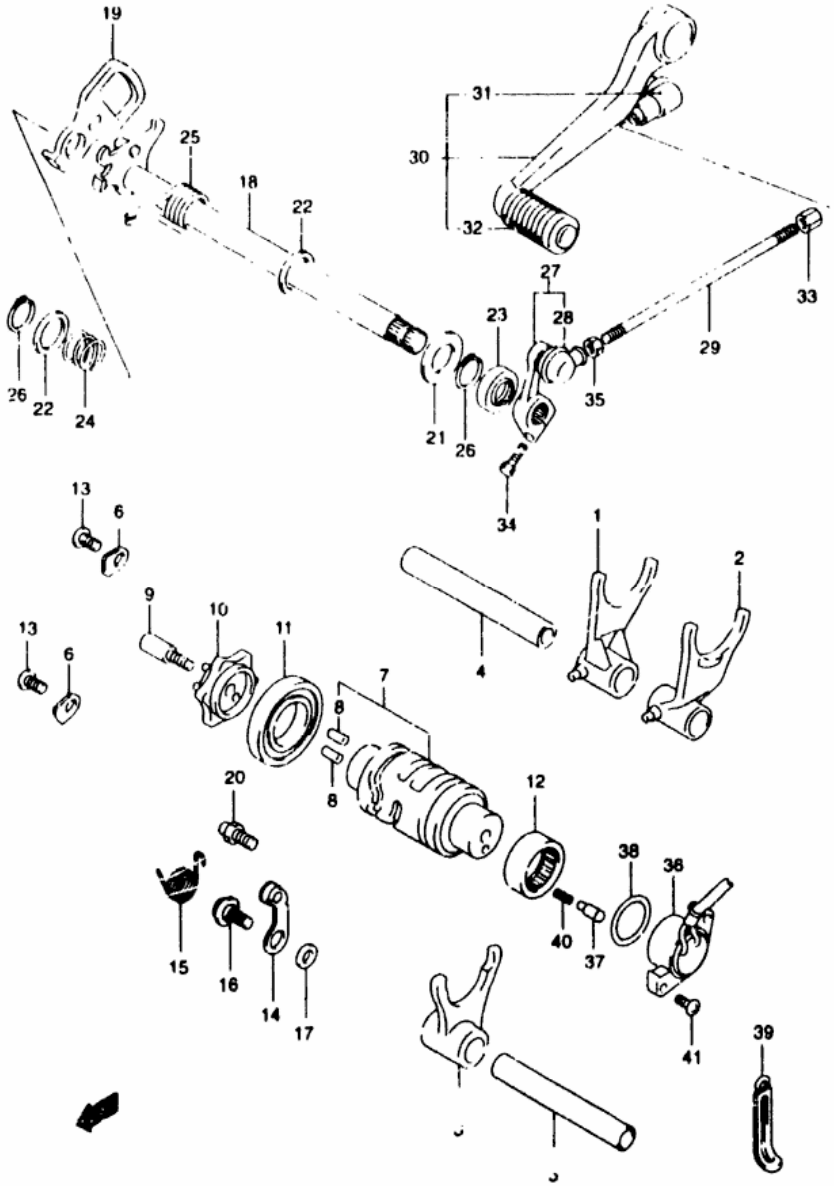

FIG 21 (D-13) GEAR SHIFTING

REF.NO.	PART NO.	DESCRIPTION	Q'TY	REMARKS
33	09140-0601[illegible]	NUT	1	
34	01500-06203	BOLT	1	
35	08310-00067	NUT	1	
36	37720-20F00	BASE ASSY. GEAR SHIFT TERMINAL	1	
37	09[illegible]-05011	CONTACT	2	
38	09[illegible]-26007	O RING (OD 2 4 ID 25 7)	1	
39	[illegible]404-08206	CLAMP (L 82[illegible]	1	
40	[illegible]440-04010	SPRING	2	
41	02112-05163	SCREW	2	

FIG.27

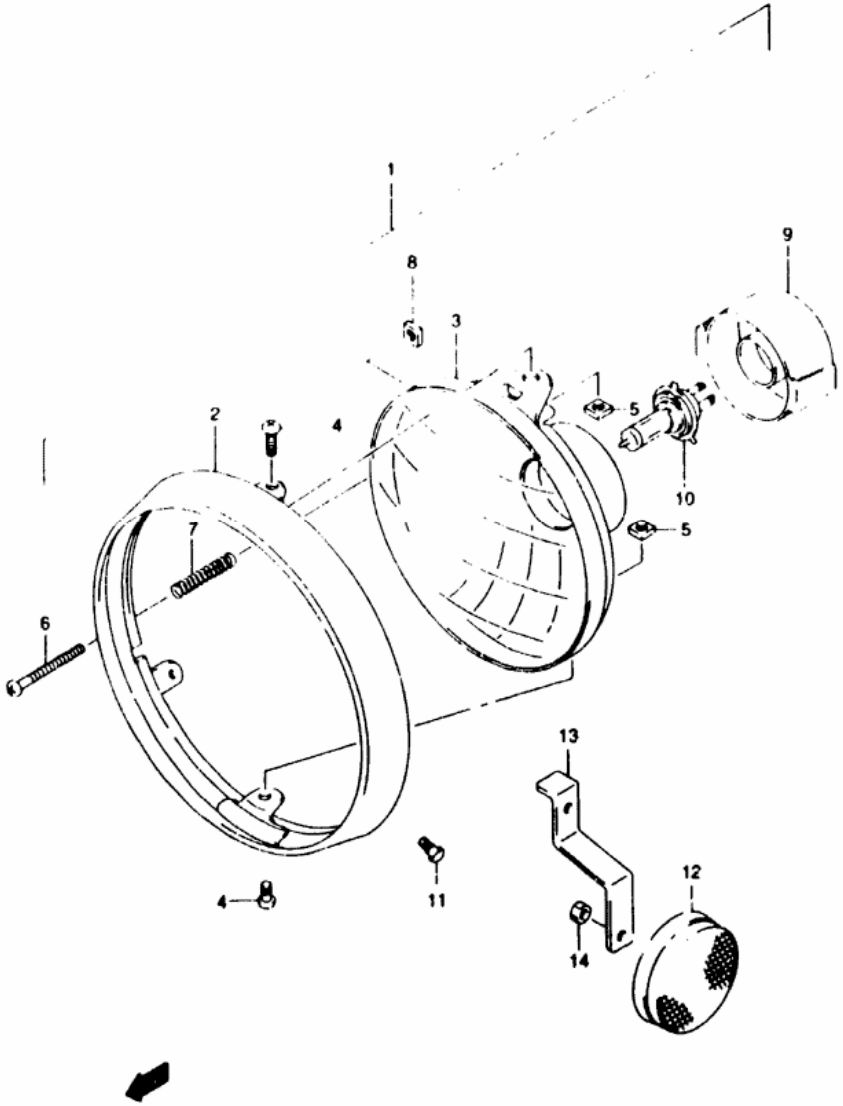

FIG 27 (F- 4) HEADLAMP (SV650X/Y)

REF.NO.	PART NO.	DESCRIPTION	Q'TY	REMARKS
1	35100-19F00-999	HEADLAMP ASSY	1	
2	35111-19F00	RIM	1	
3	35121-19F00	LAMP UNIT	1	
4	35181-19F00	SCREW (5X16)	2	
5	35135-45900	NUT	2	
6	35151-19F00	SCREW ADJUSTING	1	
	35154-13F00	SPRING	1	
8	35152-45600	NUT	1	
9	35174-19F00	COVER, SOCKET	1	
10	09471-12185	BULB (12V 60/55W)	1	
11	09139-05038	SCREW	2	
12	35950-14A00	REFLEX REFLECTOR ASSY	2	
13	35956-19F00	BRACKET FRONT SIDE RR	2	
14	08310-00053	NUT	2	

REFER TO FIG 27A(F-5) FOR SV650SX/SY E28

FIG.27A

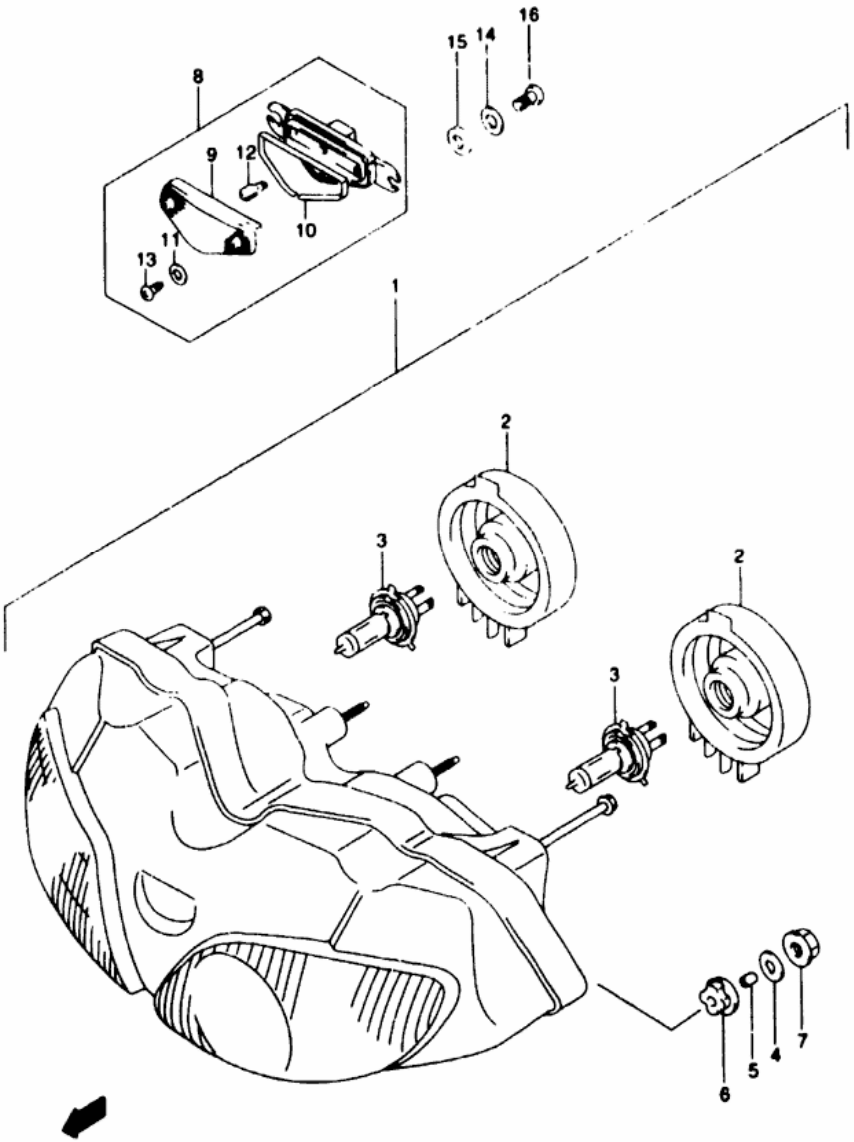

FIG 27A(F- 5) HEADLAMP (SV650SX/SY E28)

REF.NO.	PART NO.	DESCRIPTION	Q'TY	REMARKS
	35100-20F30-999	HEADLAMP ASSY	1	
2	35125-02F00	COVER, SOCKET	2	
3	09471-12102	BULB (12V,44W/45W)	2	
4	09160-06088	WASHER (6.5X20X1.6)	4	
5	09180-06267	SPACER (6.5X9X12.5)	4	
6	09320-09010	CUSHION	4	
7	08316-10063	NUT	4	
8	36110-20F00	LAMP ASSY FRONT POSITION	1	
9	36112-05F00	LENS	1	
10	36113-20F00	GASKET	1	
11-1	36117-08F00	WASHER	2	MODEL X
11-2	36128-37B00	WASHER	2	MODEL Y
12	09471-12081	BULB (12V,5W)	1	
13	03211-04123	SCREW	2	
14	09161-05045	WASHER (5.5X18X1.0)	2	
15	09320-08001	CUSHION	2	
16	03511-05103	SCREW	2	

AIR CLEANER..... C-08
BATTERY..... E-04
CAM CHAIN..... C-04
CAM SHAFT / VALVE.. C-03
CRANKCASE COVER.... B-07
CRANKCASE..... B-05
CRANKSHAFT..... B-08
CYLINDER..... B-06
FRONT BRAKE HOSE... I-07
FRONT CALIPER..... I-06
FRONT CYLINDER HEAD B-02
FRONT FENDER..... G-11
GEAR SHIFTING..... D-12
HANDLE BAR..... H-02
HANDLE LEVER..... H-04
HANDLE SWITCH..... E-11
OPTIONAL..... J-07
RADIATOR HOSE..... D-07
RADIATOR..... D-06
REAR CALIPER..... J-05
REAR WHEEL..... J-04
SEAT TAIL COVER.... H-11
SEAT..... H-10
SPEEDOMETER..... F-02
TRANSMISSION..... D-10
TURNSIGNAL LAMP.... F-06
WARNING LABEL..... H-09
WATER PUMP..... D-04

FIG.39

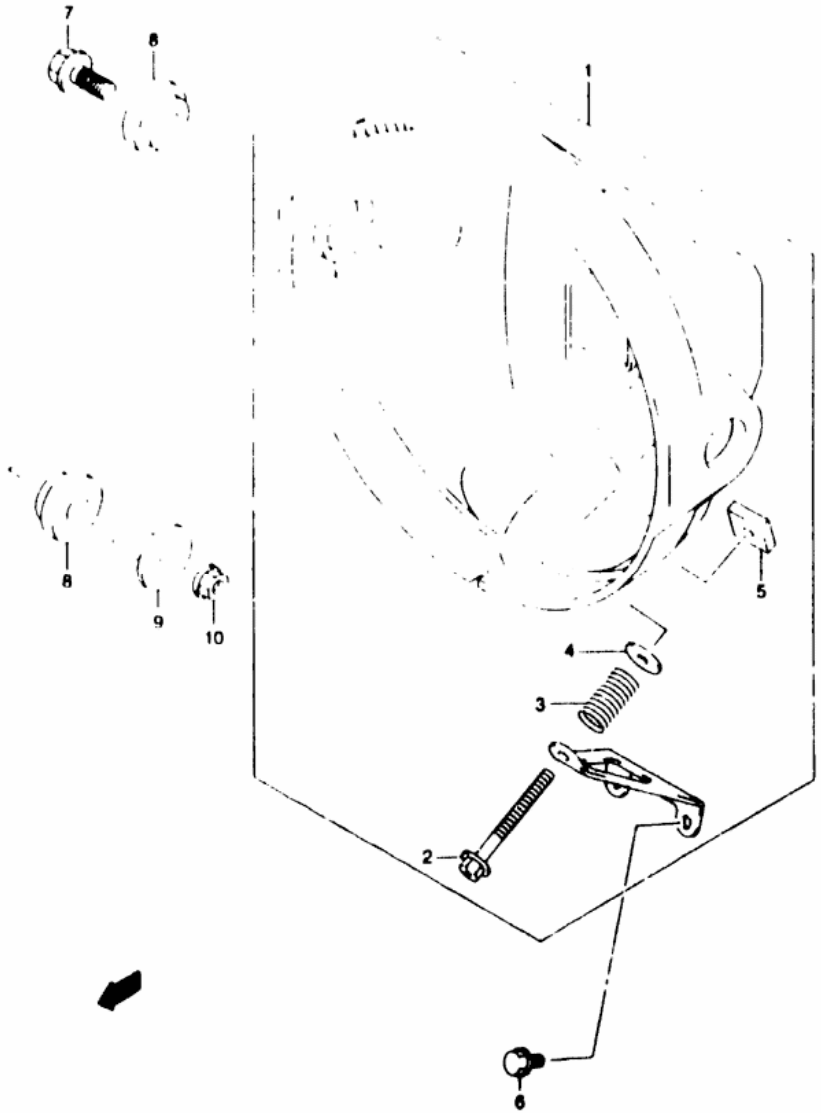

FIG 39 (G-10) HEADLAMP HOUSING (SV650X/Y)

REF.NO.	PART NO.	DESCRIPTION	Q'TY	REMARKS
1	51800-19F00	HOUSING ASSY HEADLAMP	1	
2	51858-25D00	BOLT HEADLAMP ADJUSTER	1	
3	51837-25D00	SPRING HEADLAMP ADJUSTER	1	
4	08322-01053	WASHER	1	
5	51825-25D00	NUT HEADLAMP ADJUSTER	1	
6	01550-05123	BOLT	4	
7	01244-08357	BOLT	2	
8	09320-12065	CUSHION	4	
9	09180-08168	SPACER (8.6×12×20)	2	
10	08316-10083	NUT	2	

AIR CLEANER..... C-08
BATTERY..... E-04
CAM CHAIN..... C-04
CRANKCASE COVER.... B-07
CRANKCASE..... B-05
CRANKSHAFT..... B-08
FRONT BRAKE HOSE... I-07
FRONT CALIPER..... I-06
FRONT CYLINDER HEAD B-02
GEAR SHIFTING..... D-12
HANDLE BAR..... H-02
HANDLE LEVER..... H-04
OPTIONAL..... J-07
RADIATOR HOSE..... D-07
RADIATOR..... D-06
REAR WHEEL..... J-04
SEAT TAIL COVER.... H-11
SEAT..... H-10
TRANSMISSION..... D-10
TURNSIGNAL LAMP.... F-06
WARNING LABEL..... H-09

FIG.41

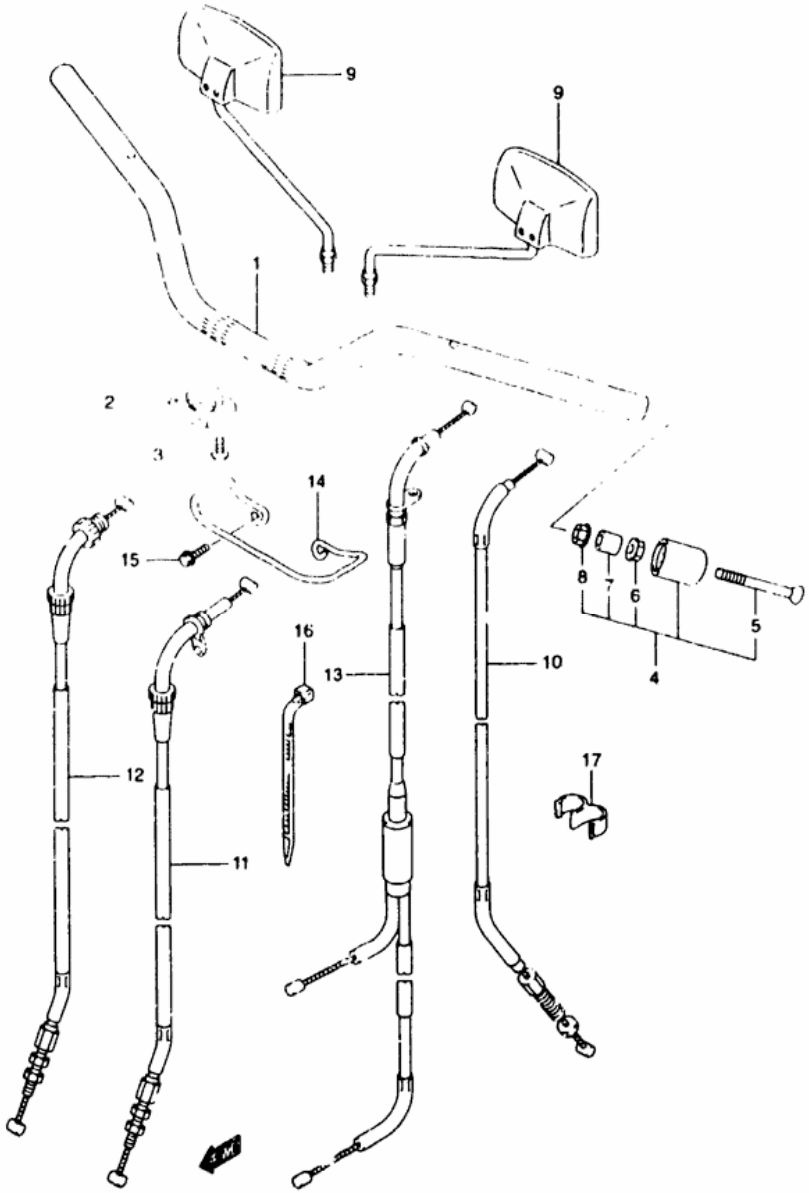

FIG 41 (H- 2) HANDLE BAR (SV650X/Y)

REF.NO.	PART NO.	DESCRIPTION	Q'TY	REMARKS
1	56111-19F20	HANDLE BAR	1	
2	56170-19F00	COVER, IGNITION SWITCH	1	
3	02142-04123	SCREW	2	
4	56200-32821	BALANCER SET, HANDLE BAR	2	
5	02122-06803	SCREW	2	
6	08316-10083	NUT	2	
7	56272-44500	EXPANDER HANDLE BALANCER	2	
8	09159-06024	NUT	2	
9	56500-09020	MIRROR ASSY, REAR VIEW	2	
10	58200-20F00	CABLE ASSY CLUTCH	1	
11	58300-20F20	CABLE ASSY, THROTTLE NO 1	1	
12	58300-20F30	CABLE ASSY THROTTLE NO 2	1	
13	58410-20F00	CABLE STARTER	1	
14	58621-19F00	GUIDE CABLE	1	
15	01550-06123	BOLT	2	
16	09407-14407	CLAMP	1	
17	09408-00033	CLIP	1	

REFER TO FIG 41A(H-3) FOR SV650SX/SY E28

AIR CLEANER..... C-08
BATTERY..... E-04
CRANKCASE COVER.... H-07
CRANKCASE..... B-L
FRONT BRAKE HOSE... I-07
FRONT CALIPER..... I-06
GEAR SHIFTING..... D-12
HANDLE BAR..... H-02
OPTIONAL..... J-07
RADIATOR HOSE..... D-07
REAR WHEEL..... J-04
SEAT TAIL COVER.... H-11
TRANSMISSION..... D-10
TURNSIGNAL LAMP.... F-06
WARNING LABEL..... H-09

FIG.41A

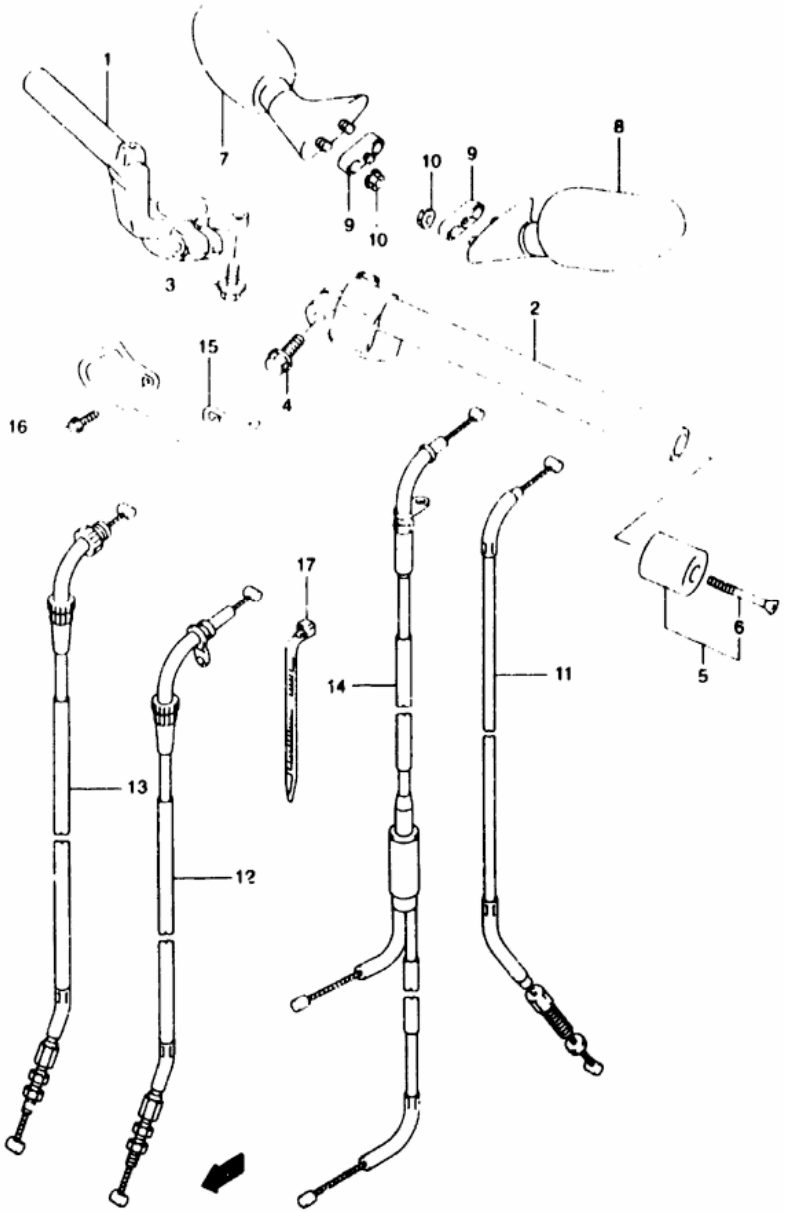

FIG. A(H- 3) HANDLE BAR (SV650SX/SY E28)

REF.NO.	PART NO.	DESCRIPTION	Q'TY	REMARKS
1	56111-19F00	HANDLE BAR, RH	1	
2	56151-19F00	HANDLE BAR, LH	1	
3	01550-06203	BOLT	2	
4	09103-08269	BOLT (8X30)	2	
5	56200-04821	BALANCER SET HANDLE BAR	2	
6	02122-06603	SCREW	2	
7	56500-19F00	MIRROR ASSY REAR VIEW RH	1	
8	56600-19F00	MIRROR ASSY REAR VIEW LH	1	
9	94576-19F00	CUSHION REAR VIEW MIRROR	2	
10	56619-17C00	NUT REAR VIEW MIRROR	4	
11	58200-19F00	CABLE ASSY CLUTCH	1	
12	58300-20F00	CABLE ASSY THROTTLE NO.1	1	
13	58300-20F10	CABLE ASSY THROTTLE NO.2	1	
14	58410-19F00	CABLE STARTER	1	
15	58621-19F00	GUIDE CABLE	1	
16	01550-06123	BOLT	2	
17	09407-14407	CLAMP	1	

FIG.42

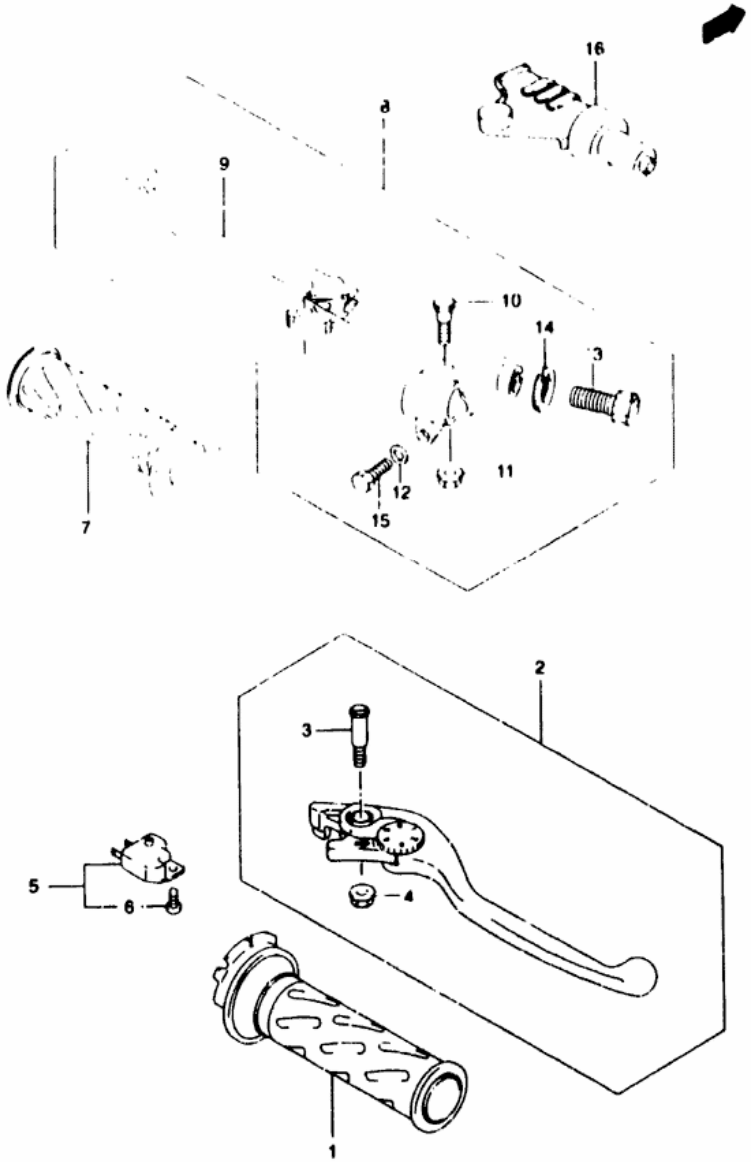

FIG 42 (H- 4) HANDLE LEVER

REF.NO.	PART NO.	DESCRIPTION	Q'TY	REMARKS
1	57110-46E01	GRIP, THROTTLE	1	
2	57300-33E01	LEVER ASSY BRAKE	1	
3	57431-17C00	BOLT KNOCKER	1	
4	08316-10063	NUT	1	
5	57460-17C00	SWITCH ASSY STOP	1	
6	57465-17C00	SCREW	1	
7	57211-22D01	GRIP LH	1	
8-1	57500-10D01	LEVER ASSY CLUTCH	1	SV650X/Y
8-2	57500-10D80	LEVER ASSY CLUTCH	1	SV650SX/SY E28
9	57620-27A31	LEVER	1	
10	57531-14A00	SCREW BRAKE LEVER PIVOT	1	
11	08319-21063	NUT	1	
12	08322-01063	WASHER	1	
13	57441-11010	ADJUSTER CABLE	1	
14	57442-11010	NUT CABLE ADJUSTER	1	
15	01500-06203	BOLT	1	
16	57061-45C00	COVER CLUTCH LEVER	1	

FIG.31

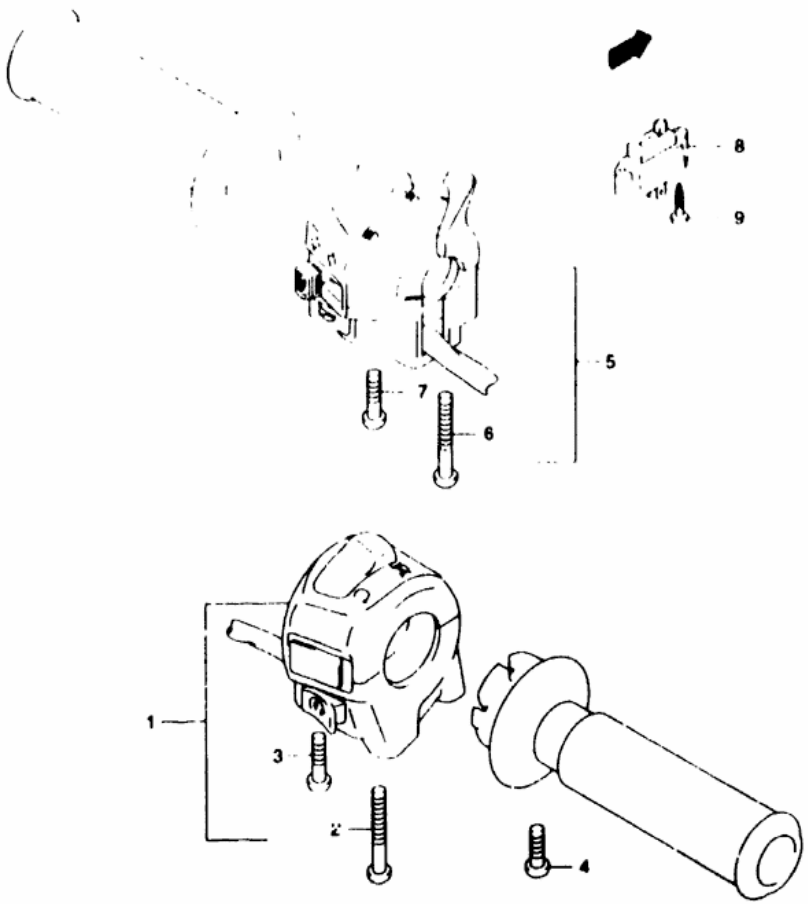

FIG 31 (F-11) HANDLE SWITCH (SV650X/Y)

REF.NO.	PART NO.	DESCRIPTION	Q'TY	REMARKS
1	37200-27E31	SWITCH ASSY HANDLE RH	1	
2	02112-05505	SCREW	1	
3	02112-05305	SCREW	1	
4	02112-05103	SCREW THROTTLE CABLE	1	
5	37400-23E30	SWITCH ASSY HANDLE LH	1	
6	02112-05455	SCREW	1	
7	09125-05066	SCREW (5x25)	1	
8	37560-38A00	SWITCH ASSY CLUTCH	1	
9	37564-26E00	SCREW	2	

REFER TO FIG 31A(F-12) FOR [illegible] E2R

FIG.31A

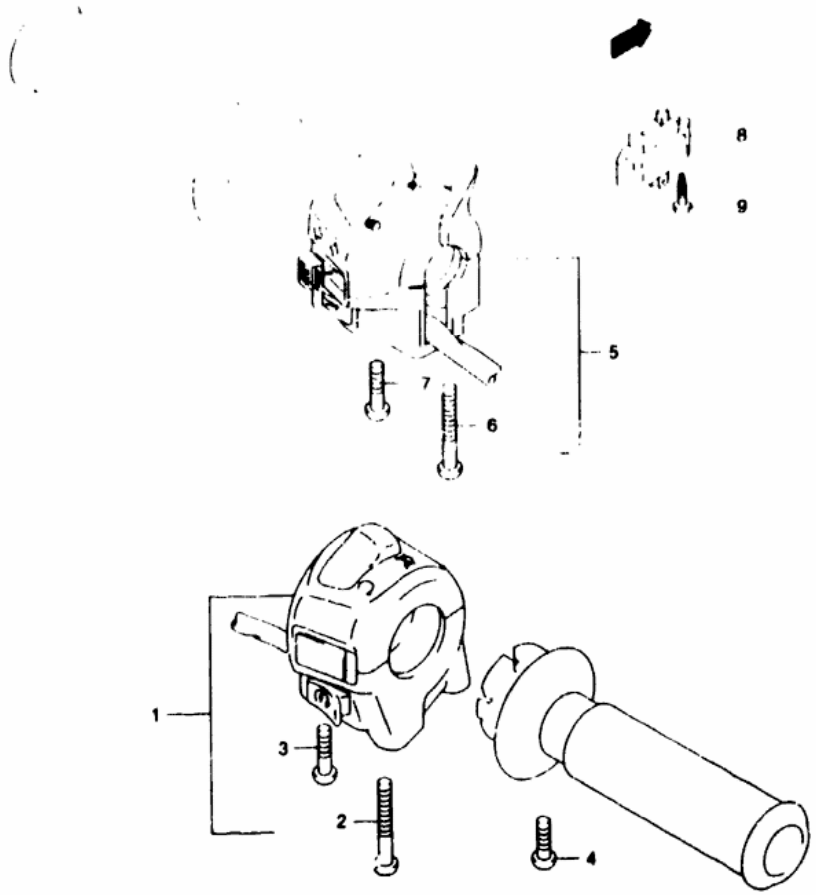

FIG 31A(F-12) HANDLE SWITCH (SV650SX/SY E28)

REF.NO.	PART NO.	DESCRIPTION	Q'TY	REMARKS
1	37200-33E31	SWITCH ASSY HANDLE RH	1	
2	02112-05505	SCREW	1	
3	02112-05305	SCREW	1	
4	02112-05103	SCREW THROTTLE CABLE	1	
5	37400-26E31	SWITCH ASSY HANDLE LH	1	
6	02112-05455	SCREW	1	
7	09125-0506S	SCREW (5x25)	1	
8	37560-38A00	SWITCH ASSY CLUTCH	1	
9	37564-[illegible]E00	SCREW	2	

FIG.23

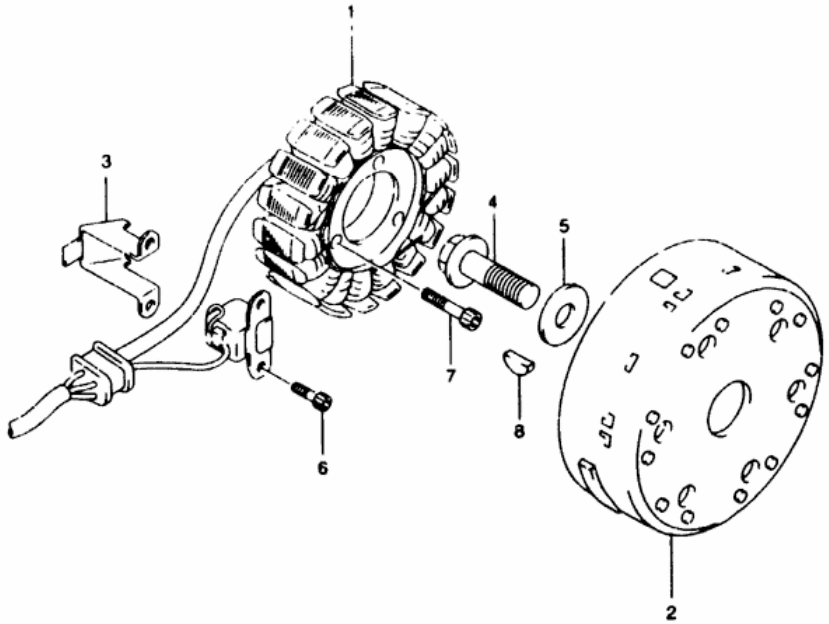

FIG 23 (E-3) MAGNETO

REF.NO.	PART NO.	DESCRIPTION	Q'TY	REMARKS
1	32101-19F00	STATOR ASSY	1	
2	32102-20F00	ROTOR ASSY	1	
3	32371-19F00	CLAMP MAGNETO LEAD	1	
4	09103-12004	BOLT (12X40)	1	
5	09160-12036	WASHER (12X30X3)	1	
6	07130-05123	BOLT	2	
7	07130-05303	BOLT	3	
8	09420-04008	KEY	1	

AIR CLEANER..... C-08
BATTERY..... E-04
CAM CHAIN..... C-04
CAM SHAFT / VALVE.. C-03
CRANKCASE COVER.... B-07
CRANKCASE..... B-05
CRANKSHAFT..... B-08
CYLINDER..... B-04
FRONT BRAKE HOSE... I-07
FRONT CALIPER..... I-06
FRONT CYLINDER HEAD B-02
FRONT FENDER..... G-11
GEAR SHIFTING..... D-12
HANDLE BAR..... H-02
HANDLE LEVER..... H-04
HANDLE SWITCH..... G-11
OPTIONAL..... J-07
RADIATOR HOSE..... D-07
RADIATOR..... D-06
REAR CALIPER..... J-05
REAR WHEEL..... J-04
SEAT TAIL COVER.... H-11
SEAT..... H-10
SPEEDOMETER..... F-02
TRANSMISSION..... D-10
TURNSIGNAL LAMP.... F-06
WARNING LABEL..... H-09
WATER PUMP..... D-04

FIG.13

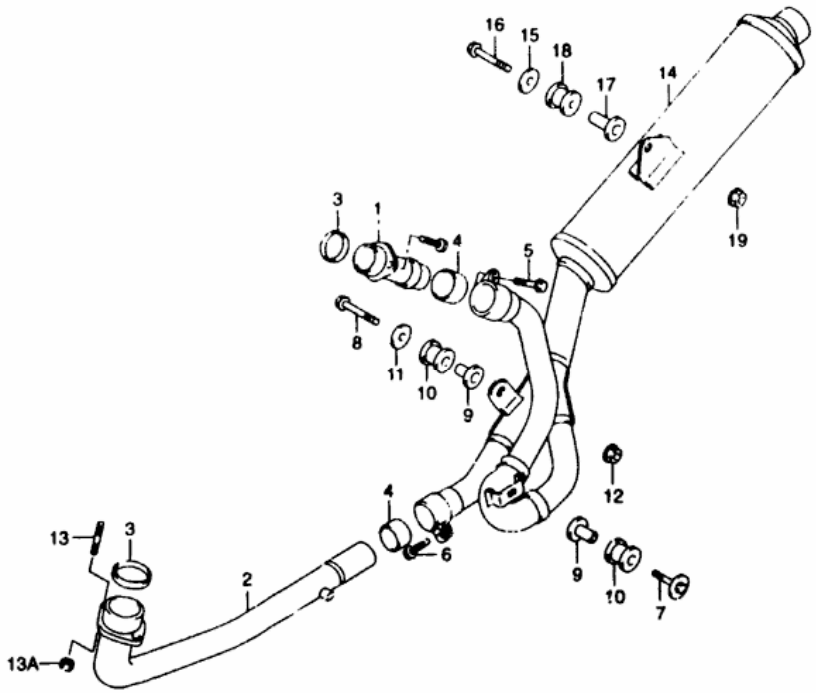

FIG 13 (D- 2) MUFFLER

REF.NO.	PART NO.	DESCRIPTION	Q'TY	REMARKS
1	14150-19F00	PIPE, EXHAUST REAR	1	
2	14160-19F10	PIPE, EXHAUST FRONT	1	
3	14181-22D01	GASKET, EXHAUST PIPE	2	
4	14771-32E00	CONNECTOR, MUFFLER	2	
5	07120-08403	BOLT	1	
6	07120-08403	BOLT	1	
7	09118-08068	BOLT (8X40)	1	
8	01550-08457	BOLT	1	
9	09180-08152	SPACER (8 6X12X24 2)	2	
10	09320-12048	CUSHION	2	
11	09160-08138	WASHER (8 5X30X2 3)	1	
12	08361-25088	NUT	1	
13	01421-08253	BOLT, STUD (8X25)	4	
13A	[illegible]-31087	NUT	4	
14	[illegible]-19F11-H01	MUFFLER	1	
15	09160-08140	WASHER (8 5X33X2 6)	1	
16	01550-08457	BOLT	1	
17	09180-08156	SPACER (8 6X12X25 5)	1	
18	09320-12049	CUSHION	1	
19	083[illegible]-[illegible]5088	NUT	1	

AIR CLEANER..... C-08
BATTERY..... E-04
CAM CHAIN..... C-04
CAM SHAFT / VALVE.. C-03
CARBURETOR FITTINGS C-07
CRANKCASE COVER.... B-07
CRANKCASE..... B-05
CRANKSHAFT..... B-08
CYLINDER..... B-04
ELECTRICAL..... E-05
FRONT BRAKE HOSE... I-07
FRONT CALIPER..... I-06
FRONT CYLINDER HEAD B-02
FRONT FENDER..... G-11
FRONT FORK DAMPER.. I-02
GEAR SHIFTING..... D-12
HANDLE BAR..... H-02
HANDLE LEVER..... H-04
HANDLE SWITCH..... F-11
HEADLAMP HOUSING... G-10
OPTIONAL..... J-07
RADIATOR HOSE..... D-07
RADIATOR..... D-06
REAR CALIPER..... J-05
REAR CUSHION LEVER. J-03
REAR WHEEL..... J-04
SEAT TAIL COVER.... H-11
SEAT..... H-10
SPEEDOMETER..... F-02
STAND..... G-03
TRANSMISSION..... D-10
TURNSIGNAL LAMP.... F-06
WARNING LABEL..... H-09
WATER PUMP..... D-04
WIRING HARNESS..... F-09

FIG.14

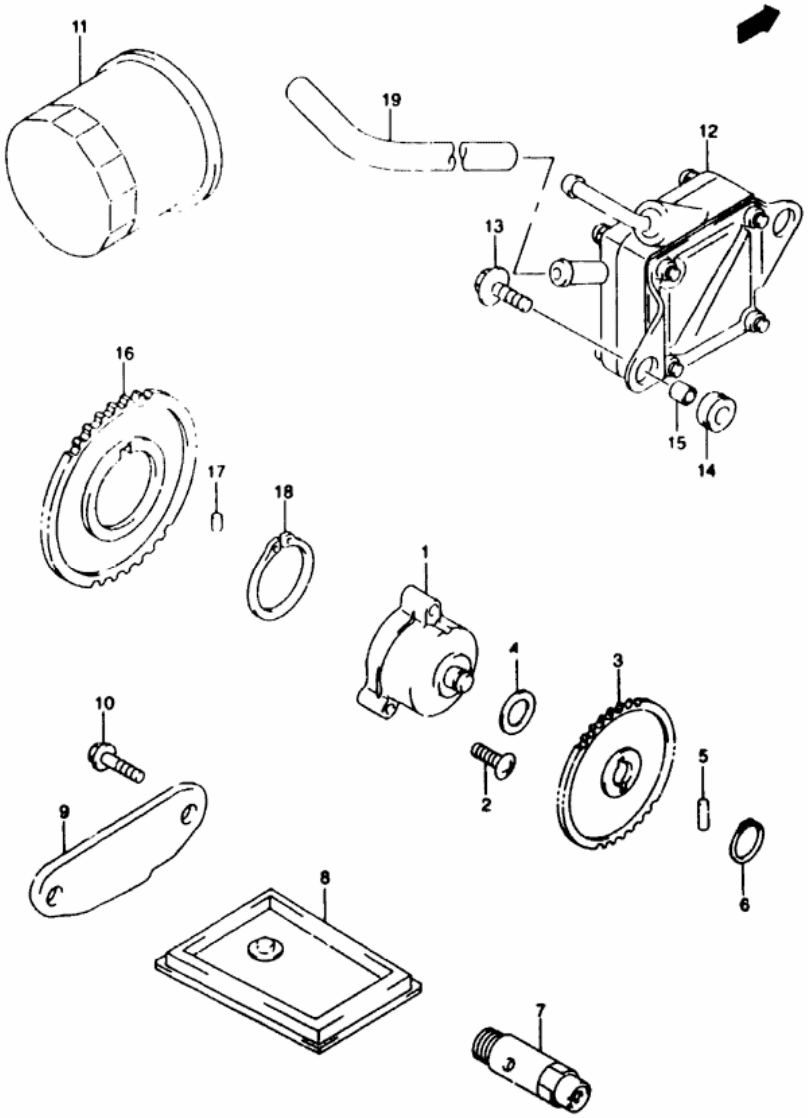

FIG.14 (D- 3) OIL PUMP / FUEL PUMP

REF.NO.	PART NO.	DESCRIPTION	Q'TY	REMARKS
1	16400-20F00	PUMP ASSY, ENGINE OIL	1	
2	02112-06253	SCREW	3	
3	16331-48E00	GEAR, OIL PUMP DRIVEN (NT 34)	1	
4	09181-10158	SHIM	1	
5	09261-04009	PIN (4X15 8)	1	
6	08331-31106	CIRCLIP	1	
7	16440-17C20	VALVE ASSY, OIL RELIEF	1	
8	16520-32E00	STRAINER, ENGINE OIL	1	
9	16523-48E00	CAP, OIL STRAINER	1	
10	01547-06123	BOLT	2	
11	16510-34E00	FILTER ASSY, ENGINE OIL	1	
12	15100-19F00	PUMP ASSY, FUEL	1	
13	09116-06115	BOLT, FUEL PUMP	2	
14	09320-09036	CUSHION, FUEL PUMP	2	
15	09180-06257	SPACER, FUEL PUMP	2	
16	16321-19F00	GEAR, ENGINE OIL PUMP DRIVE	1	
17	09261-06002	ROLLER (OD 6,L 6)	1	
18	08331-31383	CIRCLIP	1	
19	09355-50105-600	HOSE, VACUUM	1	L 600 +150

AIR CLEANER..... C-08
BATTERY..... E-04
CRANKCASE COVER.... B-07
CRANKCASE..... B-05
FRONT BRAKE HOSE... I-07
FRONT CALIPER..... I-06
GEAR SHIFTING..... D-12
HANDLE BAR..... H-02
OPTIONAL..... J-07
RADIATOR HOSE..... D-07
REAR WHEEL..... J-04
SEAT TAIL COVER.... H-11
TRANSMISSION..... D-10
TURNSIGNAL LAMP.. F-06

FIG.61

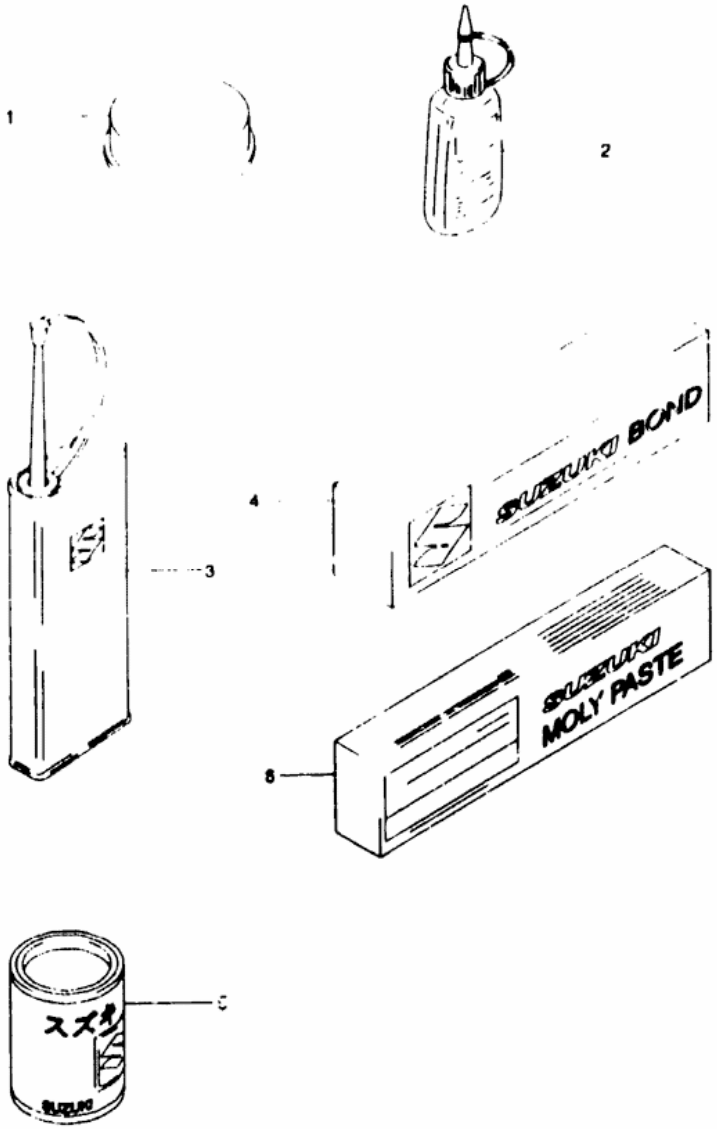

FIG 61 (J-7) OPTIONAL

REF.NO.	PART NO.	DESCRIPTION	Q'TY	REMARKS
1	99000-25110	SUZUKI PBC GREASE	1	80G
2-1	99104-32020	THREAD LOCK SUPER (1361A)	1	50G
2-2	99104-32030	THREAD LOCK SUPER (1363A)	1	50G
2-3	99000-32050	THREAD LOCK SUPER (1342)	1	50G
2-4	99000-32100	THREAD LOCK SUPER (1305)	1	50G
2-5	99000-32130	THREAD LOCK SUPER (1360)	1	50G
3	99000-32040	THREAD LOCK CEMENT	1	200G
4-1	99000-31140	SUZUKI BOND (1207B) BLACK	1	100G
4-2	99000-31110	SUZUKI BOND (1215)	1	100G
5	99000-25030	SUZUKI SUPER GREASE	1	100G
6	99000-25140	SUZUKI MOLY PASTE	1	[illegible]

FIG.16

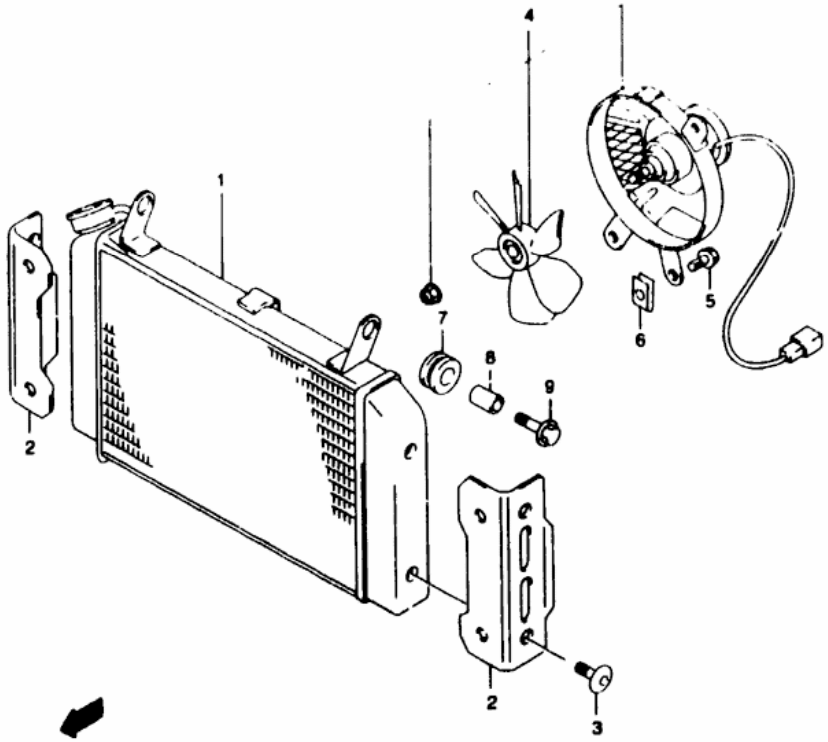

FIG 16 (D- 6) RADIATOR

REF.NO.	PART NO.	DESCRIPTION	Q'TY	REMARKS
1-1	17710-19F10	RADIATOR ASSY. WATER	1	SV650X/Y
1-2	17710-19F00	RADIATOR ASSY. WATER	1	SV650SX/SY E28
2	17761-19F00	COVER, RADIATOR	2	SV650X/Y
3	09139-06027	SCREW (6X12)	4	SV650X/Y
4	17800-19F10	FAN ASSY. RADIATOR	1	
5	01550-06103	BOLT	3	
6	09148-06015	NUT	3	
7	09320-10042	CUSHION	3	
8	09180-06290	SPACER (6.5X10X12)	3	
9	09118-06097	BOLT (6X25)	3	

AIR CLEANER..... C-08
BATTERY..... E-04
CRANKCASE COVER.... B-07
CRANKCASE..... B-05
FRONT BRAKE HOSE... I-07
FRONT CALIPER..... I-06
GEAR SHIFTING..... D-12
HANDLE BAR..... H-02
OPTIONAL..... J-07
RADIATOR HOSE..... D-07
REAR WHEEL..... J-04
SEAT TAIL COVER.... H-11
TRANSMISSION..... D-10
TURNSIGNAL LAMP.... F-06

FIG.17

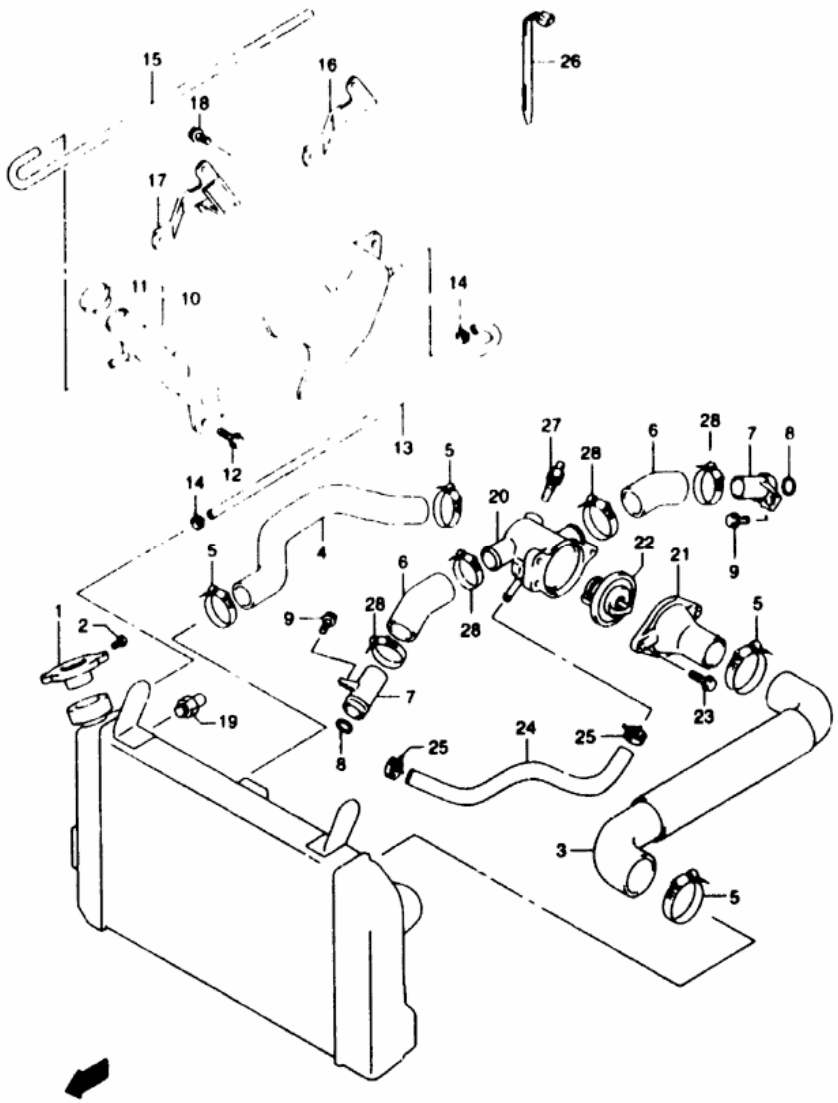

FIG 17 (D- 7) RADIATOR HOSE

REF.NO.	PART NO.	DESCRIPTION	Q'TY	REMARKS
1-1	17730-19D10	CAP, RADIATOR 1 1	1	SV650X
1-2	17730-19D11	CAP, RADIATOR 1 1	1	SV650Y
1-3	17730-12C20	CAP, RADIATOR	1	SV650SX/SY E28
2	17733-03D10	SCREW, RADIATOR CAP	1	SV650X/Y
3	17851-19F00	HOSE, RADIATOR INLET	1	
4	17852-19F00	HOSE RADIATOR OUTLET	1	
5	09402-38511	CLAMP	4	
6	17853-19F00	HOSE CONNECTOR INLET	2	
7	17890-02F00	UNION CONNECTOR HOSE	2	
8	09280-18009	O RING	2	
9	07130-06123	BOLT	2	
10	17910-19F00	TANK ASSY RESERVOIR	1	
11	17932-12C00	CAP RESERVOIR TANK	1	
12	01550-06163	BOLT	2	
13	17981-19F00	HOSE RESERVOIR TANK INLET	1	
14	09401-08411	CLIP	2	
15	09359-50901-980	HOSE RESERVOIR TANK OVERFLOW (L 980)	1	
16	17920-19F10	BRACKET, RESERVOIR TANK	1	SV650X/Y
17	17920-19F00	BRACKET, RESERVOIR TANK	1	SV650SX/SY E28
18	01550-06123	BOLT	1	
19	17680-24A20	SWITCH, RADIATOR FAN	1	
20	17662-19F01	CONNECTOR, THERMOSTAT INLET	1	
21	17663-02FA0	CAP, THERMOSTAT CONNECTOR	1	
22	17670-50F00	THERMOSTAT, WATER (82C)	1	
23	01550-06163	BOLT	2	
24	17856-19F00	HOSE, CONNECTOR TO WATER PUMP	1	
25	09401-12409	CLAMP	2	
26	09407-14403	CLAMP (L 140)	1	
27	34850-44D20	SENSOR, WATER TEMPERATURE	1	
28	09402-28511	CLAMP	4	

AIR CLEANER..... C-08
BATTERY..... E-04
CRANKCASE COVER.... B-07
CRANKCASE..... B-05
FRONT BRAKE HOSE... I-07
FRONT CALIPER..... I-06
GEAR SHIFTING..... D-12
HANDLE BAR..... H-02
OPTIONAL..... J-07
RADIATOR HOSE..... D-07
REAR WHEEL..... J-04
SEAT TAIL COVER.... H-11
TRANSMISSION..... D-10
TURNSIGNAL LAMP.... F-06

FIG.59

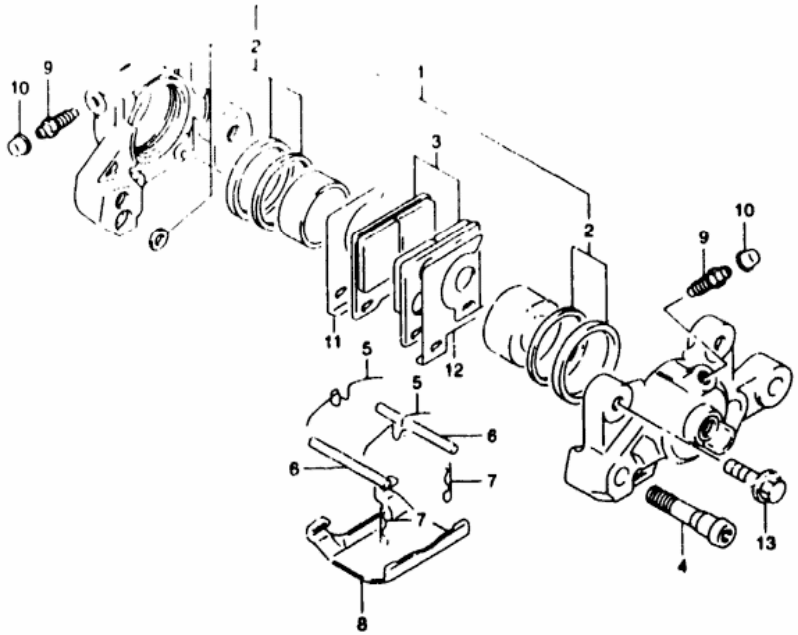

FIG.59 (J-5) REAR CALIPER

REF.NO.	PART NO	DESCRIPTION	Q'TY	REMARKS
	69100-05CD0	CALIPER ASSY. REAR	1	
1	69100-05850	PISTON SET	1	
2	69100-32820	SEAL SET PISTON	1	
3	69100-21820	PAD SET	1	
4	59145-05C50	BOLT	2	
5	59143-16700	SPRING	2	
6	69141-45000	PIN	2	
7	69142-45000	CLIP	2	
8	59151-16701	COVER	1	
9	59121-18410	BLEEDER	2	
10	55156-66310	CAP	2	
11	59371-20C00	SHIM INNER	1	
12	59381-20C00	SHIM OUTER	1	
13	01556-08303	BOLT	2	

FIG.57

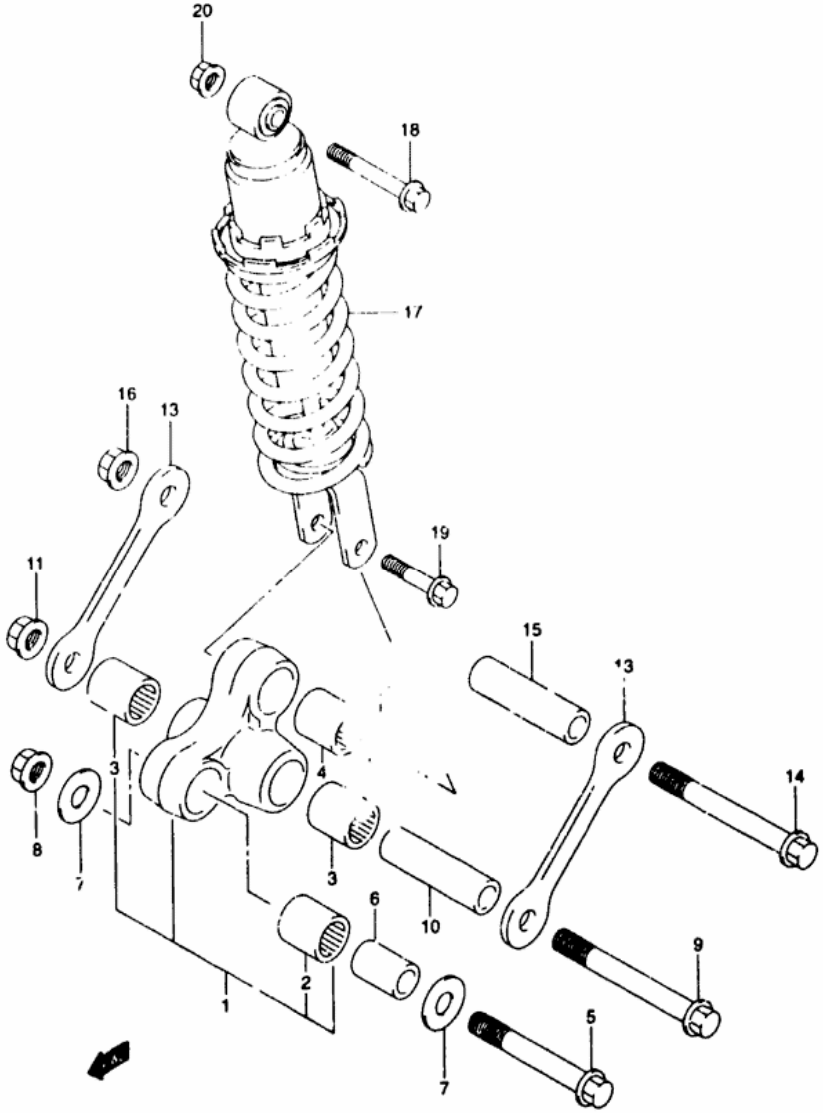

FIG.57 (J-3) REAR CUSHION LEVER

REF.NO.	PART NO.	DESCRIPTION	Q'TY	REMARKS
1	62600-19880	LEVER SET, REAR CUSHION	1	
2	09263-20073	BEARING, FRONT (20X27X30)	1	
3	09263-20071	BEARING, CENTER (20X27X23.5)	2	
4	09263-1703-	BEARING, REAR (17X24X26)	1	
5	62658-19F00	BOLT, FRONT (12X78)	1	
6	62684-12C00	SPACER, FRONT (12X20X32)	1	
7	09160-12037	WASHER	2	
8	08319-31128	NUT	1	
9	09103-12034	BOLT, CENTER (12X96)	1	
10	62626-19F00	SPACER, CENTER (12X20X68)	1	
11	08319-31128	NUT	1	
12	62684-40A10	SPACER, REAR (10X17X30)	1	
13	62641-20F00	ROD, REAR CUSHION	2	
14	09103-12034	BOLT, ROD (12X96)	1	
15	62626-19F00	SPACER, ROD (12X20X68)	1	
16	08319-31128	NUT	1	
17	62100-20F10-163	ABSORBER ASSY, REAR SHOCK (YELLOW)	1	SV650X/Y
18	09103-10033	BOLT, UPPER (10X70)	1	
19	09103-10126	BOLT, LOWER (10X48)	1	
20	08319-31107	NUT	1	

FIG.2

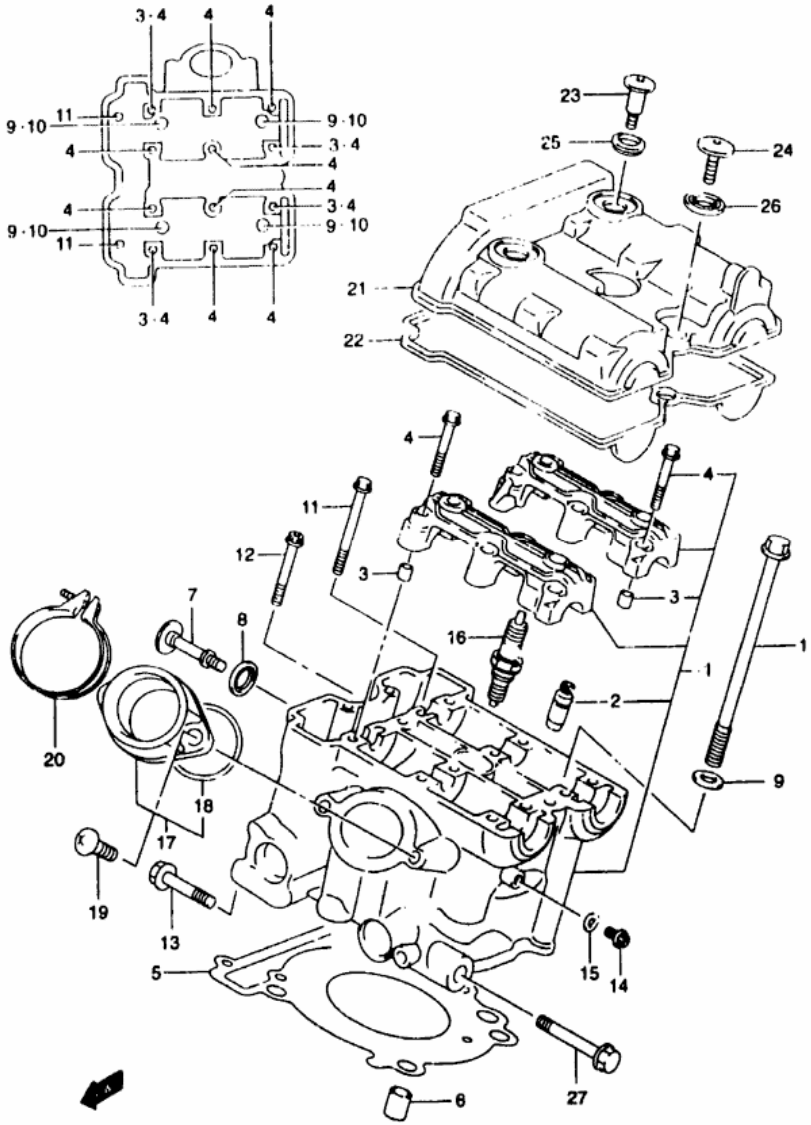

FIG.2 (B- 3) REAR CYLINDER HEAD

REF.NO.	PART NO.	DESCRIPTION	Q'TY	REMARKS
1-1	11103-20F00	HEAD ASSY, CYLINDER REAR	1	
1-2	11103-20F10	HEAD ASSY, CYLINDER REAR	1	E33
2	11115-18D72	GUIDE, VALVE	4	
3	09206-08001	PIN (6 2X8X11)	4	
4	09103-06026	BOLT (6X39)	12	
5	11141-20F00	GASKET, CYLINDER HEAD	1	
6	04211-13189	PIN	2	
7	11161-33E00	BOLT, CYLINDER HEAD SIDE FACE	1	
8	11191-13E00	WASHER, HEAD COVER	1	
9	09160-10082	WASHER (10 5X19X2 0)	4	
10	09103-10272	BOLT (10X160)	4	
11	09103-06103	BOLT (6X70)	2	
12	07120-06403	BOLT	1	
13	01550-10557	BOLT	1	
14	07120-06123	BOLT	1	
15	09166-06023	GASKET (5 8X13X1 2)	1	
16-1	09482-00456	SPARK PLUG (NGK,CR8E)	1	
16-2	09482-00457	SPARK PLUG (DENSO,U24ESR-N)	1	
16-3	09482-00458	SPARK PLUG (NGK,CR9E)	1	OPT
16-4	09482-00459	SPARK PLUG (DENSO,U27ESR-N)	1	OPT
16-5	09482-00460	SPARK PLUG (NGK,CR10E)	1	OPT
16-6	09482-00461	SPARK PLUG (DENSO,U31ESR-N)	1	OPT
17	13102-20F00	PIPE ASSY, INTAKE REAR	1	
18	09280-46006	O RING	1	
19	02122-06163	SCREW	2	
20	09402-56208	CLAMP	1	
21	11172-19F00	COVER, CYLINDER HEAD REAR	1	
22	11173-19F00	GASKET, CYLINDER HEAD COVER	1	
23	09106-07009	BOLT (7X17.5)	2	
24	09106-07010	BOLT (7X31)	1	
25	09161-11008	WASHER	2	
26	11192-13E00	CUSHION, HEAD COVER BOLT	1	
27	01550-10807	BOLT	1	

FIG.43

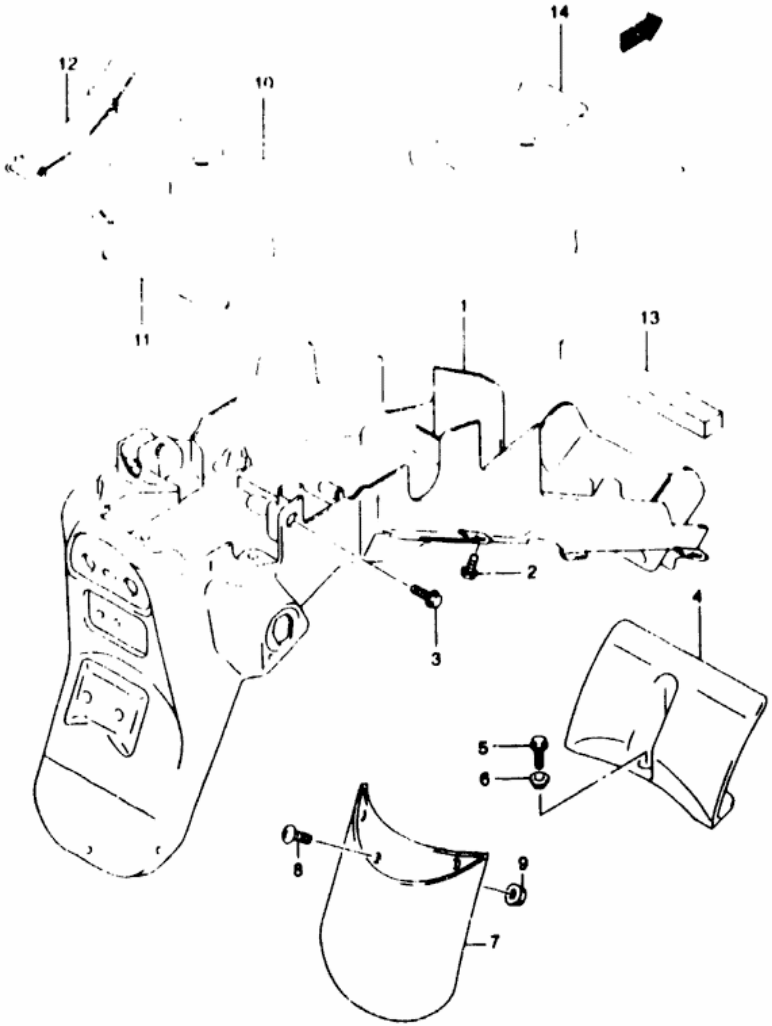

FIG 43 (H- 5) REAR FENDER

REF.NO.	PART NO.	DESCRIPTION	Q'TY	REMARKS
1	63111-19F30	FENDER, REAR	1	
2	09116-06165	BOLT	4	
3-1	09111-06066	BOLT	2	MODEL X
3-2	09113-06001	BOLT	2	MODEL Y
4	63421-19F00	MUD GUARD REAR FENDER FRONT	1	
5-1	01550-06163	BOLT	1	MODEL X
5-2	01162-06163	BOLT	1	MODEL Y
6	09169-06071	WASHER	1	
7	63[illegible]-19F10	EXTENSION REAR FENDER	1	
8	02142-06103	SCREW	3	
9	09146-06003	NUT	3	
10	09800-21008	TOOL ASSY	1	
11	09822-00005	CLAMP WRENCH	1	
12	47435-02F00	BAND TOOL	1	
13	47161-08F00	CUSHION	1	
14	94980-42A00	BAG MANUAL	1	

FIG.43

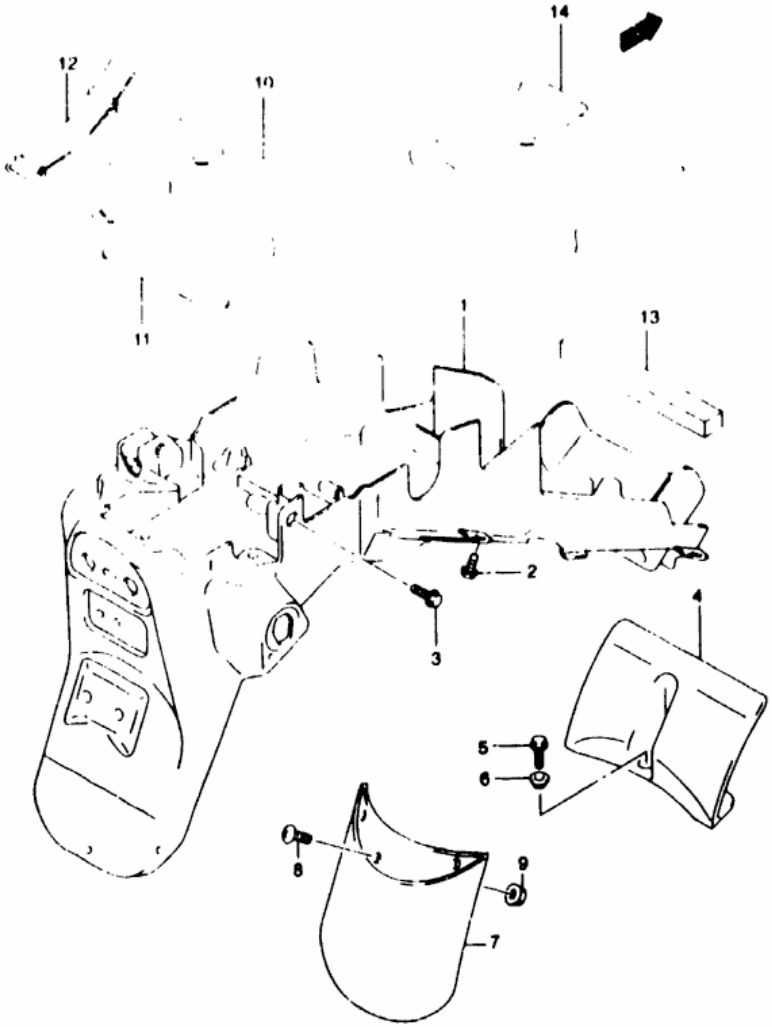

FIG 43 (H- 5) REAR FENDER

REF.NO.	PART NO.	DESCRIPTION	Q'TY	REMARKS
1	63111-19F30	FENDER, REAR	1	
2	09116-06165	BOLT	4	
3-1	09111-06066	BOLT	2	MODEL X
3-2	09113-06001	BOLT	2	MODEL Y
4	63421-19F00	MUD GUARD REAR FENDER FRONT	1	
5-1	01550-06163	BOLT	1	MODEL X
5-2	01162-06163	BOLT	1	MODEL Y
6	09169-06071	WASHER	1	
7	63[illegible]-19F10	EXTENSION REAR FENDER	1	
8	02142-06103	SCREW	3	
9	09146-06003	NUT	3	
10	09800-21008	TOOL ASSY	1	
11	09822-00005	CLAMP WRENCH	1	
12	47435-02F00	BAND TOOL	1	
13	47161-08F00	CUSHION	1	
14	94980-42A00	BAG MANUAL	1	

FIG.58

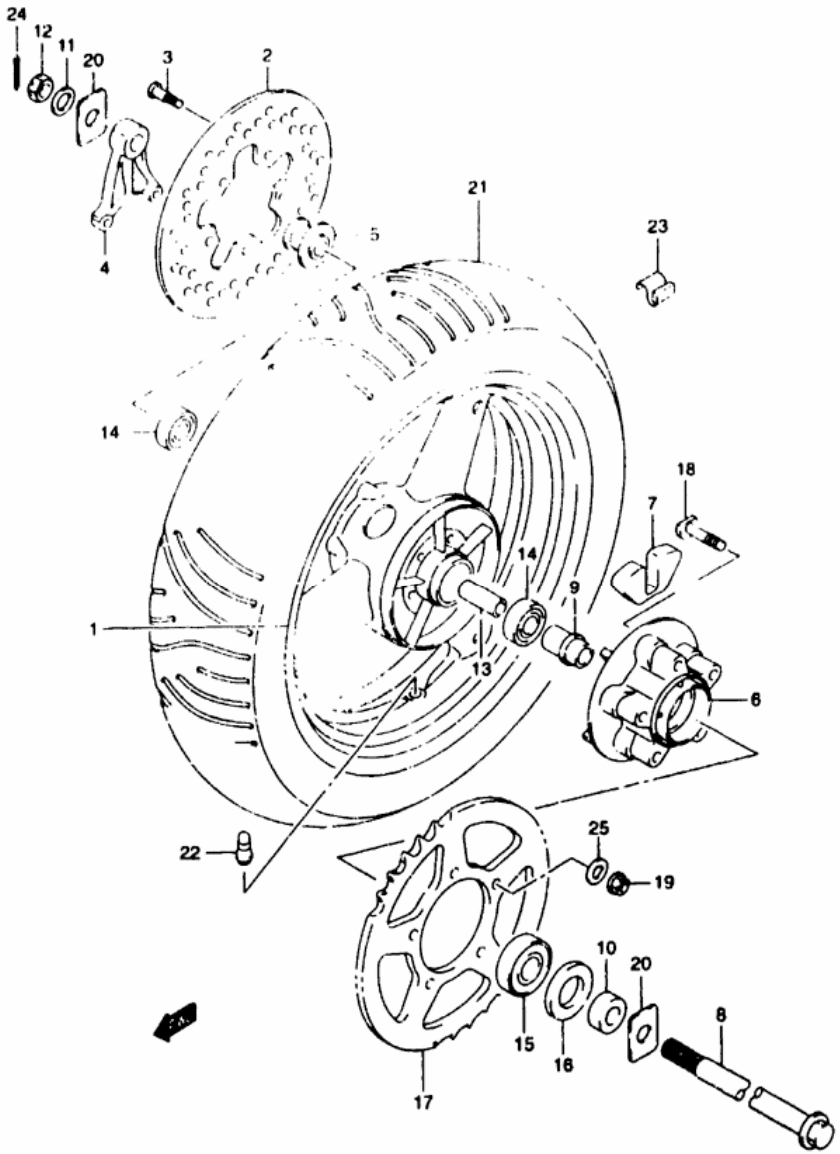

FIG 58 (J- 4) REAR WHEEL

REF.NO.	PART NO.	DESCRIPTION	Q'TY	REMARKS
1-1	64111-08F00-Y6G	WHEEL, REAR (17XMT4 50) (SILVER)	1	MODEL X
1-2	64111-08F00-12R	WHEEL, REAR (17XMT4 50) (SILVER)	1	MODEL Y
2	69211-21E00	DISC REAR BRAKE	1	
3	09106-08125	BOLT (8X33)	5	
4	69721-33D00	BRACKET REAR CALIPER	1	
5	64740-19C00	SPACER, REAR AXLE RH	1	
6	64611-19F00	DRUM SPROCKET MOUNTING	1	
7	64651-27A01	ABSORBER SHOCK REAR HUB	5	
8	64711-19F10	AXLE REAR	1	
9	64733-34C00	RETAINER, REAR SPROCKET DRUM	1	
10	64741-45D00	SPACER REAR AXLE LH	1	
11	09160-17050	WASHER	1	
12	09141-16007	NUT	1	
13	09180-17067	SPACER (17.5X25X88)	1	
14	08143-63037	BEARING	2	
15	09262-25073	BEARING (25X62X17)	1	
16	09285-35001	OIL SEAL (35X62X8)	1	
17	64511-32C00	SPROCKET, REAR (NT 45-525)	1	SV650X/Y
18	09119-10043	BOLT (10X47)	5	
19	08319-31107	NUT	5	
20	64712-33D00	WASHER, CHAIN ADJUSTER	2	
21	55110-20F00	TIRE, REAR, 160/60 ZR17(69W) (METZELER)	1	
22	43130-24A00	VALVE ASSY, WHEEL RIM (TR412)	1	
23-1	55411-00A00	BALANCER, WHEEL (10G)	0~3	
23-2	55412-00A01	BALANCER, WHEEL (20G)	0~3	
24	04111-40308	PIN, COTTER	1	
25	09160-10506	WASHER	5	

FIG.47

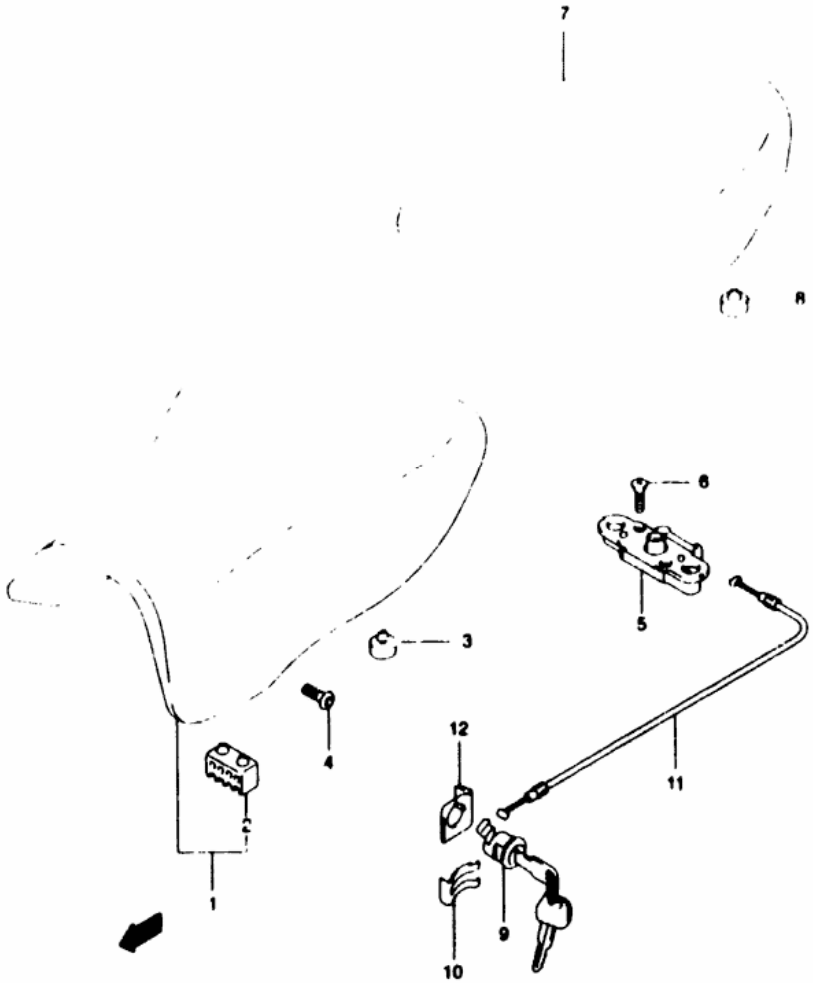

FIG 47 (H-10) SEAT

REF.NO.	PART NO.	DESCRIPTION	Q'TY	REMARKS
1	45100-19F50-W05	SEAT ASSY (BLACK)	1	
2	45149-31300	CUSHION	1	
3	09321-10002	CUSHION	2	
4	09106-06064	BOLT (6X18)	2	
5	45220-20A01	BRACKET SEAT SUPPORT REAR	1	
6	02122-06303	SCREW	2	
7	45300-19F50-W05	SEAT ASSY PILLION (BLACK)	1	
8	09321-10011	CUSHION	2	
9	95700-14810	LOCK SET SEAT	1	
10	45289-11F00	PLATE SEAT LOCK	1	
11	45280-38400	CABLE SEAT LOCK	1	
12	45288-14F00	GUIDE SEAT LOCK CABLE	1	

AIR CLEANER..... C-08
BATTERY..... E-04
CRANKCASE COVER.... B-07
CRANKCASE..... B-05
FRONT BRAKE HOSE... I-07
FRONT CALIPER..... I-06
GEAR SHIFTING..... D-12
HANDLE BAR..... H-02
OPTIONAL..... J-07
RADIATOR HOSE..... D-07
REAR WHEEL..... J-04
SEAT TAIL COVER.... H 11
TRANSMISSION..... D-10
TURNSIGNAL LAMP.... F-06

FIG.48

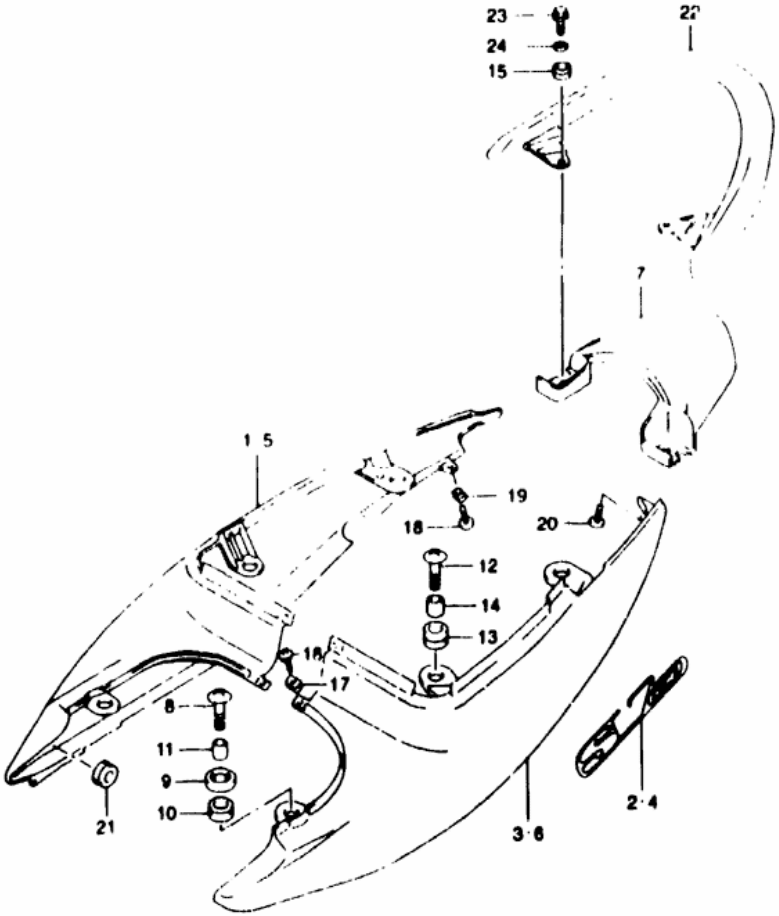

FIG 48 (H-11) SEAT TAIL COVER (MODEL X)

REF.NO.	PART NO.	DESCRIPTION	Q'TY	REMARKS
1-1	45501-20F00-Y7E	COVER, SEAT TAIL RH (BLUE)	1	SV650X
1-2	45501-20F00-Y7M	COVER, SEAT TAIL RH (RED)	1	SV650X
2-1	68165-20F00-N0J	EMBLEM TAIL COVER,SV650	1	FOR Y7E
2-2	68165-20F00-N0H	EMBLEM TAIL COVER SV650	1	FOR Y7M
3-1	45502-20F00-Y7E	COVER SEAT TAIL LH (BLUE)	1	SV650X
3-2	45502-20F00-Y7M	COVER SEAT TAIL LH (RED)	1	SV650X
4-1	68165-20F00-N0J	EMBLEM TAIL COVER SV650	1	FOR Y7E
4-2	68165-20F00-N0H	EMBLEM TAIL COVER SV650	1	FOR Y7M
5				NOT LISTED
6				NOT LISTED
7	45503-19F50-35W	COVER SEAT TAIL CENTER (GRAY)	1	
8	09136-06083	SCREW FRONT (6X30)	2	
[illegible]	47116-19F00	CUSHION FR UPPER (10X28X13)	2	
10	47115-19F00	CUSHION FR LOWER (10X22X15)	2	
[illegible]	09180-06294	SPACER (6.5X10X15.70)	2	
12	09136-06105	SCREW CENTER (6X20)	2	
[illegible]	09320-10045	CUSHION (10X28X19)	2	
14	09180-06266	SPACER (6.5X10X9.4)	2	
15	47115-05F00	CUSHION, REAR (15X28X12)	2	
16	03241-15123	SCREW	2	
17	09148-05038	NUT	2	
18	03241-15123	SCREW	2	
19	09148-05038	NUT	2	
20	03242-04103	SCREW	2	
21	09320-08018	CUSHION (8X26X7)	2	
22	46210-19F50-291	HANDLE, PILLION RIDER (BLACK)	1	
23	01810-08253	BOLT	2	
24	09160-08126	WASHER	2	

REFER TO FIG 49(H-12) FOR MODEL Y

FIG.49

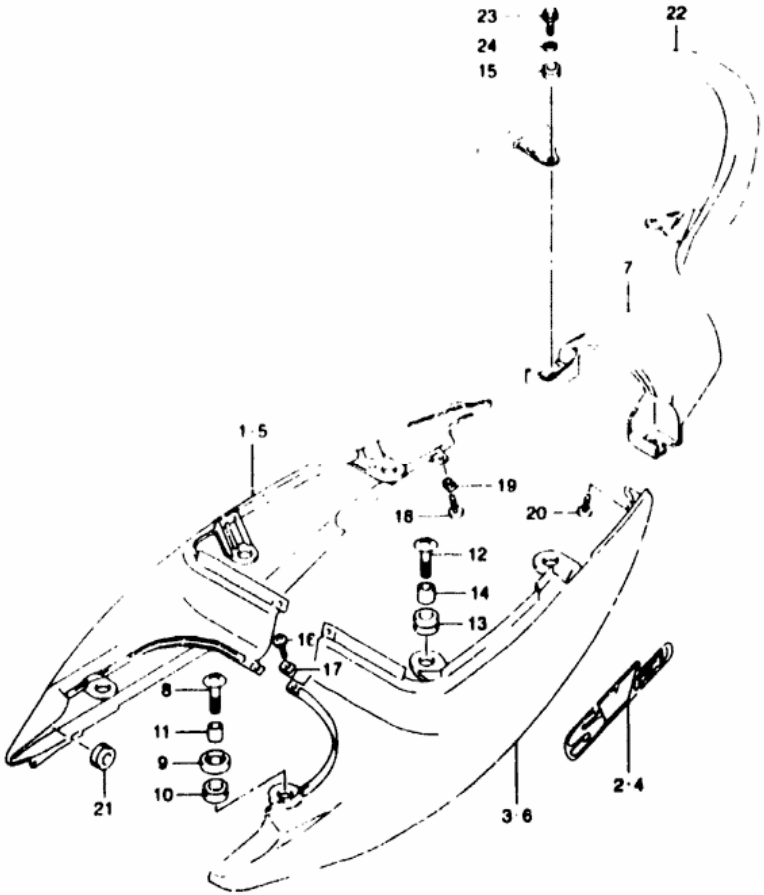

FIG 49 (H-12) SEAT TAIL COVER (MODEL Y)

REF.NO.	PART NO.	DESCRIPTION	Q'TY	REMARKS
1-1	45501-20F00-YC2	COVER, SEAT TAIL RH (BLUE)	1	SV650Y FOR YC2
1-2	45501-20F00-Z7X	COVER, SEAT TAIL RH (RED)	1	SV650Y FOR Y7M
2-1	68165-20F00-N9W	EMBLEM, TAIL COVER SV650	1	FOR YC2
2-3	68165-20F00-N9V	EMBLEM, TAIL COVER SV650	1	FOR Z7X
3-1	45502-20F00-YC2	COVER, SEAT TAIL LH (BLUE)	1	SV650Y FOR YC2
3-2	45502-20F00-Z7X	COVER, SEAT TAIL LH (RED)	1	SV650Y FOR Y7M
4-1	68165-20F00-N9W	EMBLEM, TAIL COVER SV650	1	FOR YC2
4-3	68165-20F00-N9V	EMBLEM, TAIL COVER SV650	1	FOR Z7X
5				NOT LISTED
6				NOT LISTED
7-1	45503-19F50-35W	COVER, SEAT TAIL CENTER (GRAY)	1	FOR YC2 Y7M Y9F
7-2	45503-19F50-YZL	COVER, SEAT TAIL CENTER (BLACK)	1	FOR YCL

AIR CLEANER..... C-08
BATTERY..... E-04
CRANKCASE COVER.... B-07
CRANKCASE..... B-05
FRONT BRAKE HOSE... I-07
FRONT CALIPER..... I-04
GEAR SHIFTING..... D-12
HANDLE BAR..... H-02
OPTIONAL..... J-07
RADIATOR HOSE..... D-07
REAR WHEEL..... J-04
SEAT TAIL COVER.... H-11
TRANSMISSION..... D-10
TURNSIGNAL LAMP.... F-06

FIG.26

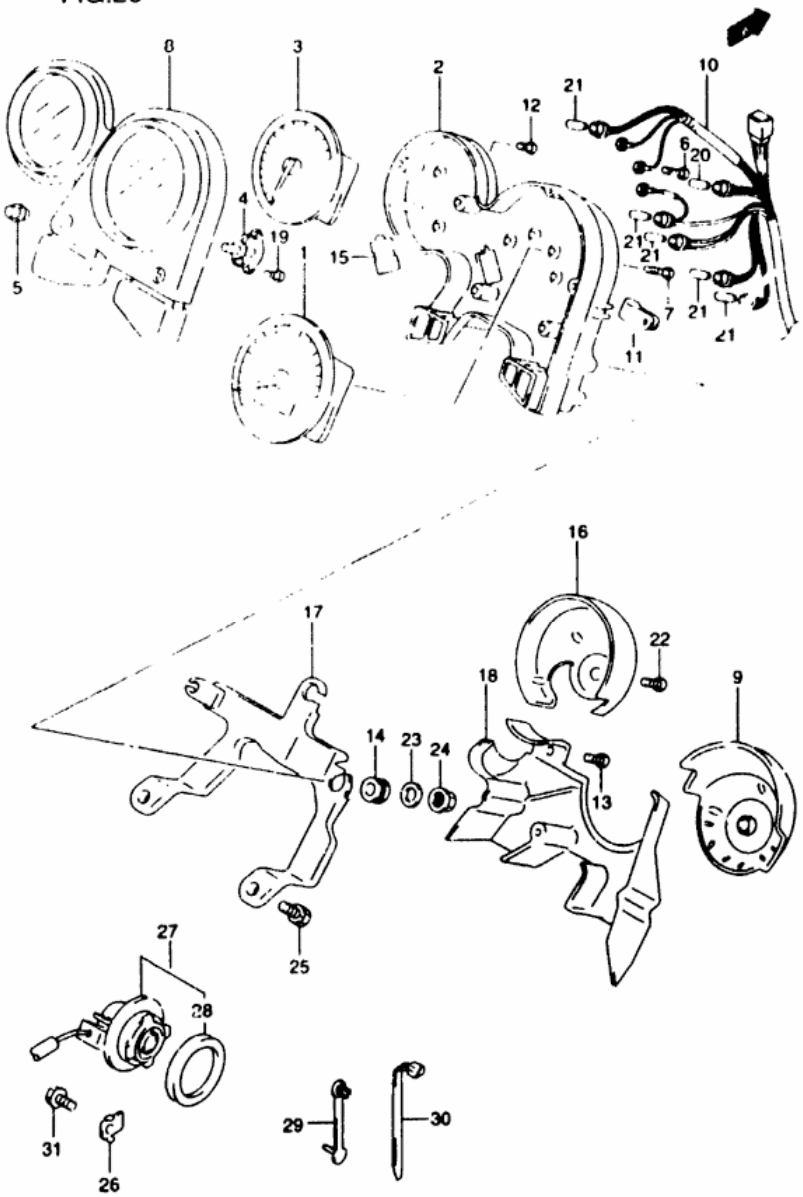

FIG 26 (F-2) SPEEDOMETER (SV650X/Y)

REF.NO.	PART NO.	DESCRIPTION	QTY	REMARKS
1	34110-20F10	SPEEDOMETER (MILE)	1	
2	34111-19F20	LOWER CASE	1	
3	34210-20F00	TACHOMETER	1	
4	34123-33E00	ATTACHMENT, SWITCH	1	
5	34124-33E00	SWITCH GUM	1	
6	34147-19F20	SCREW PAN HEAD (3X18)	3	
7	34149-19F20	SCREW PAN HEAD (3X20)	4	
8	34150-19F20	UPPER CASE	1	
9	34152-19F20	ORNAMENT SPEEDOMETER	1	
10	34173-19F20	CORD ASSY	1	
11	34176-19F20	CLAMP	1	
12	34183-09F00	SCREW (3X12)	3	
13	34183-19F20	SCREW HEAD TAPPING (4X16)	4	
14	34189-19F20	DAMPER	3	
15	34198-19F20	GROMMET	1	
16	34211-19F20	ORNAMENT TACHOMETER	1	
17	34950-19F20	BRACKET	1	
18	36383-19F20	COVER	1	
19	09132-03005	SCREW (3X10)	2	
20	09471-12077	BULB (12V 1.7W T10)	1	
21	09471-12108	BULB (12V 1.7W T6.5)	5	
22	03541-04163	SCREW	2	
23	09160-06056	WASHER (6.5X18X1)	3	
24	08310-00067	NUT	3	
25	01550-08163	BOLT	2	
26	34938-14F00	GUIDE, SENSOR LEAD	2	
27	34990-21E00	SENSOR, SPEED	1	
28	286-44001	SEAL, SENSOR OIL	1	
29	09407-03401	CLAMP	1	
30	09407-14407	CLAMP (L 145)	3	
31	01550-06123	BOLT	2	

REFER TO FIG.26A(F-3) FOR SV650SX/SY E28

31 SV650 Y E3/E33

AIR CLEANER..... C-08
BATTERY..... E-04
CAM CHAIN..... C-04
CAM SHAFT / VALVE.. C-03
CRANKCASE COVER.... B-07
CRANKCASE..... B-05
CRANKSHAFT..... B-08
CYLINDER..... B-04
FRONT BRAKE HOSE... I-07
FRONT CALIPER..... I-06
FRONT CYLINDER HEAD B-02
FRONT FENDER..... G-11
GEAR SHIFTING..... D-12
HANDLE BAR..... H-02
HANDLE LEVER..... H-04
HANDLE SWITCH..... E-11
OPTIONAL..... J-07
RADIATOR HOSE..... D-07
RADIATOR..... D-06
REAR CALIPER..... J-05
REAR WHEEL..... J-04
SEAT TAIL COVER.... H-11
SEAT..... H-10
SPEEDOMETER..... F-02
TRANSMISSION..... D-10
TURNSIGNAL LAMP.... F-06
WARNING LABEL..... H-09
WATER PUMP..... D-04

FIG.26A

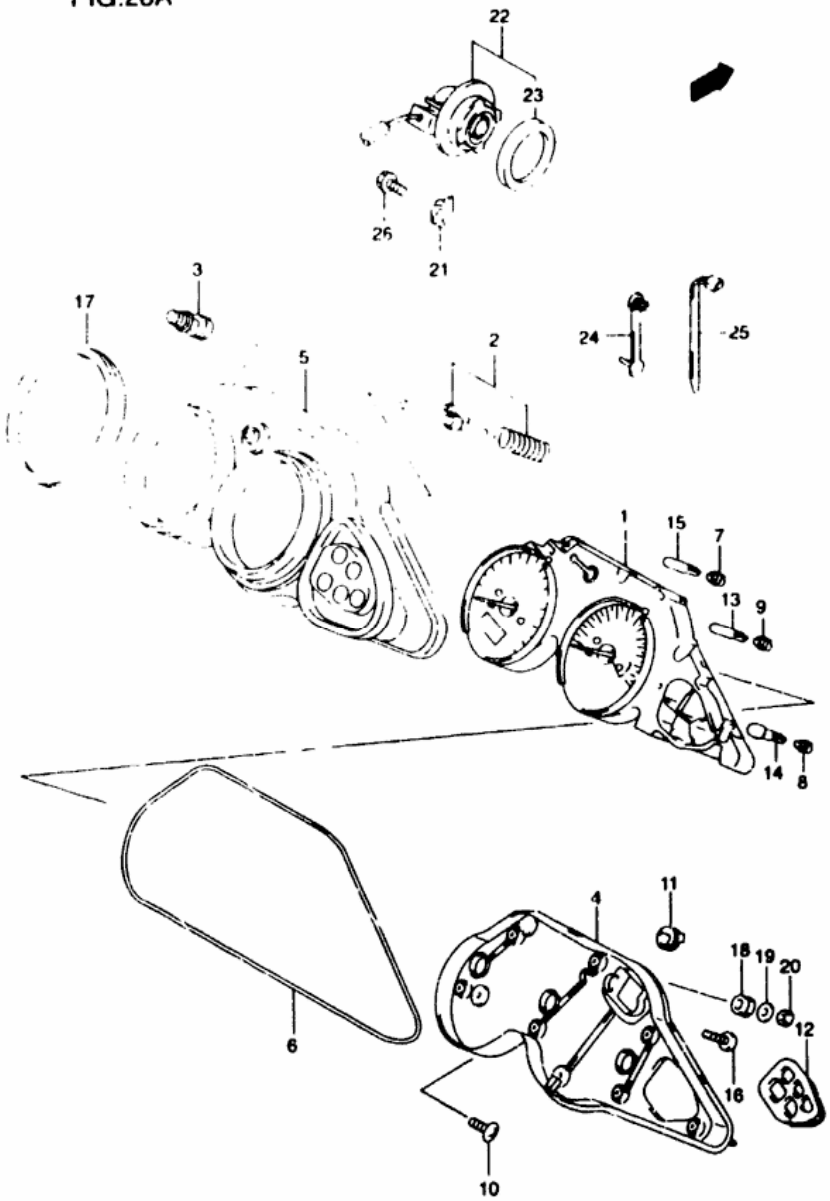

FIG 26A(F-3) SPEEDOMETER (SV650SX/SY E28)

REF.NO.	PART NO.	DESCRIPTION	Q'TY	REMARKS
1-1	34119-20F30	SPEEDOMETER	1	MODEL X
1-2	34119-20F31	SPEEDOMETER	1	MODEL Y
2	34123-02F00	LEVER	1	
3	34124-02F00	SWITCH GUM	1	
4	34130-02F00	CASE ASSY	1	
5	34150-19F00	VISOR	1	
6	34153-02F00	GASKET	1	
7	34172-71E70	SOCKET	3	
8	34173-19C00	SOCKET	3	
9	34173-19D70	SOCKET	2	
10	34183-33DC0	SCREW SPEEDOMETER (4x14)	2	
11	34198-02F00	BLIND CAP	3	
12	34198-02F10	BLIND	1	
13	09471-12085	BULB (14 / 3W)	2	
14	09471-12100	BULB (12 / 1.7W)	1	
15	09471-12189	BULB (14 / 0.84W)	3	
16	03211-04207	SCREW	6	
17	34188-02F00	CUSHION	2	
18	34996-43410	CUSHION	4	
19	09160-05037	WASHER (5.5x19x1.20)	4	
20	08310-00053	NUT	4	
21	34938-14F00	GUIDE SENSOR LEAD	1	
22	34990-21E00	SENSOR SPEED	1	
23	09286-44001	SEAL, SENSOR	1	
24	09407-03401	CLAMP	1	
25	09407-14407	CLAMP (L 145)	3	
26	01550-06123	BOLT	2	

AIR CLEANER..... C-08
BATTERY..... E-04
CAM CHAIN..... C-04
CAM SHAFT / VALVE.. C-03
CRANKCASE COVER.... B-07
CRANKCASE..... B-05
CRANKSHAFT..... B-08
CYLINDER..... B-06
FRONT BRAKE HOSE... I-07
FRONT CALIPER..... I-06
FRONT CYLINDER HEAD B-02
FRONT FENDER..... G-11
GEAR SHIFTING..... D-12
HANDLE BAR..... H-02
HANDLE LEVER..... H-04
HANDLE SWITCH..... E-11
OPTIONAL..... J-07
RADIATOR HOSE..... D-07
RADIATOR..... D-06
REAR CALIPER..... J-05
REAR WHEEL..... J-04
SEAT TAIL COVER.... H-11
SEAT..... H-10
SPEEDOMETER..... F-02
TRANSMISSION..... D-10
TURNSIGNAL LAMP.... F-06
WARNING LABEL..... H-09
WATER PUMP..... D-04

FIG.33

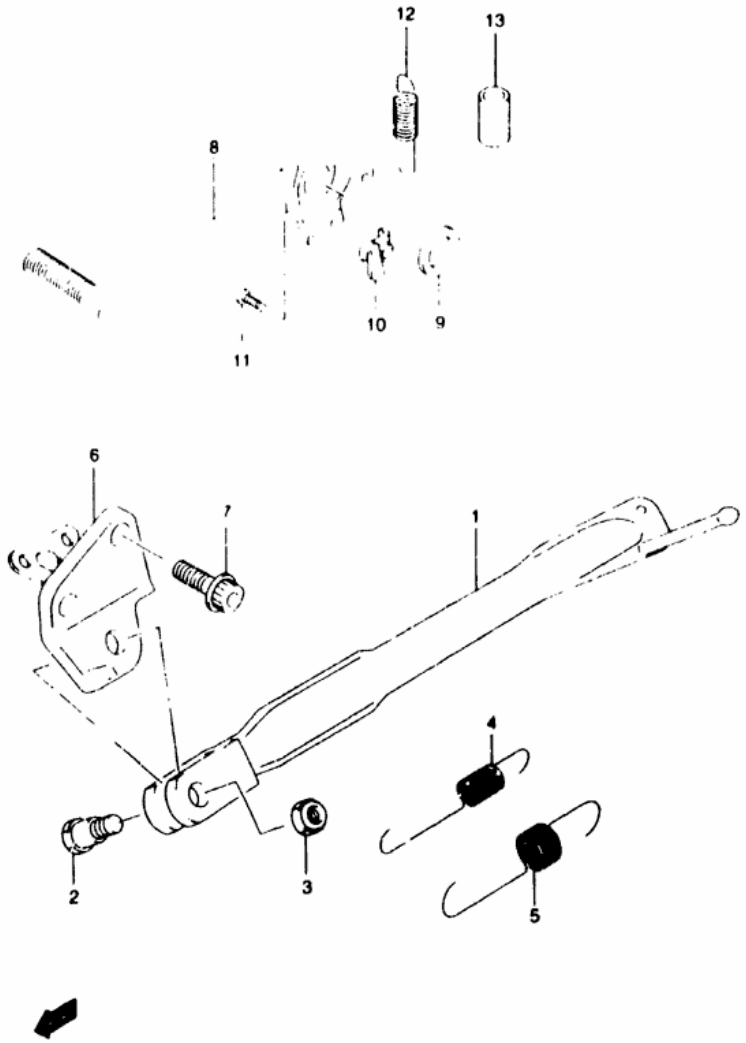

FIG 33 (G- 3) STAN.

REF.NO.	PART NO.	DESCRIPTION	Q'TY	REMARKS
1	42310-19F00	STAND, PROP	1	
2	09111-10027	BOLT	1	
3	08319-21103	NUT	1	
4	09443-14006	SPRING, INNER	1	
5	09443-19012	SPRING, OUTER	1	
6	42330-19F01	BRACKET, PROP STAND	1	
7	07120-10303	BOLT	2	
8	43111-33E00	PEDAL, BRAKE	1	
9	09160-18022	WASHER (18X24X1)	1	
10	43561-23E00	HOOK, RETURN SPRING	1	
11	02112-05163	SCREW	1	
12	09443-13029	SPRING	1	
13	43261-17C00	TUBE, SPRING GUIDE	1	

FIG.22

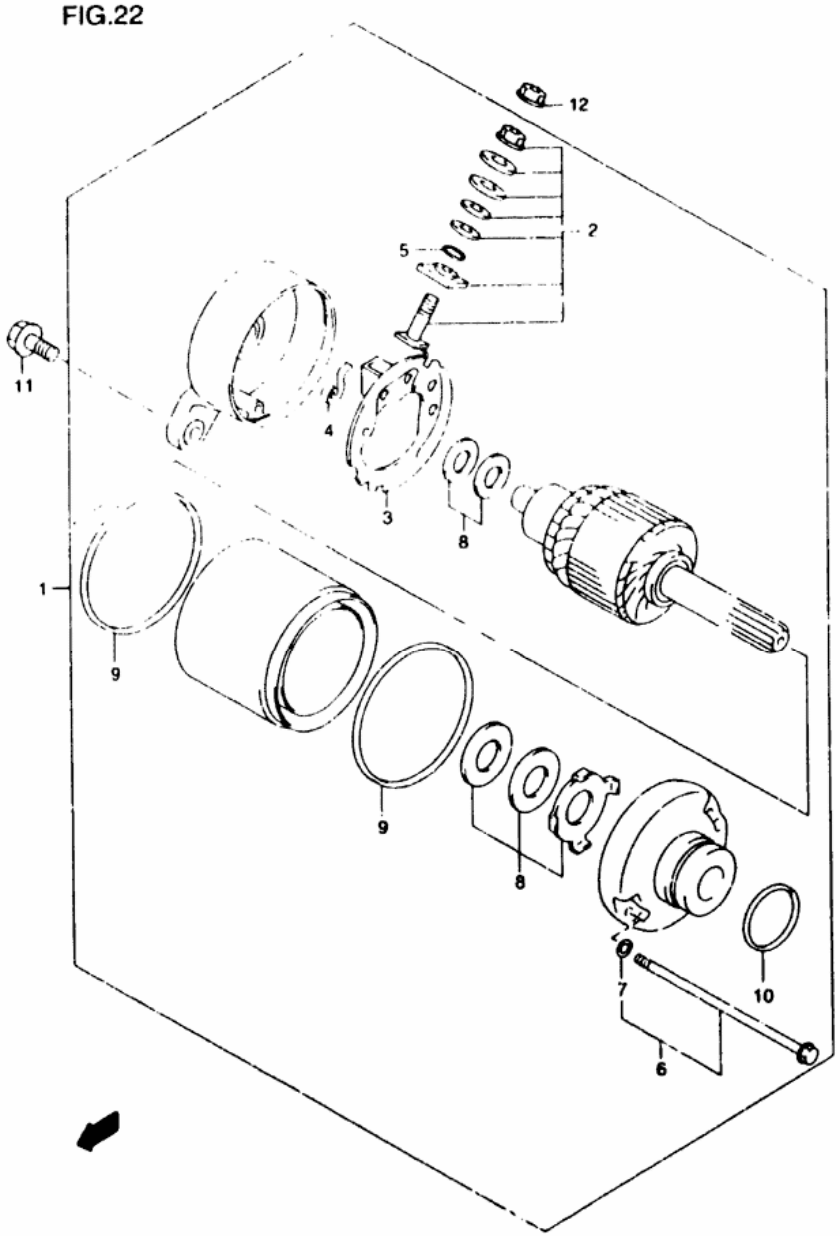

FIG 22 (E-2) STARTING MOTOR

REF.NO.	PART NO.	DESCRIPTION	Q'TY	REMARKS
*	31100-19F00	MOTOR ASSY STARTING	1	
2	31130-13E00	BRUSH TERMINAL SET	1	
3	31132-33E00	BRUSH HOLDER SET	1	
4	31135-31300	SPRING BRUSH	2	
5	31143-49040	O RING	1	
6	31280-19F00	SET BOLT ASSY	2	
7	31156-13E00	O RING	2	
8	31170-19B10	WASHER SET	1	
9	31264-13E00	O RING	2	
10	09280-25002	O RING (D 3 1 ID 24 4)	1	
11	01547-06253	BOLT	2	
12	08361-35068	NUT	1	

FIG.7

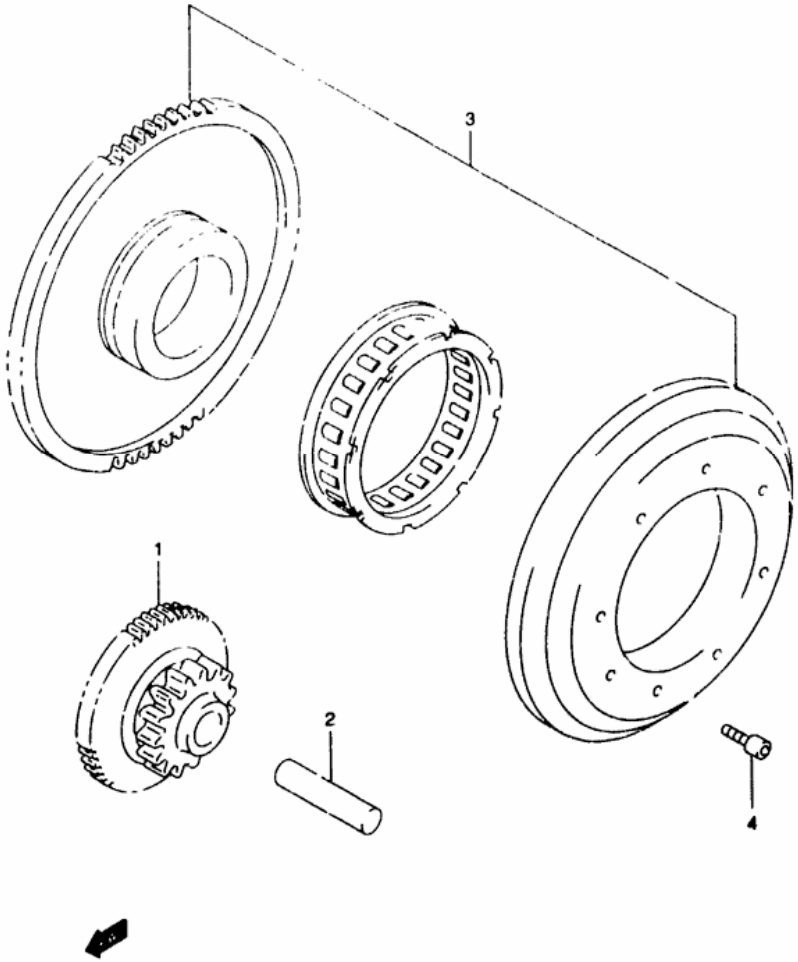

FIG.7 (C-2) STARTER CLUTCH

REF.NO.	PART NO.	DESCRIPTION	Q'TY	REMARKS
1	12611-20F01	GEAR, STARTER IDLE	1	
2	09206-12001	PIN	1	
3	12600-20840	CLUTCH SET, STARTER	1	
4	07130-08163	BOLT	6	

AIR CLEANER..... C-08 CRANKCASE COVER.... D-07 FRONT BRAKE HOSE... I-07 GEAR SHIFTING..... D-12 OPTIONAL..... J-07 REAR WHEEL..... J-04 TRANSMISSION..... D-10
BATTERY..... F-04 CRANKCASE..... B-05 FRONT CALIPER..... I-04 HANDLE BAR..... H-02 RADIATOR HOSE..... D-07 SEAT TAIL COVER.... H-11 TURNSIGNAL LAMP.... F-06

FIG.51

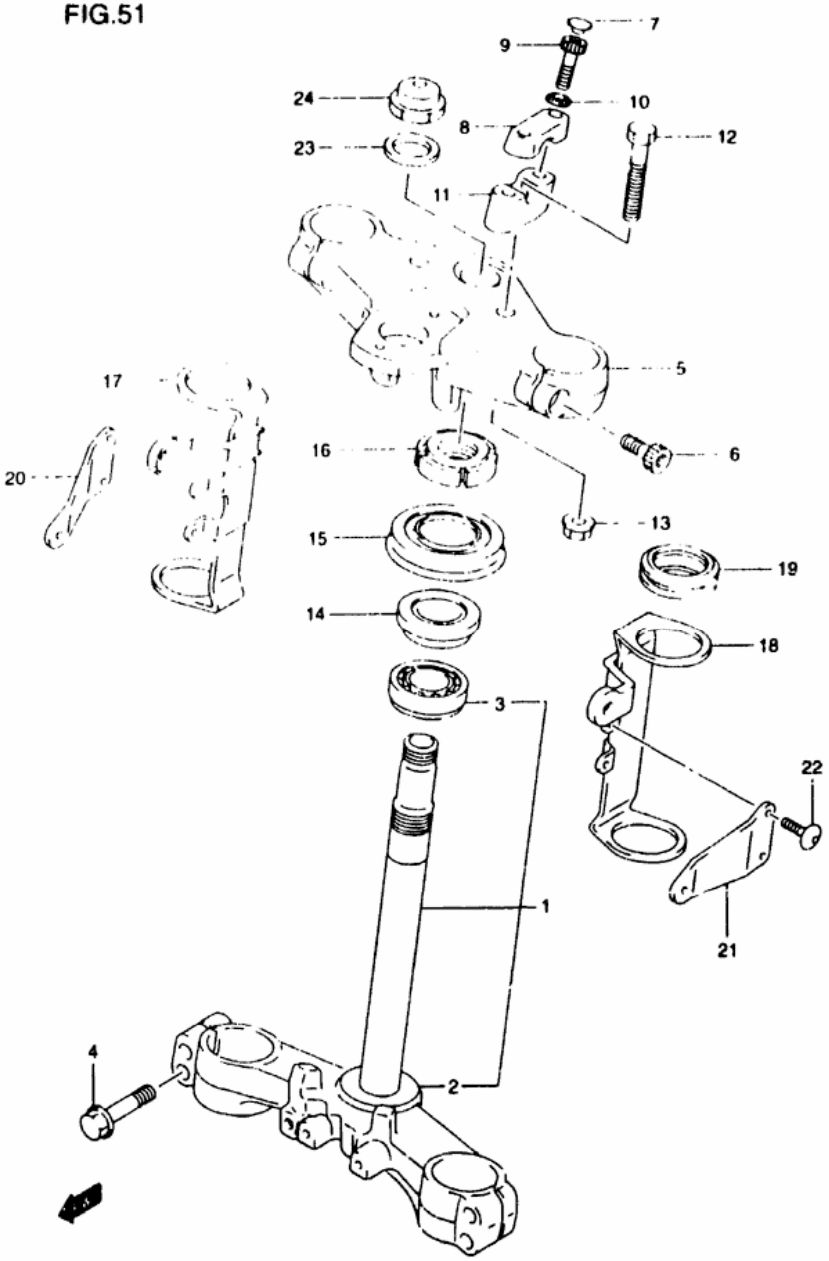

FIG 51 (I- 3) STEERING STEM (SV650X/Y)

REF.NO.	PART NO.	DESCRIPTION	Q'TY	REMARKS
1	51410-19F10	STEM, STEERING	1	
2	51644-12C00	SEAL, STEERING LOWER	1	
3	09267-30010	BEARING (30X55X17)	1	
4	01550-08407	BOLT	4	
5	51311-19F10	HEAD STEERING STEM	1	
6	51328-03FA0	BOLT	2	
7	09250-06011	CAP	4	
8	56211-45C50	HOLDER HANDLE UPPER	2	
9	07130-08307	BOLT	4	
10	09164-08015	WASHER	4	
11	56221-03FA0	HOLDER HANDLE LOWER	2	
12	51321-03FA0	BOLT	2	
13	08319-31107	NUT	2	
14	09267-25009	BEARING (25X47X15)	1	
15	09285-34009	OIL SEAL (34X60X11.5)	1	
16	51631-28000	NUT, STEERING STEM	1	
17	51530-19F00	BRACKET, HEADLAMP HOUSING RH	1	
18	51540-19F00	BRACKET, HEADLAMP HOUSING LH	1	
19	51553-38C00	DAMPER HEADLAMP HOUSING BRKT	4	
20	51851-19F00	STAY, HEADLAMP HOUSING RH	1	
21	51861-19F00	STAY, HEADLAMP HOUSING LH	1	
22	09139-06027	SCREW (6X12)	4	
23	51356-10D03	WASHER	1	
24	51353-28A10	NUT	1	

REFER TO FIG.51A(I-4; FOR SV650SX/SY E28

FIG.51A

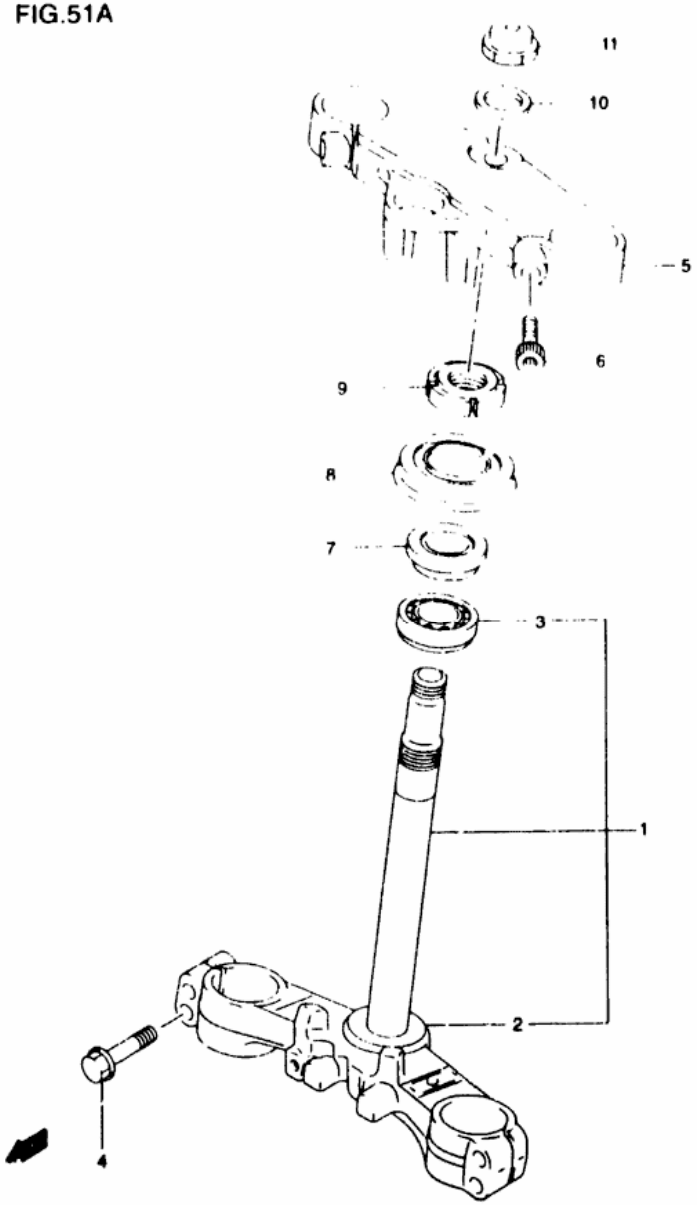

FIG 51A(1-4) STEERING STEM (SV650SX/SY E28) CANADA ONLY

REF.NO.	PART NO.	DESCRIPTION	Q'TY	REMARKS
1	51410-19F00	STEM STEERING	1	
2	51644-12C00	SEAL STEERING LOWER	1	
3	09267-30010	BEARING (30X55X17)	1	
4	01550-08407	BOLT	4	
5	51311-19F00	HEAD STEERING STEM	1	
6	51328-03FA0	BOLT	2	
7	09267-25009	BEARING (25x47x15)	1	
8	09285-34009	OIL SEAL (34x69x11.9)	1	
9	51631-28000	NUT STEERING STEM	1	
10	51356-10D03	WASHER	1	
11	51353-26A10	NUT	1	

AIR CLEANER..... C-08 CRANKCASE COVER.... B-07 FRONT BRAKE HOSE... I-07 GEAR SHIFTING..... D-12 OPTIONAL..... J-07 REAR WHEEL..... J-04 TRANSMISSION..... D-10
BATTERY..... E-04 CRANKCASE..... B-05 FRONT CALIPER..... I-06 HANDLE BAR..... H-02 RADIATOR HOSE..... D-07 SEAT TAIL COVER.... H-11 TURNSIGNAL LAMP.... F-06

FIG.56

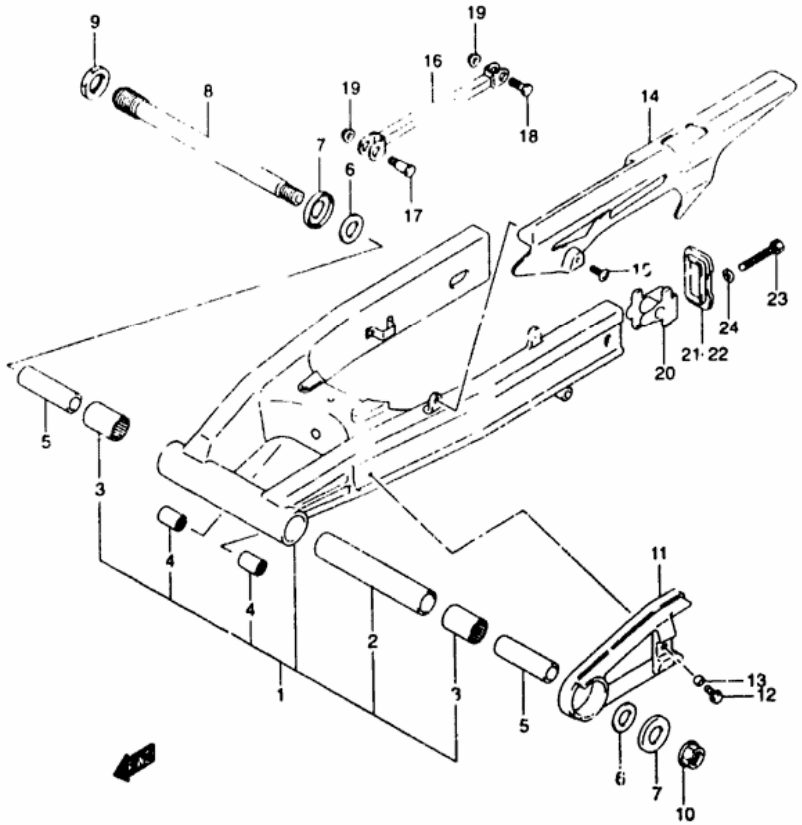

FIG.56 (J- 2) REAR SWINGING ARM

R'.F.NO.	PART NO.	DESCRIPTION	Q'TY	REMARKS
1	61000-19F11	SWINGING ARM ASSY, REAR	1	SV650X/Y
2	61281-19F00	SPACER, PIVOT CENTER	1	
3	09263-25024	BEARING, PIVOT (25X33X30)	2	
4	09263-20071	BEARING, ROD (20X27X23 5)	2	
5	61251-21E00	SPACER, PIVOT	2	
6	08211-20381	THRUST WASHER	2	
7	61262-17C00	DUST SEAL, PIVOT	2	
8	61211-19F00	SHAFT, PIVOT	1	
9	61214-19F00	NUT, PIVOT BOLT	1	
10	08319-31188	NUT	1	
11	61273-19F00	BUFFER, CHAIN TUCH DEFLECTOR	1	
12	09116-06152	BOLT (6X20)	1	
13	09180-06283	SPACER (6 5X10X7)	1	
14	61310-19F00	CASE, CHAIN	1	
15	09139-06083	SCREW (5X16)	2	
16	64310-19F00	TORQUE LINK, REAR	1	
17	09111-10051	BOLT, FRONT (10X39)	1	
18	09100-10187	BOLT, REAR (10X34)	1	
19	08319-31107	NUT	2	
20	61410-33D00	ADJUSTER, CHAIN	2	
21	61421-33D01	PLATE, ADJUSTER GUIDE RH	1	
22	61422-33D01	PLATE, ADJUSTER GUIDE LH	1	
23	09106-08119	BOLT (8X50)	2	
24	09164-08015	WASHER	2	

AIR CLEANER..... C-08 CRANKCASE COVER.... B-07 FRONT BRAKE HOSE... I-07 GEAR SHIFTING..... D-12 OPTIONAL..... J-07 REAR WHEEL..... J-04 TRANSMISSION..... D-10

FIG.29

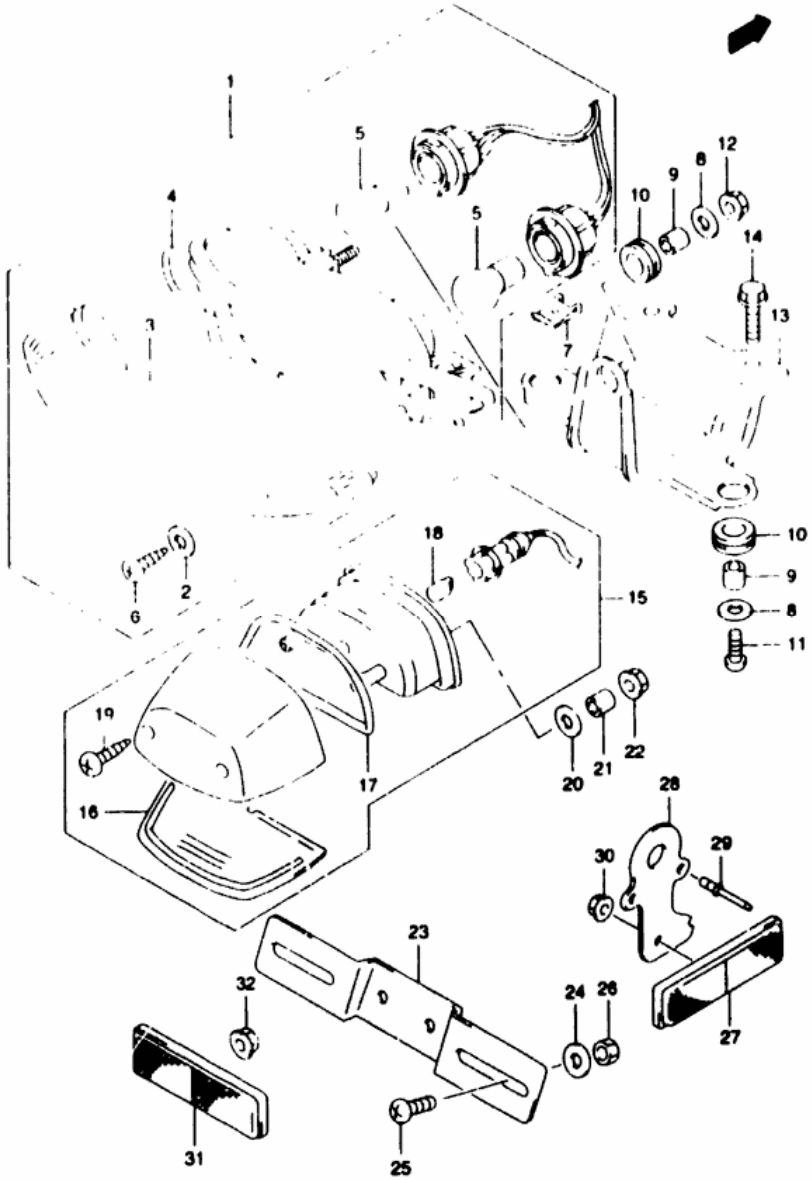

FIG 29 (F-8) TAIL LAMP

REF.NO.	PART NO.	DESCRIPTION	Q'TY	REMARKS
1	35710-02F30	LAMP ASSY, REAR COMBINATION	1	
2	35627-43010	GASKET	2	
3	35712-02F30	LENS	1	
4	35713-02F00	GASKET	1	
5	09471-12128	BULB (12V 21/5W)	1	
6	03211-04207	SCREW	2	
7	09148-05020	NUT	2	
8	09160-06088	WASHER (6.5X20X1.6)	3	
9	09180-06285	SPACER (6.5X10X9)	3	
10	09320-09007	CUSHION	3	
11	03541-05203	SCREW	2	
12	08316-10063	NUT	1	
13	35726-19F00	BRACKET, REAR COMBINATION	1	
14	01550-06123	BOLT	1	
15	35910-02F00	LAMP ASSY, LICENSE	1	
16	35912-02F00	LENS	1	
17	35913-02F00	GASKET	1	
18	09471-12081	BULB (12V 5W)	1	
19	03211-04163	SCREW	2	
20	09160-06088	WASHER (6.5X20X1.6)	2	
21	09180-05054	SPACER (5.5X9.5X11.5)	2	
22	08316-10053	NUT	2	
23	35927-48B30	BRACKET, LICENSE PLATE	1	
24	09160-06088	WASHER (6.5X20X1.6)	2	
25	02142-06123	SCREW	2	
26	08316-10063	NUT	2	
27	35970-07F00	REFLECTOR ASSY, REAR	2	
28	35975-19F00	BRACKET, REAR SIDE RR	2	
29	09229-04038	RIVET, REAR SIDE	2	
30	08310-00053	NUT, REAR SIDE	2	
31	35970-07F00	REFLEX REFLECTOR ASSY	1	
32	08316-10053	NUT, REAR	1	

AIR CLEANER..... C-08
BATTERY..... E-04
CAM CHAIN..... C-04
CRANKCASE COVER.... B-07
CRANKCASE..... B-05
CRANKSHAFT..... B-08
FRONT BRAKE HOSE... I-07
FRONT CALIPER..... I-06
FRONT CYLINDER HEAD B-02
GEAR SHIFTING..... D-12
HANDLE BAR..... H-02
HANDLE LEVER..... H-04
OPTIONAL..... J-07
RADIATOR HOSE..... D-07
RADIATOR..... D-06
REAR WHEEL..... J-04
SEAT TAIL COVER.... H-11
SEAT..... H-10
TRANSMISSION..... D-10
TURNSIGNAL LAMP.... F-06
WARNING LABEL..... H-09

FIG.28

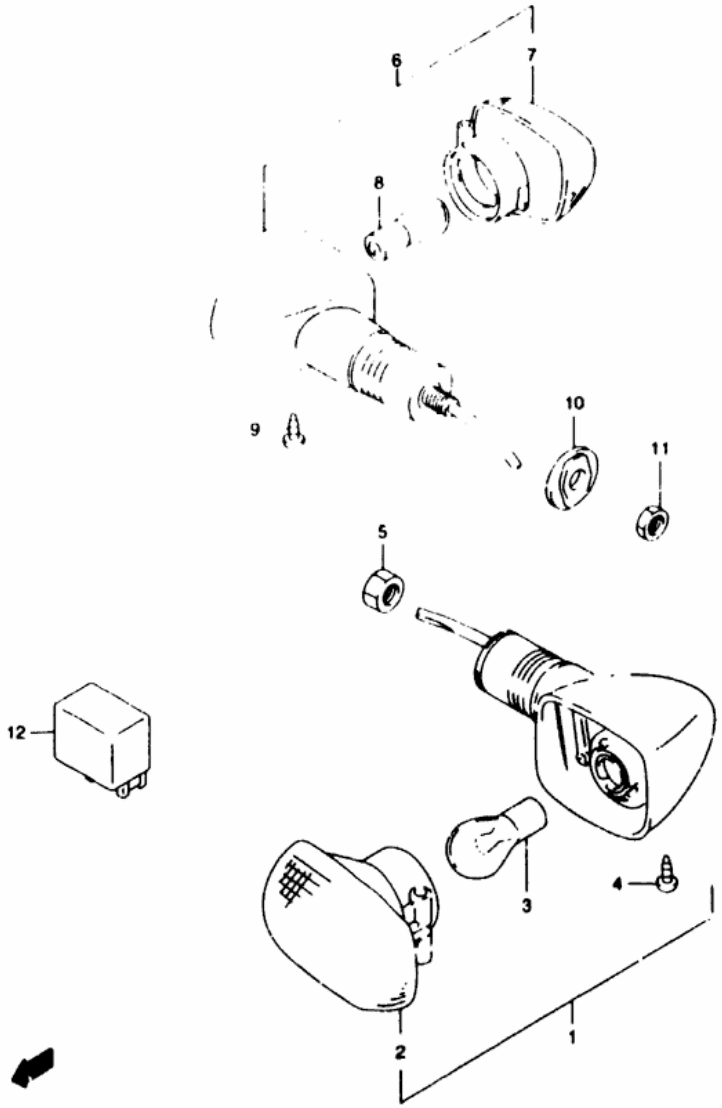

FIG 28 (F- 6) TURNSIGNAL LAMP (SV650X/Y)

REF.NO.	PART NO.	DESCRIPTION	Q'TY	REMARKS
1-1	35601-20F30	LAMP ASSY, FRONT TURNSIGNAL RH	1	
1-2	35602-20F30	LAMP ASSY FRONT TURNSIGNAL LH	1	
2	35610-33E00	LAMP UNIT	2	
3	09471-12045	BULB (12V 21W)	2	
4	03242-04123	SCREW	2	
5	08316-10103	NUT	2	
6-1	35603-33E10	LAMP ASSY REAR TURNSIGNAL RH	1	
6-2	35604-33E10	LAMP ASSY REAR TURNSIGNAL LH	1	
7	35610-33E00	LAMP UNIT	2	
8	09471-12045	BULB (12V 21W)	2	
9	03242-04123	SCREW	2	
10	35695-17C00	SPACER REAR TURNSIGNAL	2	
11	08310-00103	NUT	2	
12	38610-03F00	RELAY ASSY TURNSIGNAL LAMP	1	

REFER TO FIG 28A(F-7) FOR SV650SX/SY E28

AIR CLEANER..... C-08
BATTERY..... E-04
CAM CHAIN..... C-04
CRANKCASE COVER.... B-07
CRANKCASE..... B-05
CRANKSHAFT..... B-08
FRONT BRAKE HOSE... I-07
FRONT CALIPER..... I-06
FRONT CYLINDER HEAD B-02
GEAR SHIFTING..... D-12
HANDLE BAR..... H-02
HANDLE LEVER..... H-04
OPTIONAL..... J-07
RADIATOR HOSE..... D-07
RADIATOR..... D-06
REAR WHEEL..... J-04
SEAT TAIL COVER.... H-11
SEAT..... H-10
TRANSMISSION..... D-10
TURNSIGNAL LAMP.... F-06
WARNING LABEL..... H-09

FIG.28A

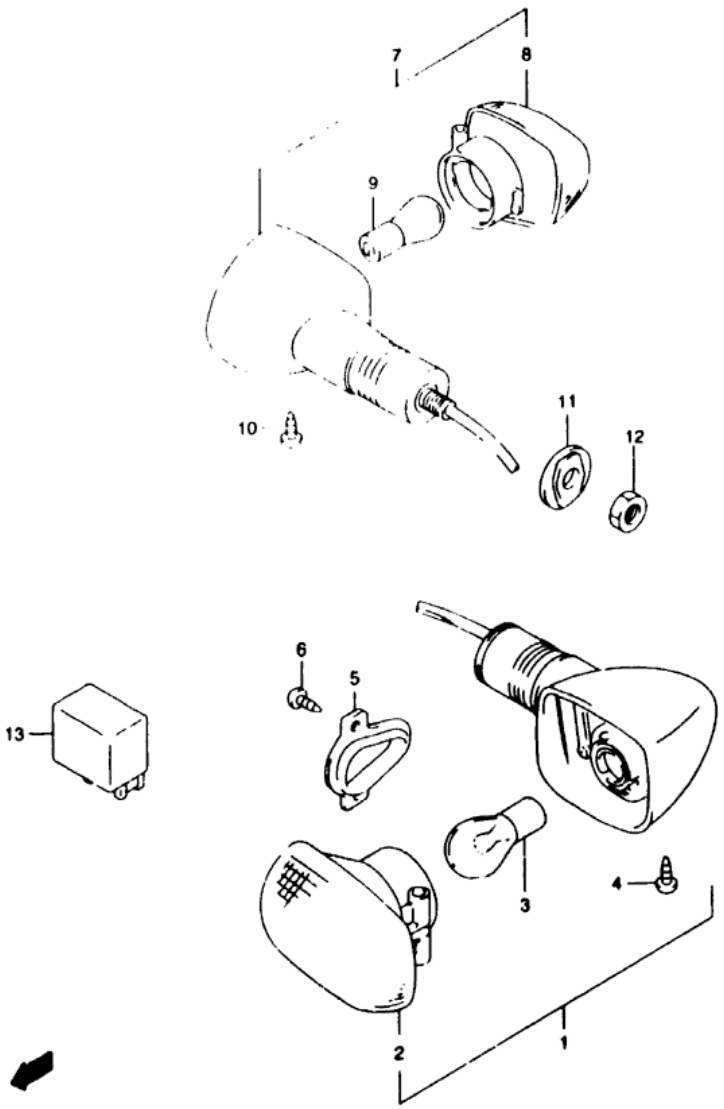

FIG.28A(F-7) TURNSIGNAL LAMP (SV650SX/SY E28)

REF.NO.	PART NO.	DESCRIPTION	Q'TY	REMARKS
1-1	35601-33E30	LAMP ASSY FRONT TURNSIGNAL RH	1	
1-2	35602-33E30	LAMP ASSY. FRONT TURNSIGNAL LH	1	
2	35610-33E00	LAMP UNIT	2	
3	09471-12045	BULB (12V.21W)	2	
4	03242-04123	SCREW	2	
5	35629-33E00	PLATE FRONT TURNSIGNAL LAMP	2	
6	03511-05103	SCREW	4	
7-1	35603-33E10	LAMP ASSY REAR TURNSIGNAL RH	1	
7-2	35604-33E10	LAMP ASSY REAR TURNSIGNAL LH	1	
8	35610-33E00	LAMP UNIT	2	
9	09471-12045	BULB (12V 21W)	2	
10	03242-04123	SCREW	2	
11	35695-17C00	SPACER REAR TURNSIGNAL	2	
12	08310-00103	NUT	2	
13	38610-03F00	RELAY ASSY TURNSIGNAL LAMP	1	

FIG.20

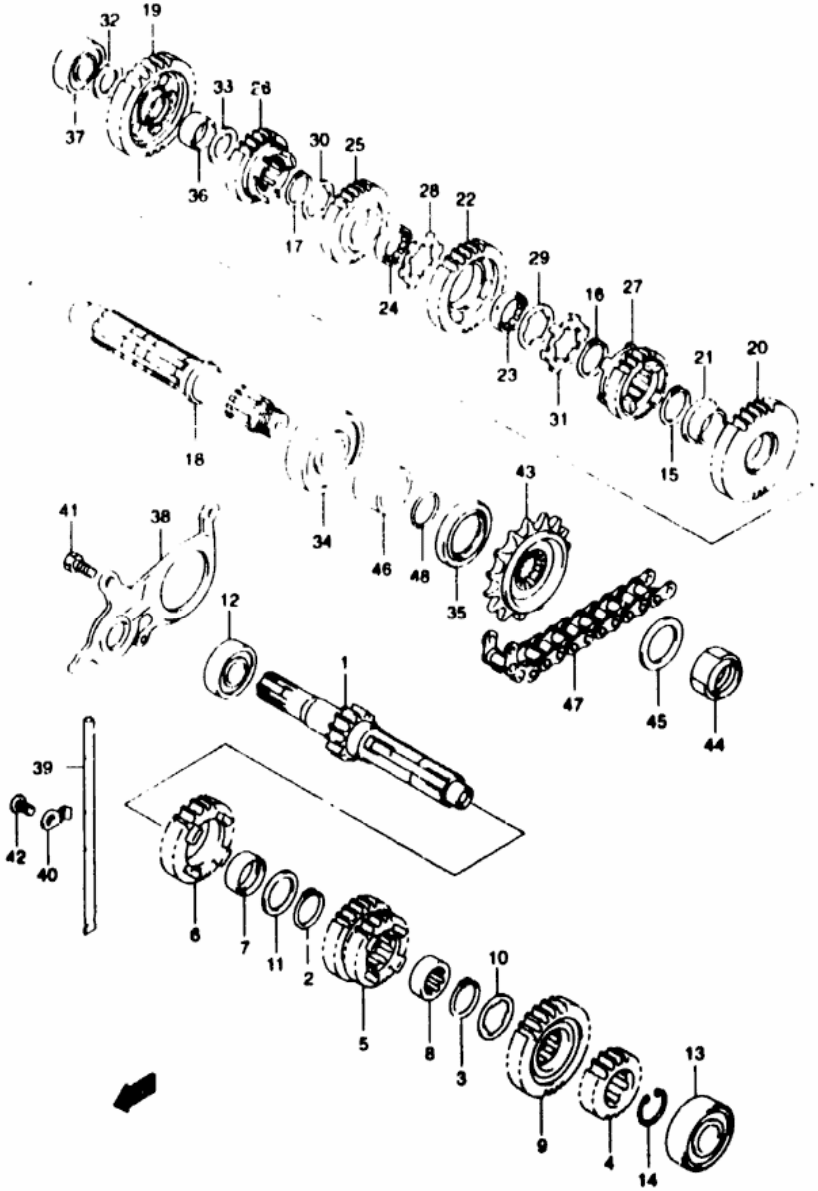

FIG 20 (D-10) TRANSMISSION

REF.NO.	PART NO.	DESCRIPTION	Q'TY	REMARKS
1	24120-19F00	SHAFT, COUNTER (NT 13)	1	
2	24127-19F00	CIRCLIP, 5TH DRIVE GEAR	1	
3	24127-19F00	CIRCLIP, 6TH DRIVE GEAR	1	
4	24221-20F00	GEAR, 2ND DRIVE (NT 18)	1	
5	24231-20F00	GEAR, 3RD & 4TH DRIVE (NT 21/24)	1	
6	24251-20F01	GEAR, 5TH DRIVE (NT 26)	1	
7	24252-19F00	BUSH 5TH DRIVE	1	
8	24252-38A10	BUSH 6TH DRIVE	1	
9	24261-20F00	GEAR 6TH DRIVE (NT 27)	1	
10	09167-25021	WASHER 6TH DRIVE	1	25.1x33X1.0
11	09181-25167	WASHER 5TH DRIVE	1	
12	09262-17046	BEARING CNTR SHAFT LH	1	17x40x12
13	09262-20116	BEARING CNTR SHAFT RH	1	20x52x15
14	09380-25012	RING 2ND DRIVE	1	
15	24127-19F00	CIRCLIP 2ND DRIVEN	1	
16	24127-19F00	CIRCLIP 3RD DRIVEN	1	
17	24127-19F00	CIRCLIP 4TH DRIVEN	1	
18	24130-19F01	SHAFT DRIVE	1	
19	24311-20F00	GEAR, 1ST DRIVEN (NT 32)	1	
20	24321-20F00	GEAR, 2ND DRIVEN (NT 32)	1	
21	24322-19F00	BUSH, 2ND DRIVEN	1	
22	24331-20F00	GEAR, 3RD DRIVEN (NT 29)	1	
23	24332-24510	BUSH, 3RD DRIVEN	1	
24	24332-24510	BUSH 4TH DRIVEN	1	
25	24341-20F00	GEAR, 4TH DRIVEN (NT 27)	1	
26	24351-20F01	GEAR, 5TH DRIVEN (NT 25)	1	
27	24361-20F00	GEAR 6TH DRIVEN (NT 23)	1	
28	09167-25013	LOCK WASHER, 3RD DRIVEN	1	
29	09167-25021	WASHER, 3RD DRIVEN	1	
30	09167-25021	WASHER, 4TH DRIVEN	1	
31	09169-25001	WASHER 3RD DRIVEN LOCK	1	
32	09181-17195	WASHER, 1ST DRIVEN	1	17X29X1.0
33	09181-20195	WASHER, 1ST DRIVEN	1	20X30X1.0

FIG.20

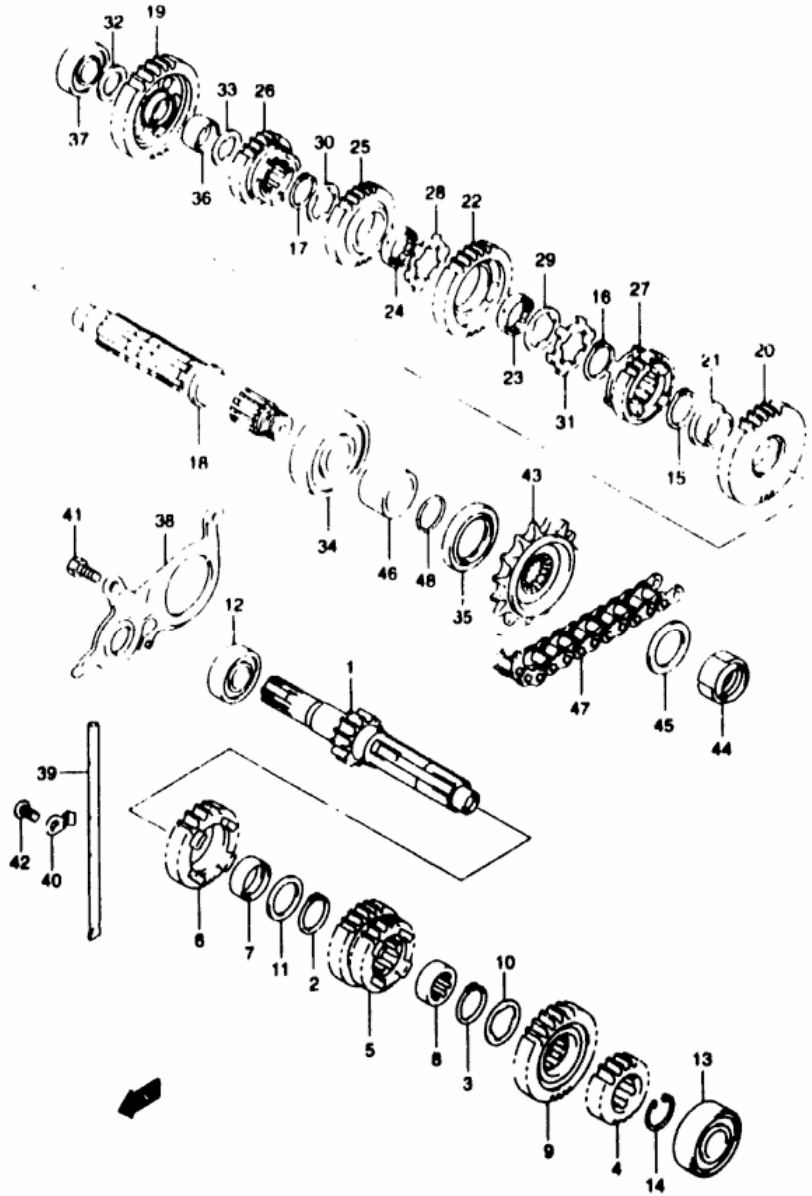

FIG 20 (D-11) TRANSMISSION

REF.NO.	PART NO.	DESCRIPTION	Q'TY	REMARKS
34	09262-25125	BEARING, DRIVE SHAFT LH	1	25X62X17
35	09283-36003	SEAL, DRIVE SHAFT	1	36X50X6
36	09300-20032	BUSH, 1ST DRIVEN	1	
37	09262-17023	BEARING, DRIVE SHAFT RH	1	17X40X12
38	24751-19F00	RETAINER, DRIVE SHAFT OIL SEAL	1	
39	24881-12C20	GUIDE, T/M OIL	1	
40	24885-12C10	RETAINER, TRANSMISSION OIL	1	
41	01500-06123	BOLT	3	
42	02112-06123	SCREW	1	
43	27510-20F00	SPROCKET, ENGINE (NT 15)	1	
44	09159-20004	NUT, ENGINE SPROCKET	1	
45	09167-25019	WASHER, ENGINE SPROCKET	1	
46	27531-19F00	SPACER, ENGINE SPROCKET	1	
47-1	27600-32C10-110	CHAIN ASSY (DID525V9 110LE)	1	SV650X
47-2	27600-32C10-108	CHAIN ASSY (DID525V9 108LE)	1	SV650SX E28
48	09280-24010	O RING (ID 2.4 ID 23.7)	1	

AIR CLEANER..... C-02
BATTERY..... E-04
CAM CHAIN..... C-04
CRANKCASE COVER.... B-07
CRANKCASE..... B-05
CRANKSHAFT..... B-08
FRONT BRAKE HOSE... I-07
FRONT CALIPER..... I-06
FRONT CYLINDER HEAD B-02
GEAR SHIFTING..... D-12
HANDLE BAR..... H-02
HANDLE LEVER..... H-04
OPTIONAL..... J-07
RADIATOR HOSE..... D-07
RADIATOR..... D-06
REAR WHEEL..... J-04
SEAT TAIL COVER.... H-11
SEAT..... H-10
TRANSMISSION..... D-10
TURNSIGNAL LAMP.... F-06
WARNING LABEL..... H-09

FIG.30

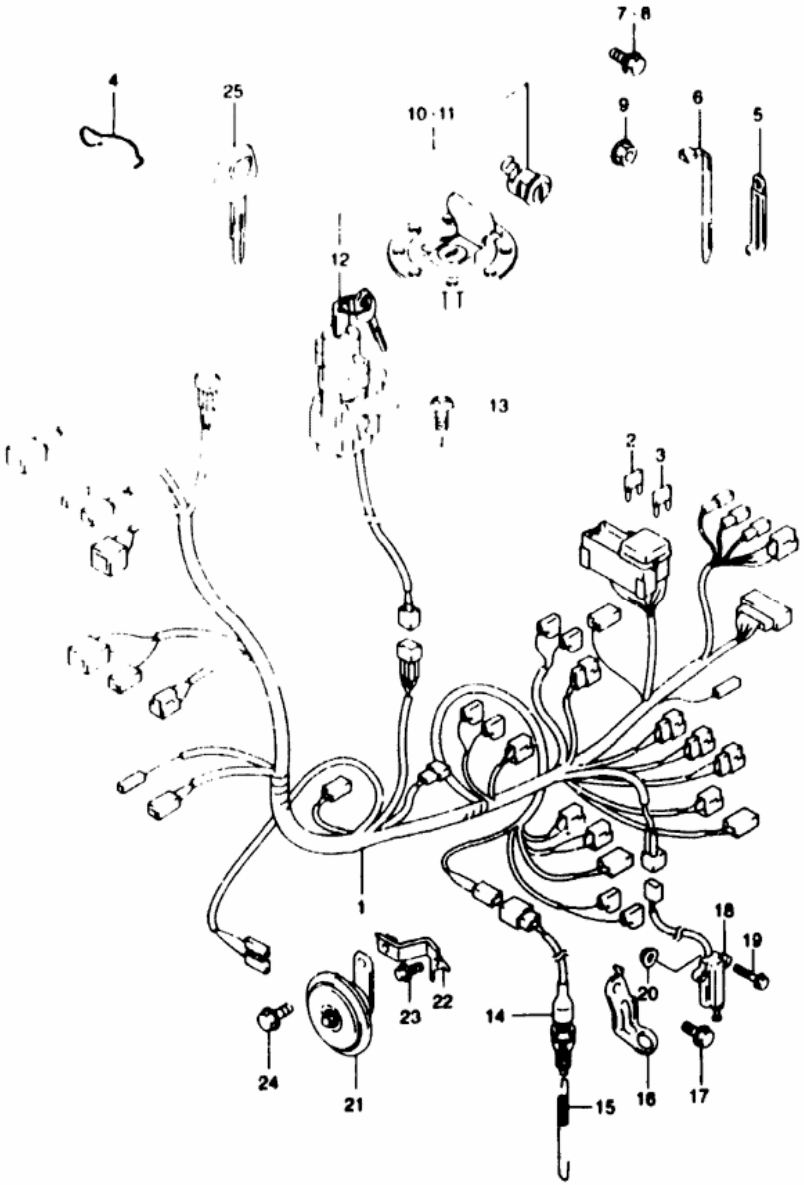

FIG 30 (F- 9) WIRING HARNESS (SV650X/Y)

REF.NO.	PART NO.	DESCRIPTION	Q'TY	REMARKS
1	36610-20F10	HARNESS, WIRING NO 1	1	
2	09481-10501	FUSE (10A)	2	
3	09481-15501	FUSE (15A)	3	
4	36619-20F00	GUIDE WIRING HARNESS	1	
5-1	09404-06432	CLAMP (L 80)	4	
5-2	09404-06435	CLAMP (L 135)	1	
5-3	09404-08207	CLAMP (L 97)	4	
6-1	09407-14403	CLAMP (L 125)	5	
6-2	09407-18402	CLAMP (L 165)	4	
7	01550-06123	BOLT WIRING HARNESS	2	
8	01550-08253	BOLT WIRING HARNESS	1	
9	08316-10083	NUT WIRING HARNESS	1	
10	37101-19830	LOCK SET	1	
11	37101-19840	LOCK SET	1	E33
12	37100-19F00	LOCK ASSY STEERING	1	
13	09139-08016	BOLT (8X20)	2	
14	37740-31D00	SWITCH ASSY STOP LAMP	1	
15	09443-06005	SPRING	1	
16	43251-19F10	BRACKET STOP LAMP SWITCH	1	
17	01550-06123	BOLT	1	
18	37840-19F00	SWITCH ASSY SIDE STAND	1	
19	37849-19F00	BOLT	2	
20	08316-10063	NUT	1	
21	38500-02F60	HORN ASSY	1	
22	38590-19F00	BRACKET, HORN	1	
23	01550-06123	BOLT	1	
24	01550-08123	BOLT	1	
25	37146-33E00	KEY BLANK	1	OPT

REFER TO FIG 30A(F-10) FOR SV650SX/SY E28

FIG.30A

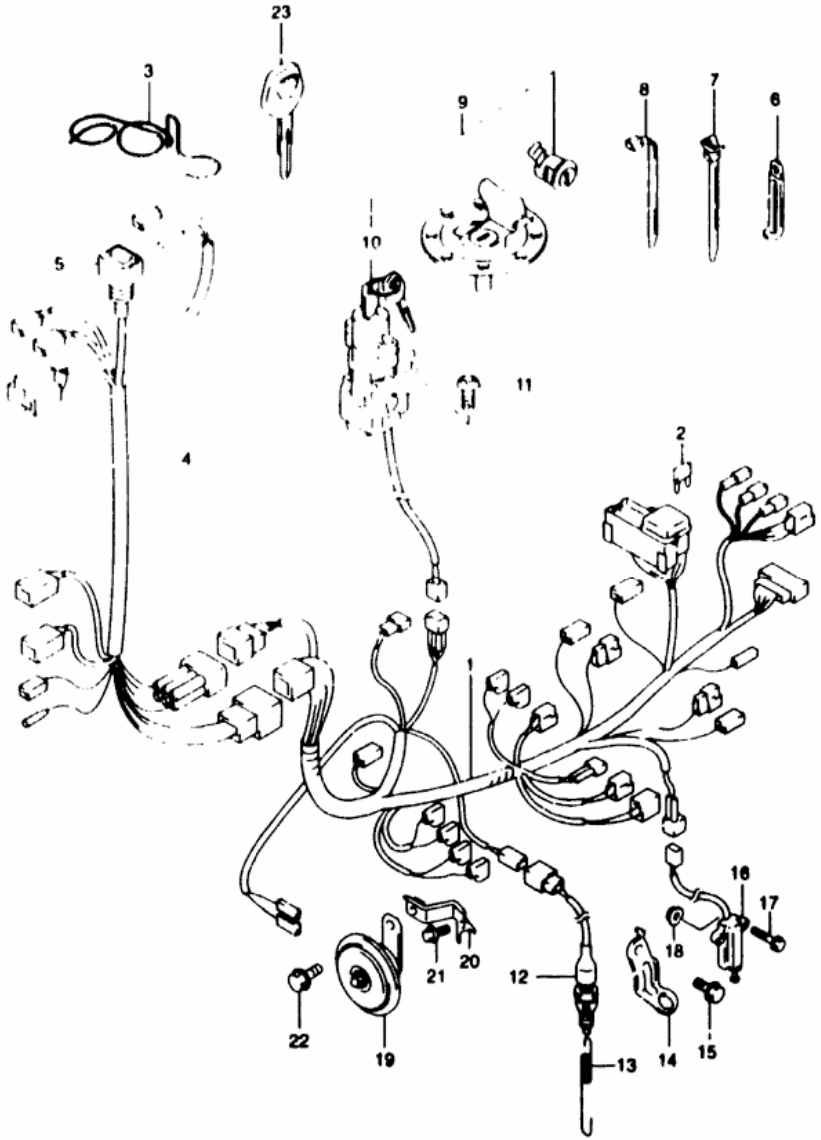

FIG 30A(F-10) WIRING HARNESS (SV650SX/SY E28)

REF.NO.	PART NO.	DESCRIPTION	Q'TY	REMARKS
1	36610-19F00	HARNESS, WIRING NO 1	1	
2-1	09481-10501	FUSE (10A)	2	
2-2	09481-15501	FUSE (15A)	3	
3	36619 33E00	GUIDE WIRING HARNESS	1	
4	36620-19F10	HARNESS WIRING NO 2	1	
5	36618-33E00	COVER SPEEDOMETER COUPLER	1	
6-1	09404-06432	CLAMP (L 80)	3	
6-2	09404-06435	CLAMP (L 135)	1	
7	09407-11402	CLAMP (L 90)	2	
8-1	09407-14403	CLAMP (L 125)	5	
8-2	09407-18402	CLAMP (L 165)	5	
9	37101-19830	LOCK SET	1	
10	37100 19F00	LOCK ASSY STEERING	1	
11	09139-08016	BOLT 8x20	2	
12	37740 31D00	SWITCH ASSY STOP LAMP	1	
13	09443-06005	SPRING	1	
14	43251-19F00	BRACKET STOP LAMP SWITCH	1	
15	01550-06123	BOLT	1	
16	37840-19F00	SWITCH ASSY SIDE STAND	1	
17	37849-19F00	BOLT	2	
18	08316-10063	NUT	1	
19	38500-02F60	HORN ASSY	1	
20	38590-19F00	BRACKET HORN	1	
21	01550-06123	BOLT	1	
22	01550-08123	BOLT	1	
23	37146-33E00	KEY, BLANK	1	OPT

AIR CLEANER..... C-08
BATTERY..... E-04
CRANKCASE COVER.... B-07
CRANKCASE..... B-05
FRONT BRAKE HOSE... I-07
FRONT CALIPER..... I-06
GEAR SHIFTING..... D-12
HANDLE BAR..... H-02
OPTIONAL..... J-07
RADIATOR HOSE..... D-07
REAR WHEEL..... J-04
SEAT TAIL COVER.... H-11
TRANSMISSION..... D-10
TURNSIGNAL LAMP.... F-06

FIG.15

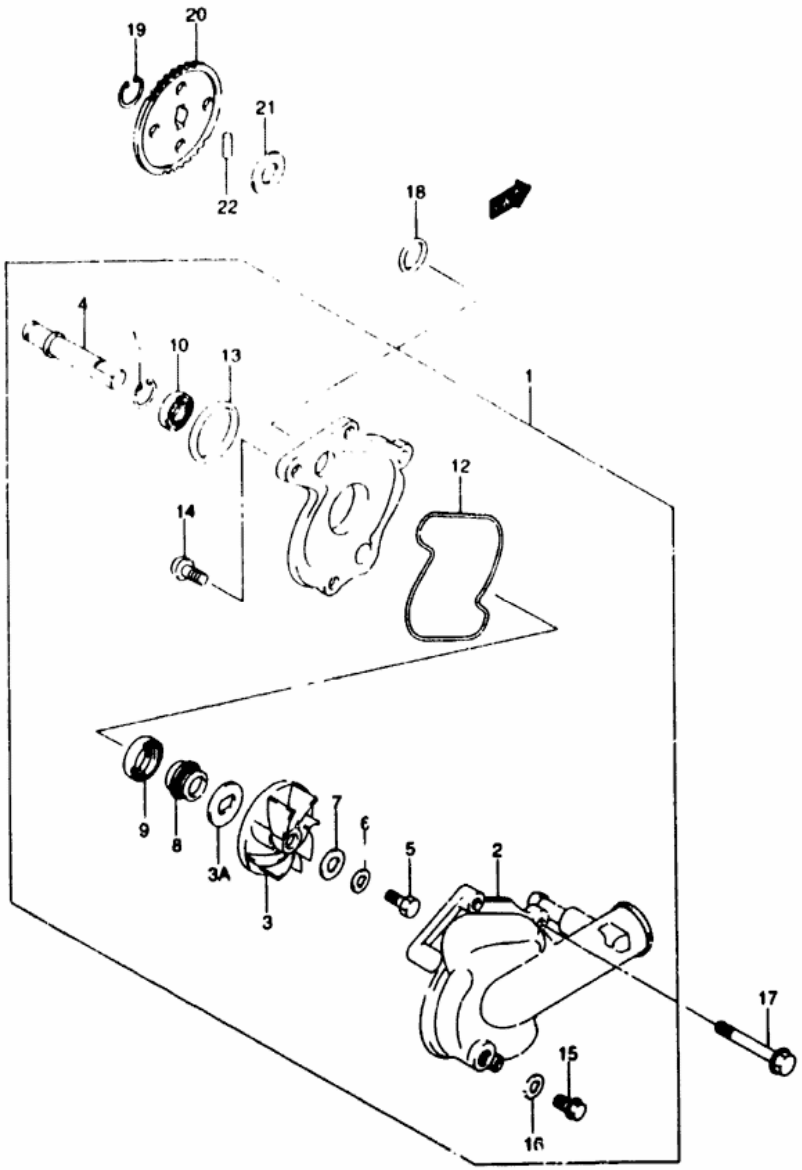

FIG.15 (D-4) WATER PUMP (MODEL X)

REF.NO.	PART NO.	DESCRIPTION	Q'TY	REMARKS
1	17400-19F02	PUMP ASSY, WATER	1	
2	17411-19F00	CASE, WATER PUMP	1	
3	17491-19F01	IMPELLER, WATER PUMP	1	
3A	17533-02F00	WASHER, IMPELLER	1	
4	17511-19F00	SHAFT WATER PUMP	1	
5	09100-06162	BOLT (6X13)	1	
6	09164-06006	LOCK WASHER	1	
7	09168-06025	GASKET (6X15X2 2)	1	
8	17470-02F10	SEAL, MECHANICAL	1	
9	09283-10004	OIL SEAL (10X21X5)	1	
10	09262-10014	BEARING (10X26X8)	1	
11	08332-11086	E RING	1	
12	17418-19F00	O RING	1	
13	17435-33400	O RING	1	
14	02112-06163	SCREW	2	
15	17415-14300	BOLT DRAIN	1	
16	09168-08008	GASKET (8 2X14X1)	1	
17	09103-06206	BOLT	3	
18	09280-22001	O RING (D 2 4 ID 21 8)	2	
19	08331-31106	CIRCLIP	1	
20	17461-19F00	GEAR, WATER PUMP DRIVEN	1	
21	09181-10159	SHIM	1	
22	09261-04002	ROLLER	1	

REFER TO FIG 15A(D-5) FOR MODEL Y

AIR CLEANER..... C-08 CRANKCASE COVER.... B-07 FRONT BRAKE HOSE... I-07 GEAR SHIFTING..... D-1 OPTIONAL..... J-07 REAR WHEEL..... J-04 TRANSMISSION..... D-10
BATTERY..... E-04 CRANKCASE..... B-05 FRONT CALIPER..... I-06 HANDLE BAR..... H-02 RADIATOR HOSE..... D-07 SEAT TAIL COVER.... H-11 TURNSIGNAL LAMP.... F-06

FIG.15A

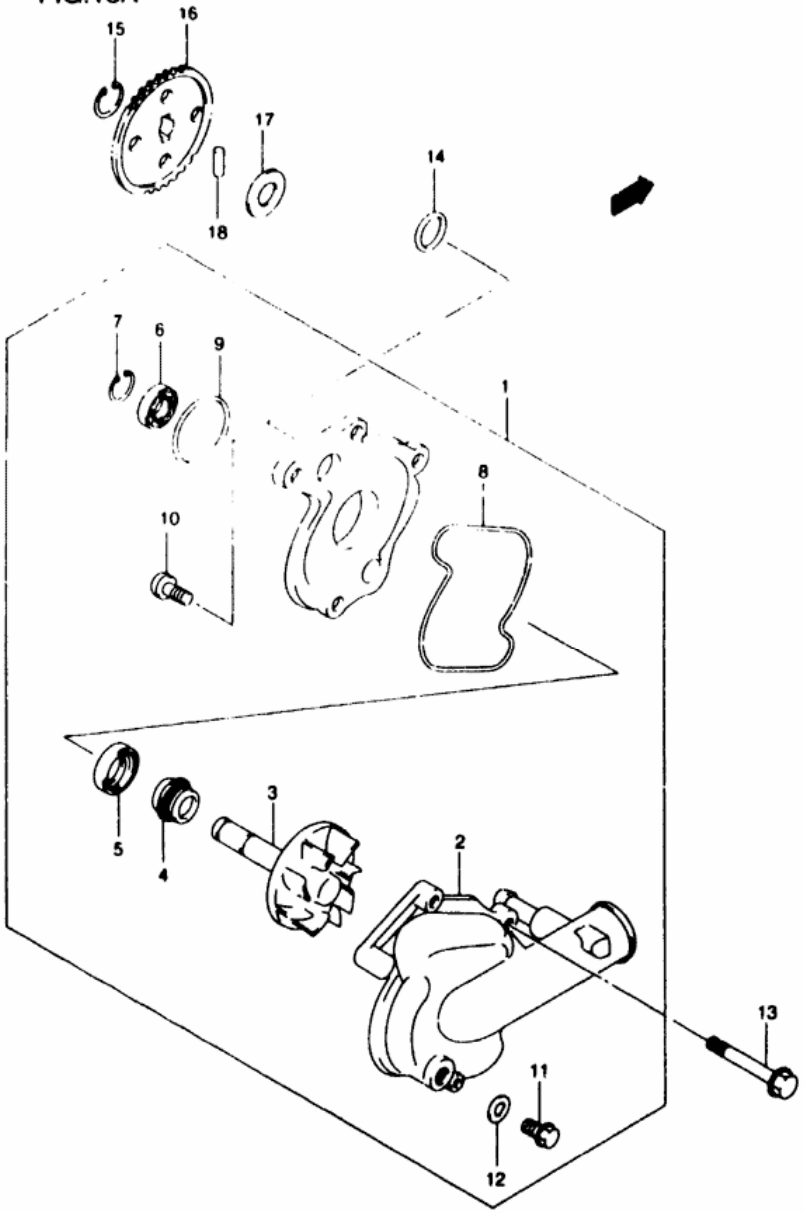

FIG 15A(D- 5) WATER PUMP (MODEL Y)

REF.NO.	PART NO.	DESCRIPTION	Q'TY	REMARKS
1	17400-19F10	PUMP ASSY. WATER	1	
2	17411-19F00	CASE, WATER PUMP	1	
3	17491-19F10	IMPELLER/SHAFT	1	
4	17470-02F10	SEAL, MECHANICA'	1	
5	09283-10004	OIL SEAL (10X21X5)	1	
6	09262-10014	BEARING (10X26X8)	1	
7	08332-11086	E RING	1	
8	17418-19F00	O RING	1	
9	17435-33400	O RING	1	
10	02112-06163	SCREW	2	
11	17415-14300	BOLT DRAIN	1	
12	09168-08008	GASKET (8.2×14×1)	1	
13	09103-06206	BOLT	3	
14	09280-22001	O RING (ID 24 ID 21.8)	2	
15	08331-31106	CIRCLIP	1	
16	17461-19F00	GEAR WATER PUMP DRIVEN	1	
17	09181 10158	SHIM	1	
18	09261-04002	ROLLER	1	

AIR CLEANER..... C-08
BATTERY..... E-04
CAM CHAIN..... C-04
CAM SHAFT / VALVE.. C-03
CARBURETOR FITTINGS C-07
CRANKCASE COVER.... B-07
CRANKCASE..... B-05
CRANKSHAFT..... B-08
CYLINDER..... B-04
ELECTRICAL E-05
FRONT BRAKE HOSE... I-07
FRONT CALIPER..... I-06
FRONT CYLINDER HEAD B-02
FRONT FENDER..... G-11
FRONT FORK DAMPER I-02
GEAR SHIFTING..... D-12
HANDLE BAR..... H-02
HANDLE LEVER..... H-04
HANDLE SWITCH..... F-11
HEADLAMP HOUSING G-10
OPTIONAL..... J-07
RADIATOR HOSE..... D-07
RADIATOR..... D-06
REAR CALIPER..... J-05
REAR CUSHION LEVER. J-03
REAR WHEEL..... J-04
SEAT TAIL COVER.... H-11
SEAT..... H-10
SPEEDOMETER..... F-02
STAND..... G-03
TRANSMISSION..... D-10
TURNSIGNAL LAMP.... F-06
WARNING LABEL..... H-09
WATER PUMP..... D-04
WIRING HARNESS..... F-09

FIG.18

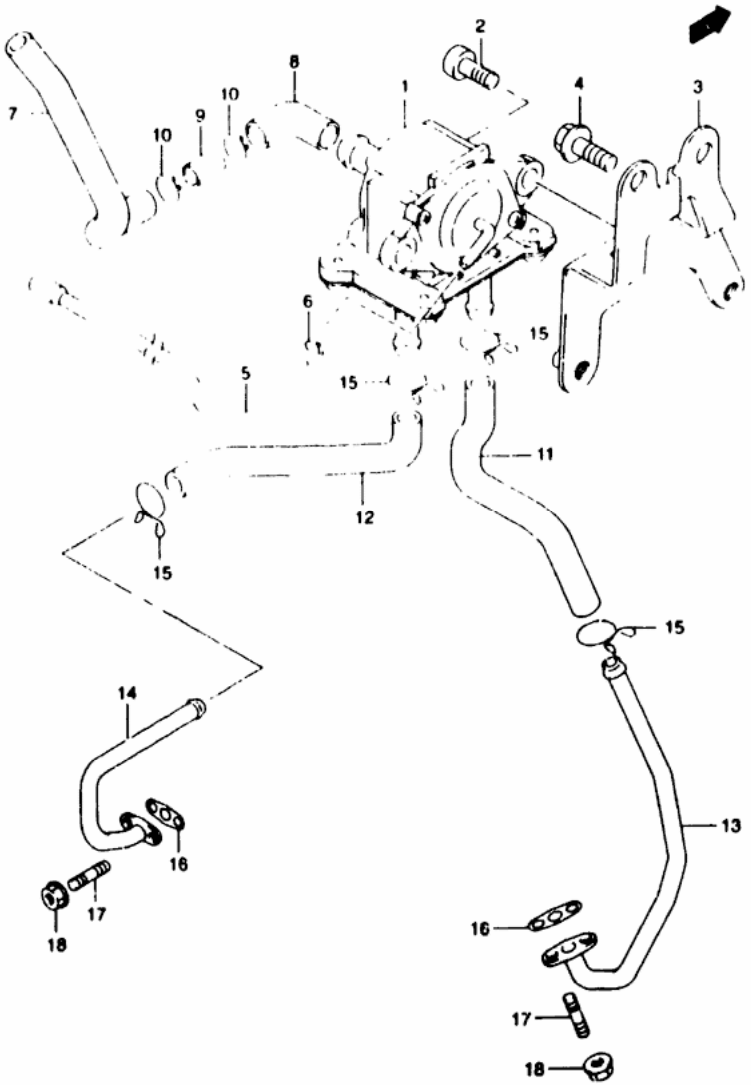

FIG 18 (D-8) 2ND AIR (E33)

REF.NO.	PART NO.	DESCRIPTION	Q'TY	REMARKS
1	18450-20F00	VALVE ASSY. 2ND AIR	1	
2	07130-06163	BOLT. 2ND AIR VALVE	2	
3	18610-20F00	BRACKET. 2ND AIR VALVE	1	
4	02162-06163	BOLT 2ND AIR BRACKET	1	
5	09359-40701-600	HOSE 2ND AIR VACUUM	1	L 600 φ270
6	09401-06101	CLIP	1	
7	18711-20F00	HOSE 2ND AIR CLEANER	1	
8	18712-21F00	HOSE 2ND AIR CLEANER JOINT	1	
9	13888-19B00	JOINT 2ND AIR CLEANER HOSE	1	
10	09401-15101	CLIP	4	
11	18461-20[illegible]0	HOSE 2ND AIR VALVE FRONT	1	
12	18471-20F00	HOSE 2ND AIR VALVE REAR	1	
13	18410-20F00	PIPE 2ND AIR FRONT	1	
14	18420-20F00	PIPE 2ND AIR REAR	1	
15	09401-13409	CLIP	4	
16	18441-45C00	GASKET 2ND AIR PIPE	2	
17	01421-06163	BOLT STUD	4	
18	08316-10063	NUT	4	

AIR CLEANER..... C-08 CRANKCASE COVER.... B-07 FRONT BRAKE HOSE... I-07 GEAR SHIFTING..... D-12 OPTIONAL..... J-07 REAR WHEEL..... J-04 TRANSMISSION..... D-10
BATTERY..... E-04 CRANKCASE..... B-05 FRONT CALIPER..... I-04 HANDLE BAR..... H-02 RADIATOR HOSE..... D-07 SEAT TAIL COVER.... H-11 TURNSIGNAL LAMP.... F-06

FIG.41A

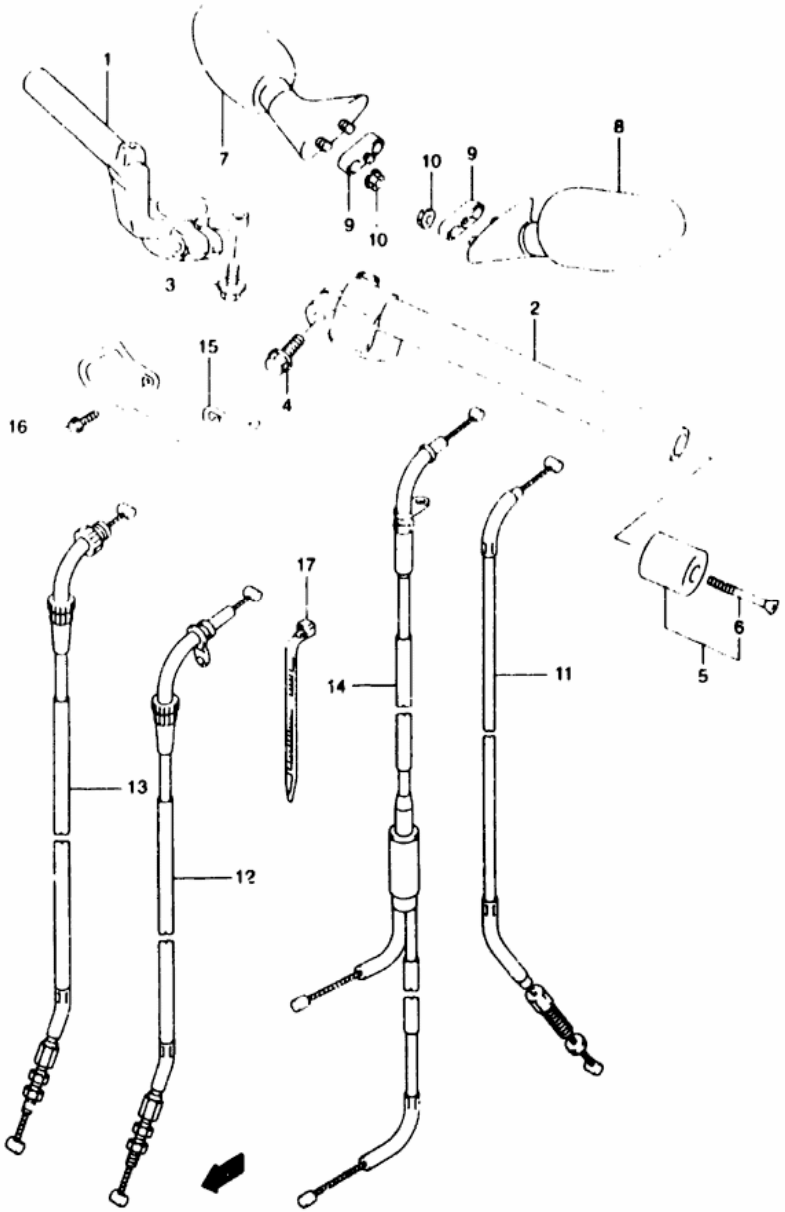

FIG. A(H- 3) HANDLE BAR (SV650SX/SY E28)

REF.NO.	PART NO.	DESCRIPTION	Q'TY	REMARKS
1	56111-19F00	HANDLE BAR, RH	1	
2	56151-19F00	HANDLE BAR, LH	1	
3	01550-06203	BOLT	2	
4	09103-08269	BOLT (8X30)	2	
5	56200-04821	BALANCER SET HANDLE BAR	2	
6	02122-06603	SCREW	2	
7	56500-19F00	MIRROR ASSY REAR VIEW RH	1	
8	56600-19F00	MIRROR ASSY REAR VIEW LH	1	
9	94576-19F00	CUSHION REAR VIEW MIRROR	2	
10	56619-17C00	NUT REAR VIEW MIRROR	4	
11	58200-19F00	CABLE ASSY CLUTCH	1	
12	58300-20F00	CABLE ASSY THROTTLE NO.1	1	
13	58300-20F10	CABLE ASSY THROTTLE NO.2	1	
14	58410-19F00	CABLE STARTER	1	
15	58621-19F00	GUIDE CABLE	1	
16	01550-06123	BOLT	2	
17	09407-14407	CLAMP	1	

FIG.42

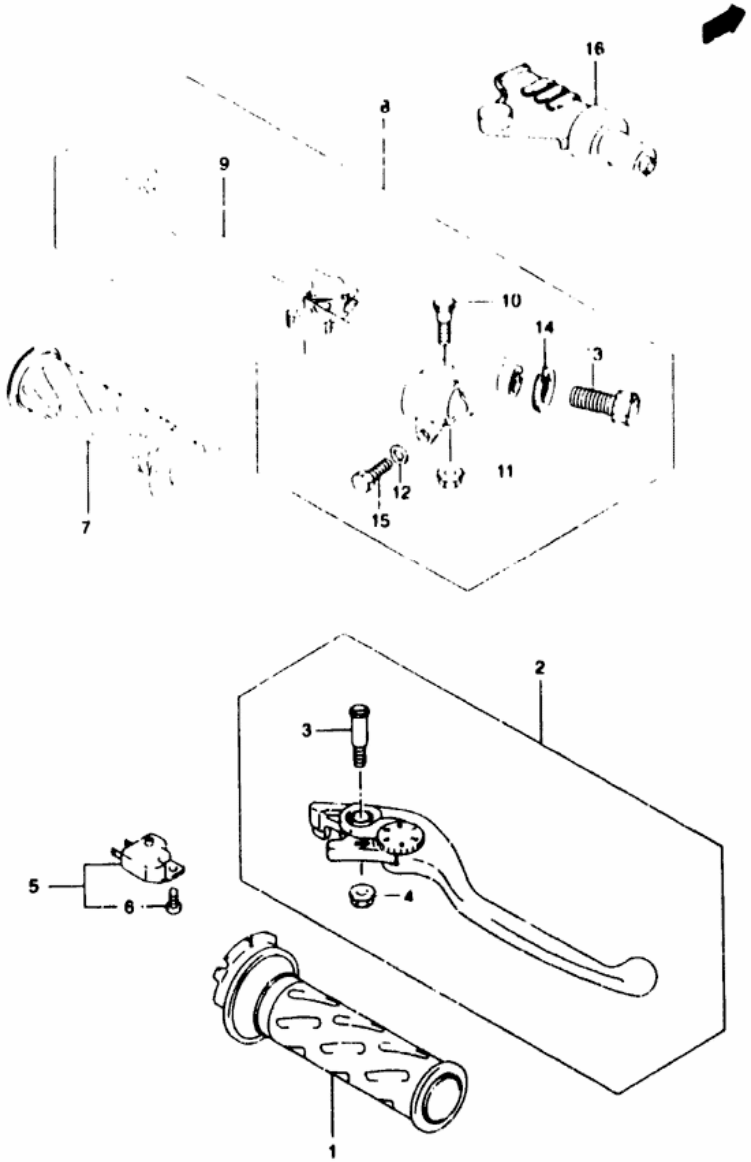

FIG 42 (H- 4) HANDLE LEVER

REF.NO.	PART NO.	DESCRIPTION	Q'TY	REMARKS
1	57110-46E01	GRIP, THROTTLE	1	
2	57300-33E01	LEVER ASSY BRAKE	1	
3	57431-17C00	BOLT KNOCKER	1	
4	08316-10063	NUT	1	
5	57460-17C00	SWITCH ASSY STOP	1	
6	57465-17C00	SCREW	1	
7	57211-22D01	GRIP LH	1	
8-1	57500-10D01	LEVER ASSY CLUTCH	1	SV650X/Y
8-2	57500-10D80	LEVER ASSY CLUTCH	1	SV650SX/SY E28
9	57620-27A31	LEVER	1	
10	57531-14A00	SCREW BRAKE LEVER PIVOT	1	
11	08319-21063	NUT	1	
12	08322-01063	WASHER	1	
13	57441-11010	ADJUSTER CABLE	1	
14	57442-11010	NUT CABLE ADJUSTER	1	
15	01500-06203	BOLT	1	
16	57061-45C00	COVER CLUTCH LEVER	1	

FIG.31

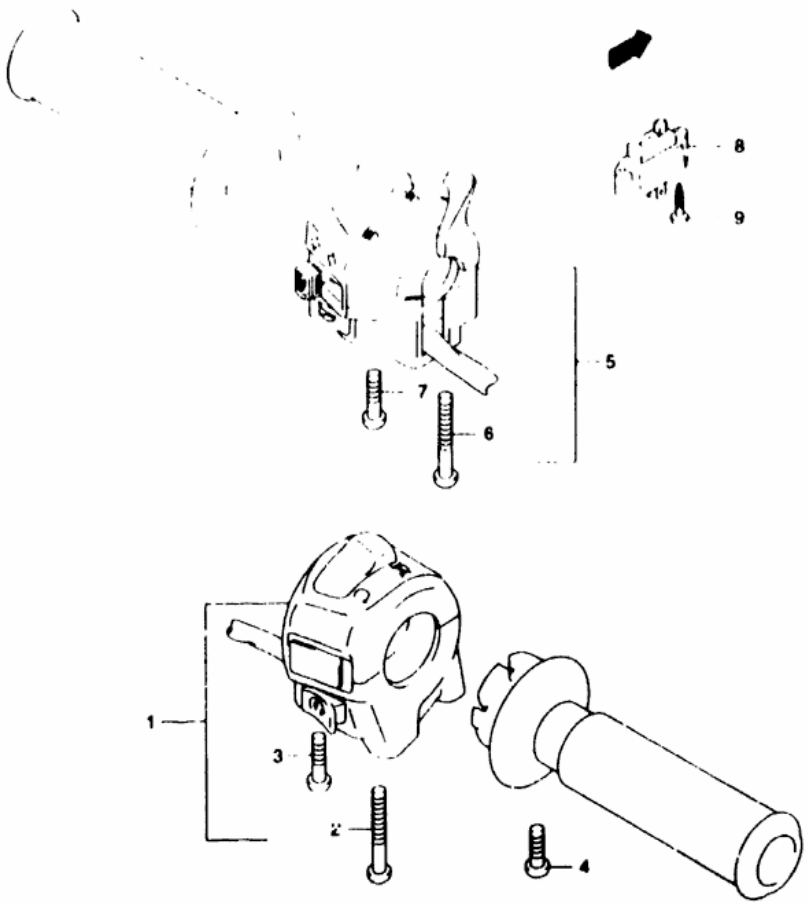

FIG 31 (F-11) HANDLE SWITCH (SV650X/Y)

REF.NO.	PART NO.	DESCRIPTION	Q'TY	REMARKS
1	37200-27E31	SWITCH ASSY HANDLE RH	1	
2	02112-05505	SCREW	1	
3	02112-05305	SCREW	1	
4	02112-05103	SCREW THROTTLE CABLE	1	
5	37400-23E30	SWITCH ASSY HANDLE LH	1	
6	02112-05455	SCREW	1	
7	09125-05066	SCREW (5x25)	1	
8	37560-38A00	SWITCH ASSY CLUTCH	1	
9	37564-26E00	SCREW	2	

REFER TO FIG 31A(F-12) FOR [illegible] E2R

FIG.31A

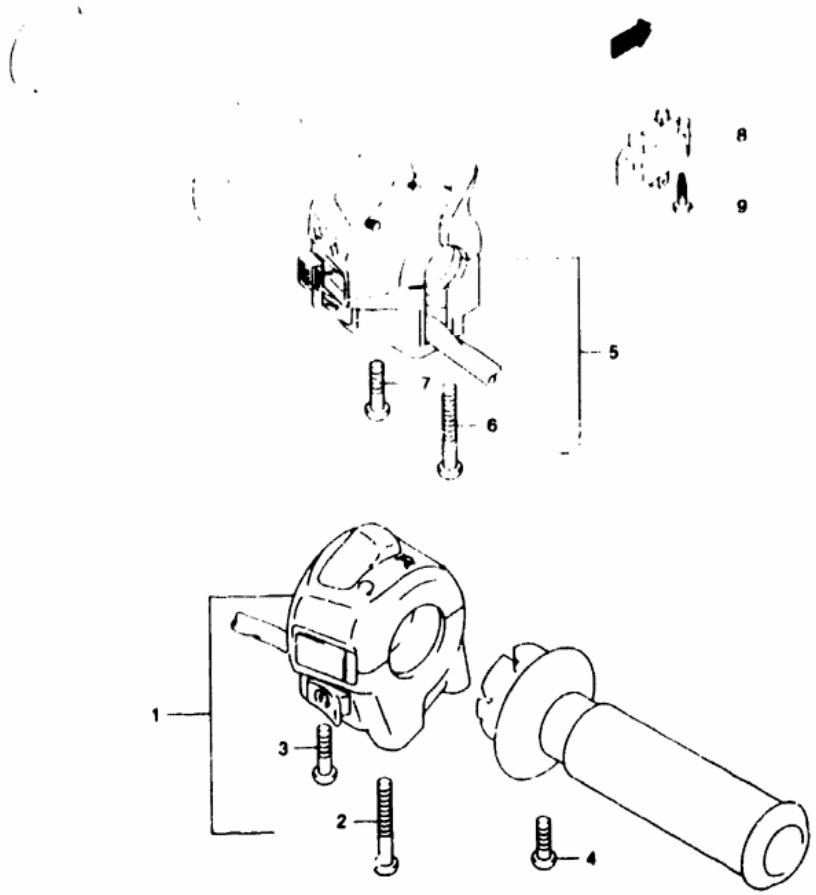

FIG 31A(F-12) HANDLE SWITCH (SV650SX/SY E28)

REF.NO.	PART NO.	DESCRIPTION	Q'TY	REMARKS
1	37200-33E31	SWITCH ASSY HANDLE RH	1	
2	02112-05505	SCREW	1	
3	02112-05305	SCREW	1	
4	02112-05103	SCREW THROTTLE CABLE	1	
5	37400-26E31	SWITCH ASSY HANDLE LH	1	
6	02112-05455	SCREW	1	
7	09125-0506S	SCREW (5x25)	1	
8	37560-38A00	SWITCH ASSY CLUTCH	1	
9	37564-[illegible]E00	SCREW	2	

FIG.23

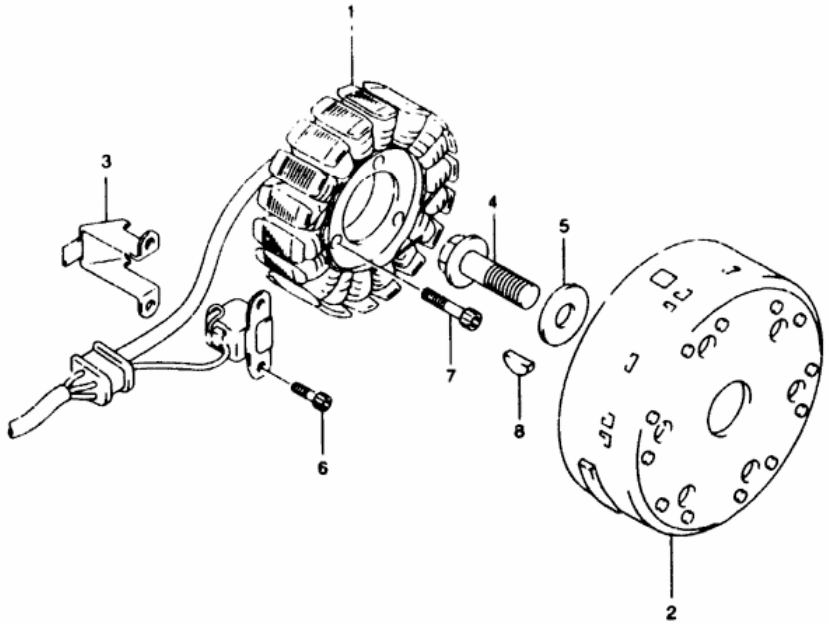

FIG 23 (E-3) MAGNETO

REF.NO.	PART NO.	DESCRIPTION	Q'TY	REMARKS
1	32101-19F00	STATOR ASSY	1	
2	32102-20F00	ROTOR ASSY	1	
3	32371-19F00	CLAMP MAGNETO LEAD	1	
4	09103-12004	BOLT (12X40)	1	
5	09160-12036	WASHER (12X30X3)	1	
6	07130-05123	BOLT	2	
7	07130-05303	BOLT	3	
8	09420-04008	KEY	1	

AIR CLEANER..... C-08
BATTERY..... E-04
CAM CHAIN..... C-04
CAM SHAFT / VALVE.. C-03
CRANKCASE COVER.... B-07
CRANKCASE..... B-05
CRANKSHAFT..... B-08
CYLINDER..... B-04
FRONT BRAKE HOSE... I-07
FRONT CALIPER..... I-06
FRONT CYLINDER HEAD B-02
FRONT FENDER..... G-11
GEAR SHIFTING..... D-12
HANDLE BAR..... H-02
HANDLE LEVER..... H-04
HANDLE SWITCH..... G-11
OPTIONAL..... J-07
RADIATOR HOSE..... D-07
RADIATOR..... D-06
REAR CALIPER..... J-05
REAR WHEEL..... J-04
SEAT TAIL COVER.... H-11
SEAT..... H-10
SPEEDOMETER..... F-02
TRANSMISSION..... D-10
TURNSIGNAL LAMP.... F-06
WARNING LABEL..... H-09
WATER PUMP..... D-04

FIG.13

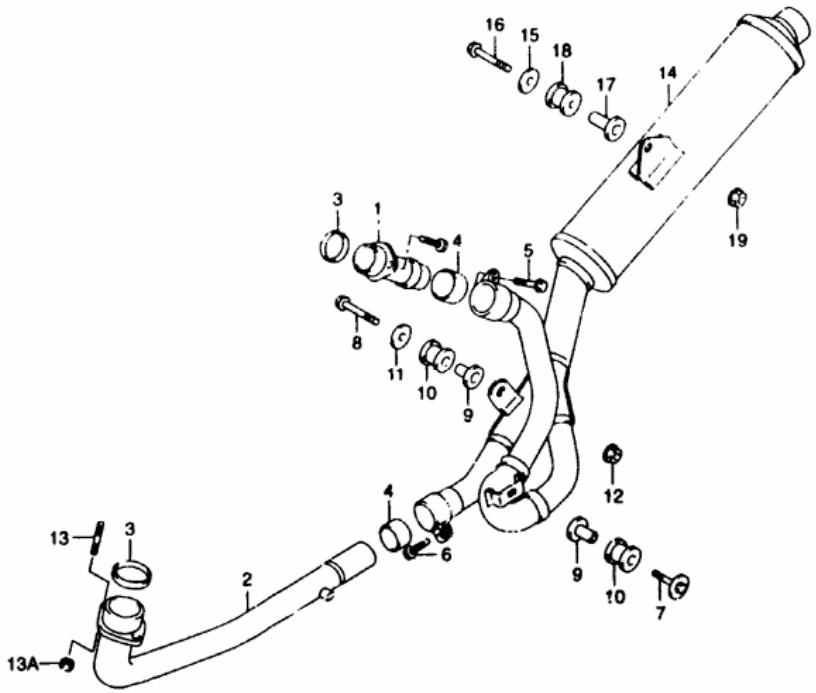

FIG 13 (D- 2) MUFFLER

REF.NO.	PART NO.	DESCRIPTION	Q'TY	REMARKS
1	14150-19F00	PIPE, EXHAUST REAR	1	
2	14160-19F10	PIPE, EXHAUST FRONT	1	
3	14181-22D01	GASKET, EXHAUST PIPE	2	
4	14771-32E00	CONNECTOR, MUFFLER	2	
5	07120-08403	BOLT	1	
6	07120-08403	BOLT	1	
7	09118-08068	BOLT (8X40)	1	
8	01550-08457	BOLT	1	
9	09180-08152	SPACER (8 6X12X24 2)	2	
10	09320-12048	CUSHION	2	
11	09160-08138	WASHER (8 5X30X2 3)	1	
12	08361-25088	NUT	1	
13	01421-08253	BOLT, STUD (8X25)	4	
13A	[illegible]-31087	NUT	4	
14	[illegible]-19F11-H01	MUFFLER	1	
15	09160-08140	WASHER (8 5X33X2 6)	1	
16	01550-08457	BOLT	1	
17	09180-08156	SPACER (8 6X12X25 5)	1	
18	09320-12049	CUSHION	1	
19	083[illegible]-[illegible]5088	NUT	1	

AIR CLEANER..... C-08
BATTERY..... E-04
CAM CHAIN..... C-04
CAM SHAFT / VALVE.. C-03
CARBURETOR FITTINGS C-07
CRANKCASE COVER.... B-07
CRANKCASE..... B-05
CRANKSHAFT..... B-08
CYLINDER..... B-04
ELECTRICAL..... E-05
FRONT BRAKE HOSE... I-07
FRONT CALIPER..... I-06
FRONT CYLINDER HEAD B-02
FRONT FENDER..... G-11
FRONT FORK DAMPER.. I-02
GEAR SHIFTING..... D-12
HANDLE BAR..... H-02
HANDLE LEVER..... H-04
HANDLE SWITCH..... F-11
HEADLAMP HOUSING... G-10
OPTIONAL..... J-07
RADIATOR HOSE..... D-07
RADIATOR..... D-06
REAR CALIPER..... J-05
REAR CUSHION LEVER. J-03
REAR WHEEL..... J-04
SEAT TAIL COVER.... H-11
SEAT..... H-10
SPEEDOMETER..... F-02
STAND..... G-03
TRANSMISSION..... D-10
TURNSIGNAL LAMP.... F-06
WARNING LABEL..... H-09
WATER PUMP..... D-04
WIRING HARNESS..... F-09

FIG.14

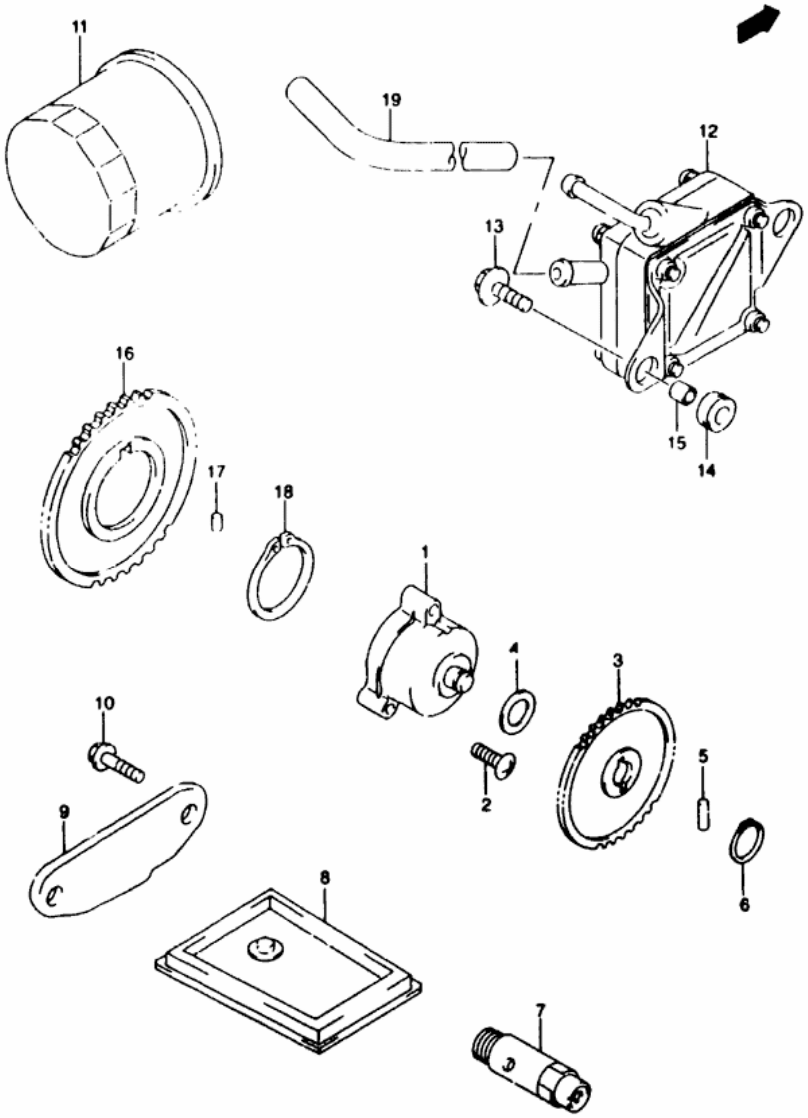

FIG.14 (D- 3) OIL PUMP / FUEL PUMP

REF.NO.	PART NO.	DESCRIPTION	Q'TY	REMARKS
1	16400-20F00	PUMP ASSY, ENGINE OIL	1	
2	02112-06253	SCREW	3	
3	16331-48E00	GEAR, OIL PUMP DRIVEN (NT 34)	1	
4	09181-10158	SHIM	1	
5	09261-04009	PIN (4X15 8)	1	
6	08331-31106	CIRCLIP	1	
7	16440-17C20	VALVE ASSY, OIL RELIEF	1	
8	16520-32E00	STRAINER, ENGINE OIL	1	
9	16523-48E00	CAP, OIL STRAINER	1	
10	01547-06123	BOLT	2	
11	16510-34E00	FILTER ASSY, ENGINE OIL	1	
12	15100-19F00	PUMP ASSY, FUEL	1	
13	09116-06115	BOLT, FUEL PUMP	2	
14	09320-09036	CUSHION, FUEL PUMP	2	
15	09180-06257	SPACER, FUEL PUMP	2	
16	16321-19F00	GEAR, ENGINE OIL PUMP DRIVE	1	
17	09261-06002	ROLLER (OD 6,L 6)	1	
18	08331-31383	CIRCLIP	1	
19	09355-50105-600	HOSE, VACUUM	1	L 600 +150

AIR CLEANER..... C-08
BATTERY..... E-04
CRANKCASE COVER.... B-07
CRANKCASE..... B-05
FRONT BRAKE HOSE... I-07
FRONT CALIPER..... I-06
GEAR SHIFTING..... D-12
HANDLE BAR..... H-02
OPTIONAL..... J-07
RADIATOR HOSE..... D-07
REAR WHEEL..... J-04
SEAT TAIL COVER.... H-11
TRANSMISSION..... D-10
TURNSIGNAL LAMP.. F-06

FIG.61

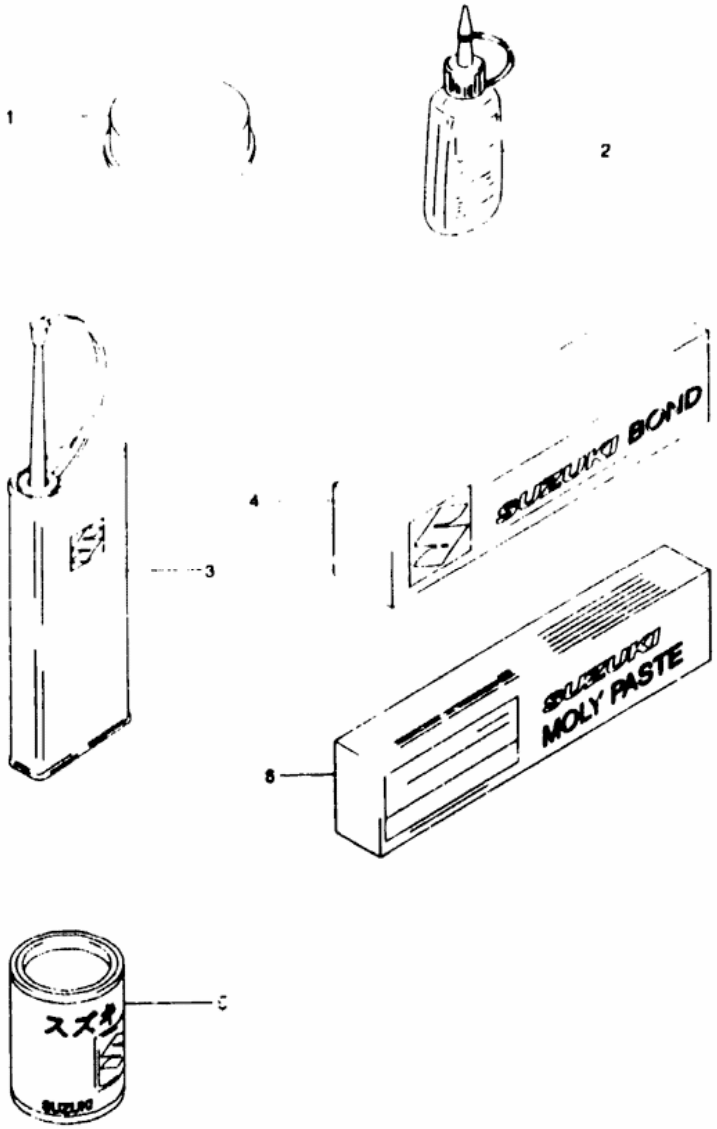

FIG 61 (J-7) OPTIONAL

REF.NO.	PART NO.	DESCRIPTION	Q'TY	REMARKS
1	99000-25110	SUZUKI PBC GREASE	1	80G
2-1	99104-32020	THREAD LOCK SUPER (1361A)	1	50G
2-2	99104-32030	THREAD LOCK SUPER (1363A)	1	50G
2-3	99000-32050	THREAD LOCK SUPER (1342)	1	50G
2-4	99000-32100	THREAD LOCK SUPER (1305)	1	50G
2-5	99000-32130	THREAD LOCK SUPER (1360)	1	50G
3	99000-32040	THREAD LOCK CEMENT	1	200G
4-1	99000-31140	SUZUKI BOND (1207B) BLACK	1	100G
4-2	99000-31110	SUZUKI BOND (1215)	1	100G
5	99000-25030	SUZUKI SUPER GREASE	1	100G
6	99000-25140	SUZUKI MOLY PASTE	1	[illegible]

FIG.16

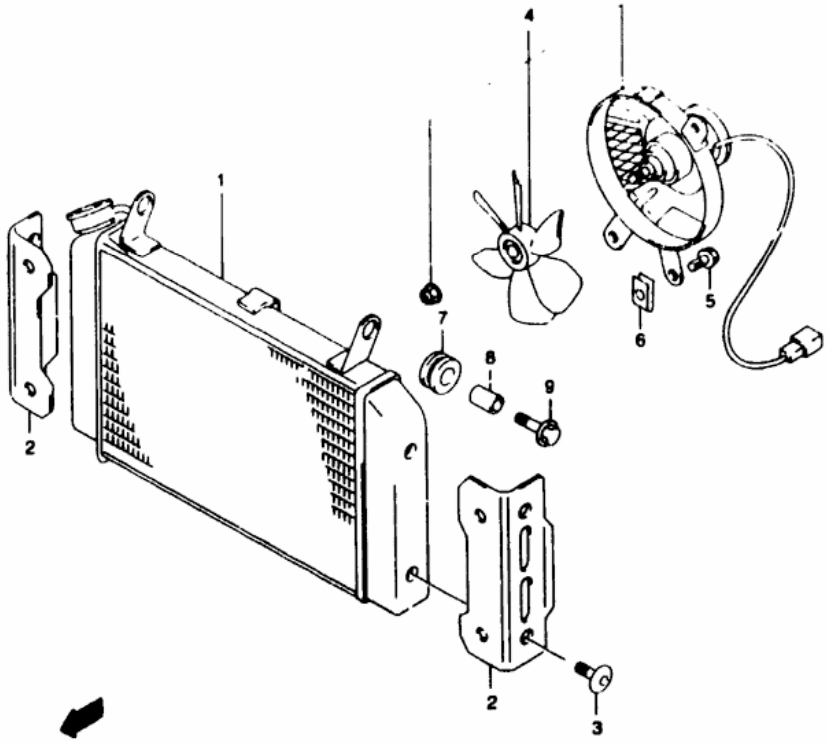

FIG 16 (D- 6) RADIATOR

REF.NO.	PART NO.	DESCRIPTION	Q'TY	REMARKS
1-1	17710-19F10	RADIATOR ASSY. WATER	1	SV650X/Y
1-2	17710-19F00	RADIATOR ASSY. WATER	1	SV650SX/SY E28
2	17761-19F00	COVER, RADIATOR	2	SV650X/Y
3	09139-06027	SCREW (6X12)	4	SV650X/Y
4	17800-19F10	FAN ASSY. RADIATOR	1	
5	01550-06103	BOLT	3	
6	09148-06015	NUT	3	
7	09320-10042	CUSHION	3	
8	09180-06290	SPACER (6.5X10X12)	3	
9	09118-06097	BOLT (6X25)	3	

AIR CLEANER..... C-08
BATTERY..... E-04
CRANKCASE COVER.... B-07
CRANKCASE..... B-05
FRONT BRAKE HOSE... I-07
FRONT CALIPER..... I-06
GEAR SHIFTING..... D-12
HANDLE BAR..... H-02
OPTIONAL..... J-07
RADIATOR HOSE..... D-07
REAR WHEEL..... J-04
SEAT TAIL COVER.... H-11
TRANSMISSION..... D-10
TURNSIGNAL LAMP.... F-06

FIG.17

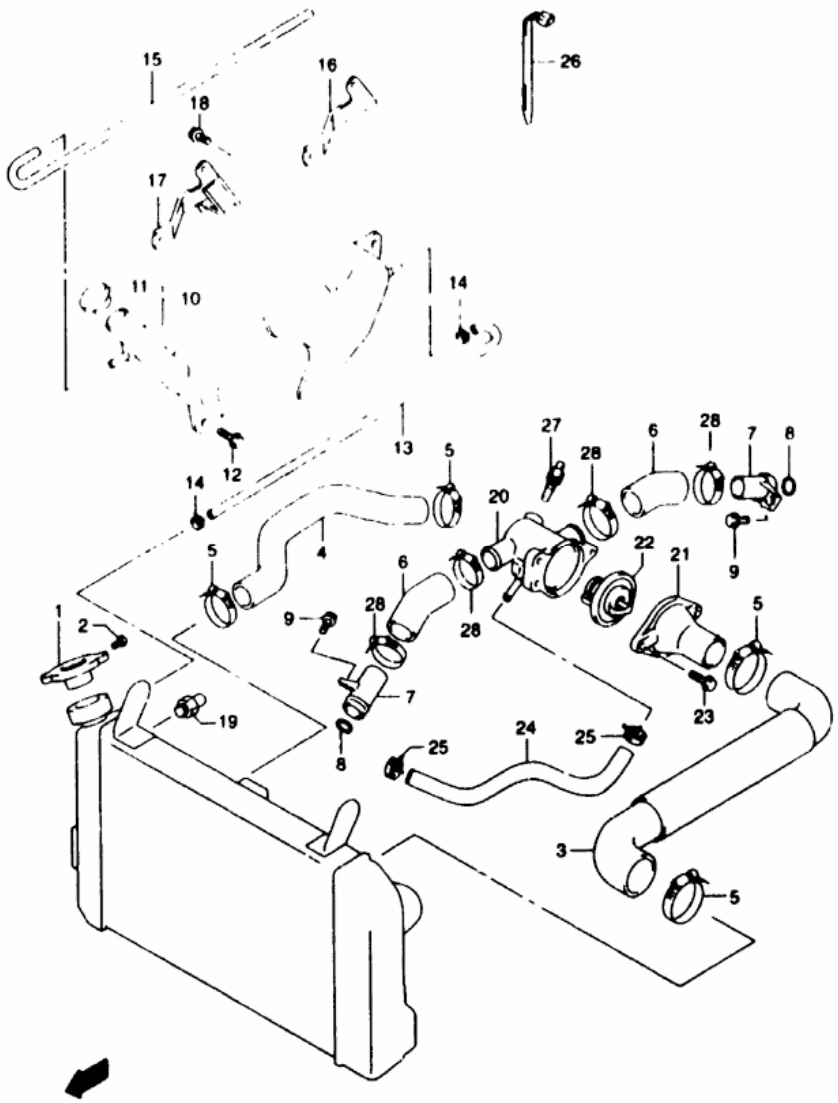

FIG 17 (D- 7) RADIATOR HOSE

REF.NO.	PART NO.	DESCRIPTION	Q'TY	REMARKS
1-1	17730-19D10	CAP, RADIATOR 1 1	1	SV650X
1-2	17730-19D11	CAP, RADIATOR 1 1	1	SV650Y
1-3	17730-12C20	CAP, RADIATOR	1	SV650SX/SY E28
2	17733-03D10	SCREW, RADIATOR CAP	1	SV650X/Y
3	17851-19F00	HOSE, RADIATOR INLET	1	
4	17852-19F00	HOSE RADIATOR OUTLET	1	
5	09402-38511	CLAMP	4	
6	17853-19F00	HOSE CONNECTOR INLET	2	
7	17890-02F00	UNION CONNECTOR HOSE	2	
8	09280-18009	O RING	2	
9	07130-06123	BOLT	2	
10	17910-19F00	TANK ASSY RESERVOIR	1	
11	17932-12C00	CAP RESERVOIR TANK	1	
12	01550-06163	BOLT	2	
13	17981-19F00	HOSE RESERVOIR TANK INLET	1	
14	09401-08411	CLIP	2	
15	09359-50901-980	HOSE RESERVOIR TANK OVERFLOW (L 980)	1	
16	17920-19F10	BRACKET, RESERVOIR TANK	1	SV650X/Y
17	17920-19F00	BRACKET, RESERVOIR TANK	1	SV650SX/SY E28
18	01550-06123	BOLT	1	
19	17680-24A20	SWITCH, RADIATOR FAN	1	
20	17662-19F01	CONNECTOR, THERMOSTAT INLET	1	
21	17663-02FA0	CAP, THERMOSTAT CONNECTOR	1	
22	17670-50F00	THERMOSTAT, WATER (82C)	1	
23	01550-06163	BOLT	2	
24	17856-19F00	HOSE, CONNECTOR TO WATER PUMP	1	
25	09401-12409	CLAMP	2	
26	09407-14403	CLAMP (L 140)	1	
27	34850-44D20	SENSOR, WATER TEMPERATURE	1	
28	09402-28511	CLAMP	4	

AIR CLEANER..... C-08
BATTERY..... E-04
CRANKCASE COVER.... B-07
CRANKCASE..... B-05
FRONT BRAKE HOSE... I-07
FRONT CALIPER..... I-06
GEAR SHIFTING..... D-12
HANDLE BAR..... H-02
OPTIONAL..... J-07
RADIATOR HOSE..... D-07
REAR WHEEL..... J-04
SEAT TAIL COVER.... H-11
TRANSMISSION..... D-10
TURNSIGNAL LAMP.... F-06

FIG.59

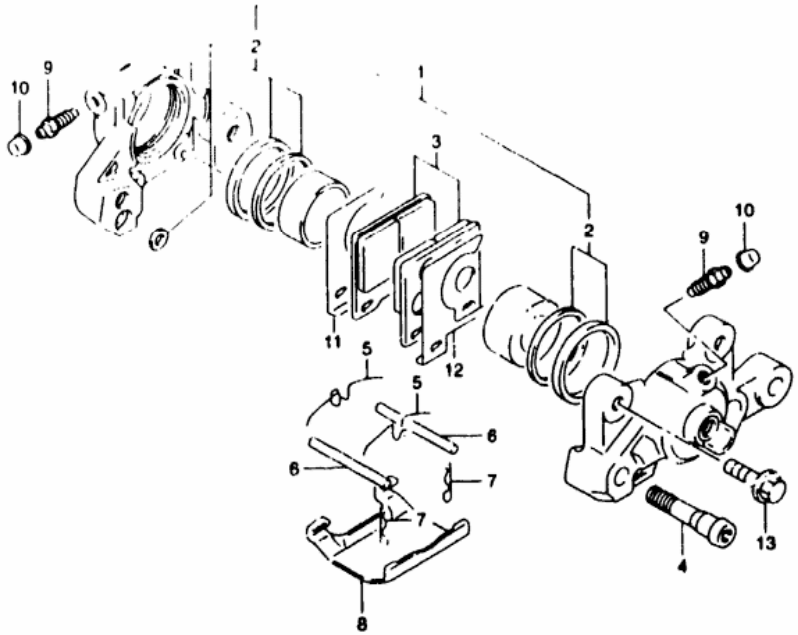

FIG.59 (J-5) REAR CALIPER

REF.NO.	PART NO	DESCRIPTION	Q'TY	REMARKS
	69100-05CD0	CALIPER ASSY. REAR	1	
1	69100-05850	PISTON SET	1	
2	69100-32820	SEAL SET PISTON	1	
3	69100-21820	PAD SET	1	
4	59145-05C50	BOLT	2	
5	59143-16700	SPRING	2	
6	69141-45000	PIN	2	
7	69142-45000	CLIP	2	
8	59151-16701	COVER	1	
9	59121-18410	BLEEDER	2	
10	55156-66310	CAP	2	
11	59371-20C00	SHIM INNER	1	
12	59381-20C00	SHIM OUTER	1	
13	01556-08303	BOLT	2	

FIG.57

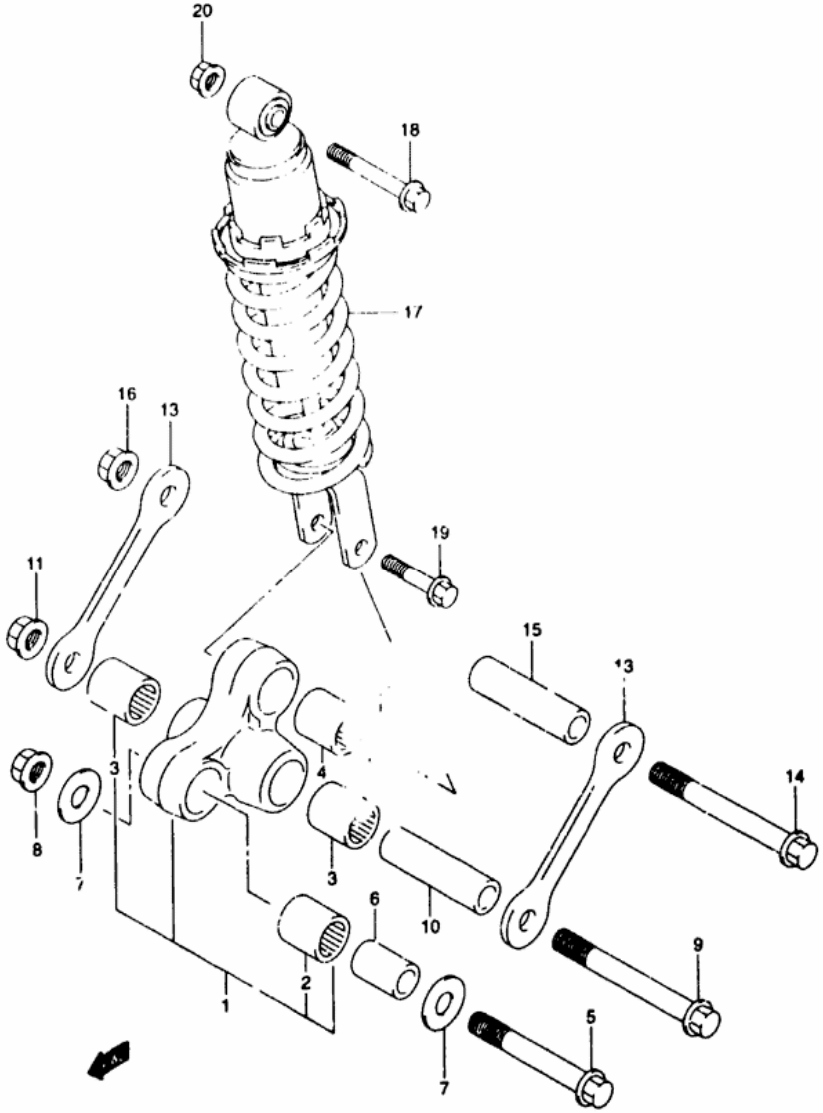

FIG.57 (J-3) REAR CUSHION LEVER

REF.NO.	PART NO.	DESCRIPTION	Q'TY	REMARKS
1	62600-19880	LEVER SET, REAR CUSHION	1	
2	09263-20073	BEARING, FRONT (20X27X30)	1	
3	09263-20071	BEARING, CENTER (20X27X23.5)	2	
4	09263-1703-	BEARING, REAR (17X24X26)	1	
5	62658-19F00	BOLT, FRONT (12X78)	1	
6	62684-12C00	SPACER, FRONT (12X20X32)	1	
7	09160-12037	WASHER	2	
8	08319-31128	NUT	1	
9	09103-12034	BOLT, CENTER (12X96)	1	
10	62626-19F00	SPACER, CENTER (12X20X68)	1	
11	08319-31128	NUT	1	
12	62684-40A10	SPACER, REAR (10X17X30)	1	
13	62641-20F00	ROD, REAR CUSHION	2	
14	09103-12034	BOLT, ROD (12X96)	1	
15	62626-19F00	SPACER, ROD (12X20X68)	1	
16	08319-31128	NUT	1	
17	62100-20F10-163	ABSORBER ASSY, REAR SHOCK (YELLOW)	1	SV650X/Y
18	09103-10033	BOLT, UPPER (10X70)	1	
19	09103-10126	BOLT, LOWER (10X48)	1	
20	08319-31107	NUT	1	

FIG.2

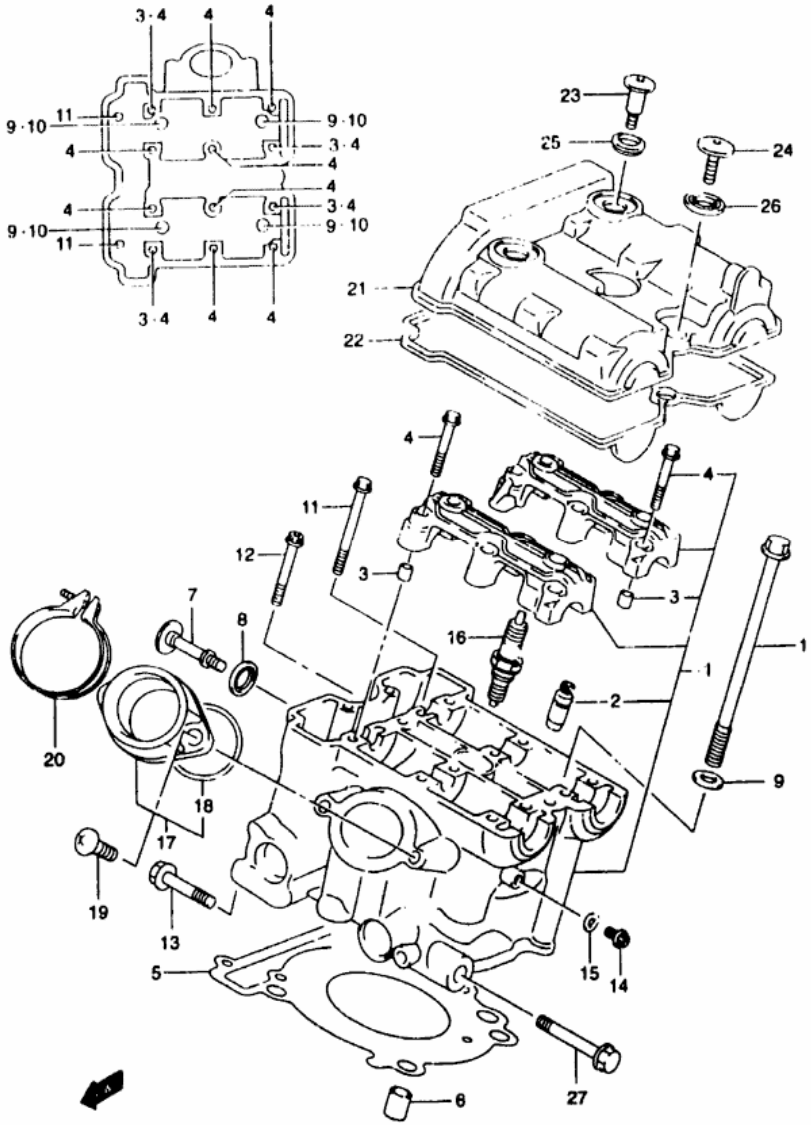

FIG.2 (B- 3) REAR CYLINDER HEAD

REF.NO.	PART NO.	DESCRIPTION	Q'TY	REMARKS
1-1	11103-20F00	HEAD ASSY, CYLINDER REAR	1	
1-2	11103-20F10	HEAD ASSY, CYLINDER REAR	1	E33
2	11115-18D72	GUIDE, VALVE	4	
3	09206-08001	PIN (6 2X8X11)	4	
4	09103-06026	BOLT (6X39)	12	
5	11141-20F00	GASKET, CYLINDER HEAD	1	
6	04211-13189	PIN	2	
7	11161-33E00	BOLT, CYLINDER HEAD SIDE FACE	1	
8	11191-13E00	WASHER, HEAD COVER	1	
9	09160-10082	WASHER (10 5X19X2 0)	4	
10	09103-10272	BOLT (10X160)	4	
11	09103-06103	BOLT (6X70)	2	
12	07120-06403	BOLT	1	
13	01550-10557	BOLT	1	
14	07120-06123	BOLT	1	
15	09166-06023	GASKET (5 8X13X1 2)	1	
16-1	09482-00456	SPARK PLUG (NGK,CR8E)	1	
16-2	09482-00457	SPARK PLUG (DENSO,U24ESR-N)	1	
16-3	09482-00458	SPARK PLUG (NGK,CR9E)	1	OPT
16-4	09482-00459	SPARK PLUG (DENSO,U27ESR-N)	1	OPT
16-5	09482-00460	SPARK PLUG (NGK,CR10E)	1	OPT
16-6	09482-00461	SPARK PLUG (DENSO,U31ESR-N)	1	OPT
17	13102-20F00	PIPE ASSY, INTAKE REAR	1	
18	09280-46006	O RING	1	
19	02122-06163	SCREW	2	
20	09402-56208	CLAMP	1	
21	11172-19F00	COVER, CYLINDER HEAD REAR	1	
22	11173-19F00	GASKET, CYLINDER HEAD COVER	1	
23	09106-07009	BOLT (7X17.5)	2	
24	09106-07010	BOLT (7X31)	1	
25	09161-11008	WASHER	2	
26	11192-13E00	CUSHION, HEAD COVER BOLT	1	
27	01550-10807	BOLT	1	

FIG.43

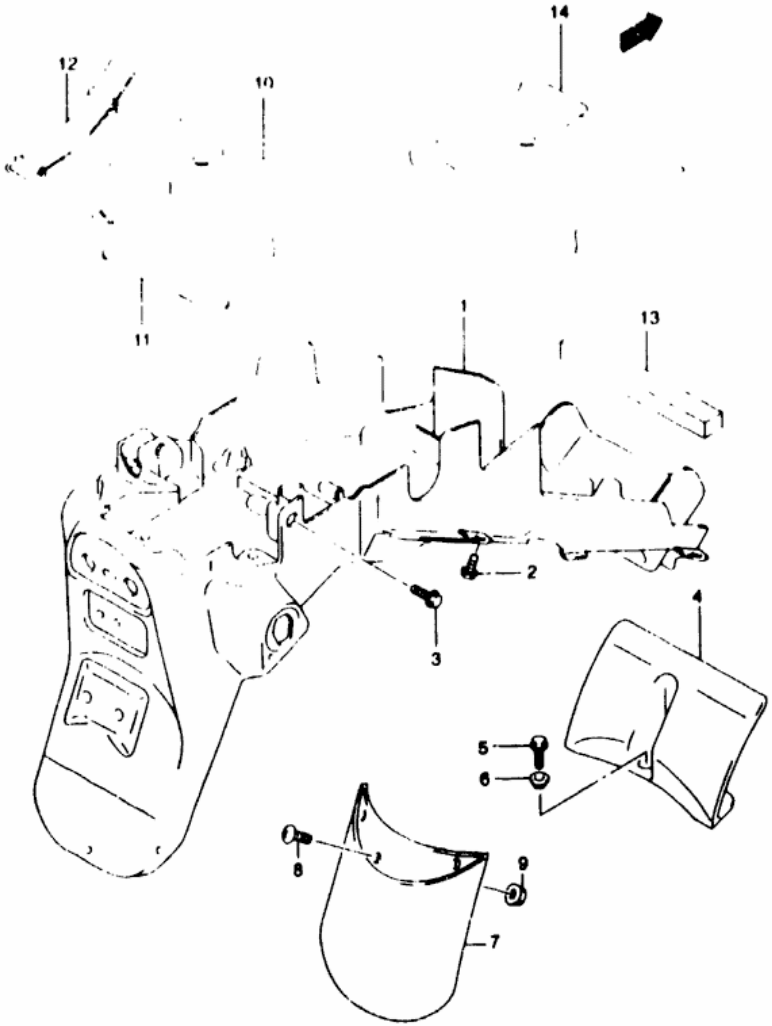

FIG 43 (H- 5) REAR FENDER

REF.NO.	PART NO.	DESCRIPTION	Q'TY	REMARKS
1	63111-19F30	FENDER, REAR	1	
2	09116-06165	BOLT	4	
3-1	09111-06066	BOLT	2	MODEL X
3-2	09113-06001	BOLT	2	MODEL Y
4	63421-19F00	MUD GUARD REAR FENDER FRONT	1	
5-1	01550-06163	BOLT	1	MODEL X
5-2	01162-06163	BOLT	1	MODEL Y
6	09169-06071	WASHER	1	
7	63[illegible]-19F10	EXTENSION REAR FENDER	1	
8	02142-06103	SCREW	3	
9	09146-06003	NUT	3	
10	09800-21008	TOOL ASSY	1	
11	09822-00005	CLAMP WRENCH	1	
12	47435-02F00	BAND TOOL	1	
13	47161-08F00	CUSHION	1	
14	94980-42A00	BAG MANUAL	1	

FIG.43

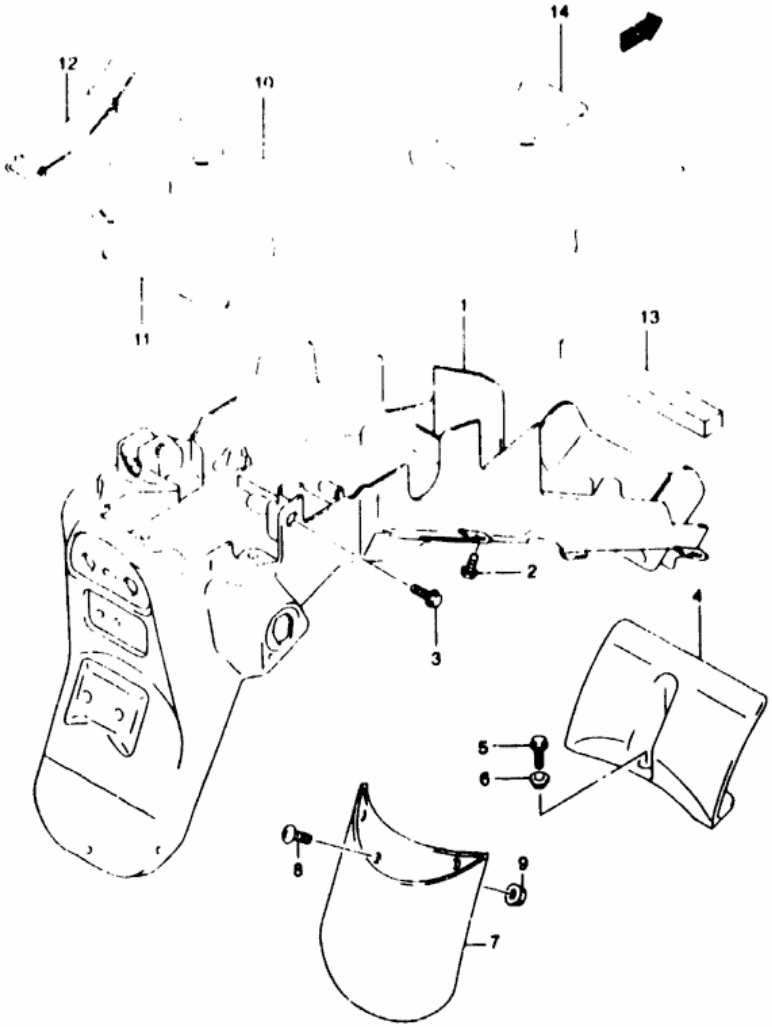

FIG 43 (H- 5) REAR FENDER

REF.NO.	PART NO.	DESCRIPTION	Q'TY	REMARKS
1	63111-19F30	FENDER, REAR	1	
2	09116-06165	BOLT	4	
3-1	09111-06066	BOLT	2	MODEL X
3-2	09113-06001	BOLT	2	MODEL Y
4	63421-19F00	MUD GUARD REAR FENDER FRONT	1	
5-1	01550-06163	BOLT	1	MODEL X
5-2	01162-06163	BOLT	1	MODEL Y
6	09169-06071	WASHER	1	
7	63[illegible]-19F10	EXTENSION REAR FENDER	1	
8	02142-06103	SCREW	3	
9	09146-06003	NUT	3	
10	09800-21008	TOOL ASSY	1	
11	09822-00005	CLAMP WRENCH	1	
12	47435-02F00	BAND TOOL	1	
13	47161-08F00	CUSHION	1	
14	94980-42A00	BAG MANUAL	1	

FIG.58

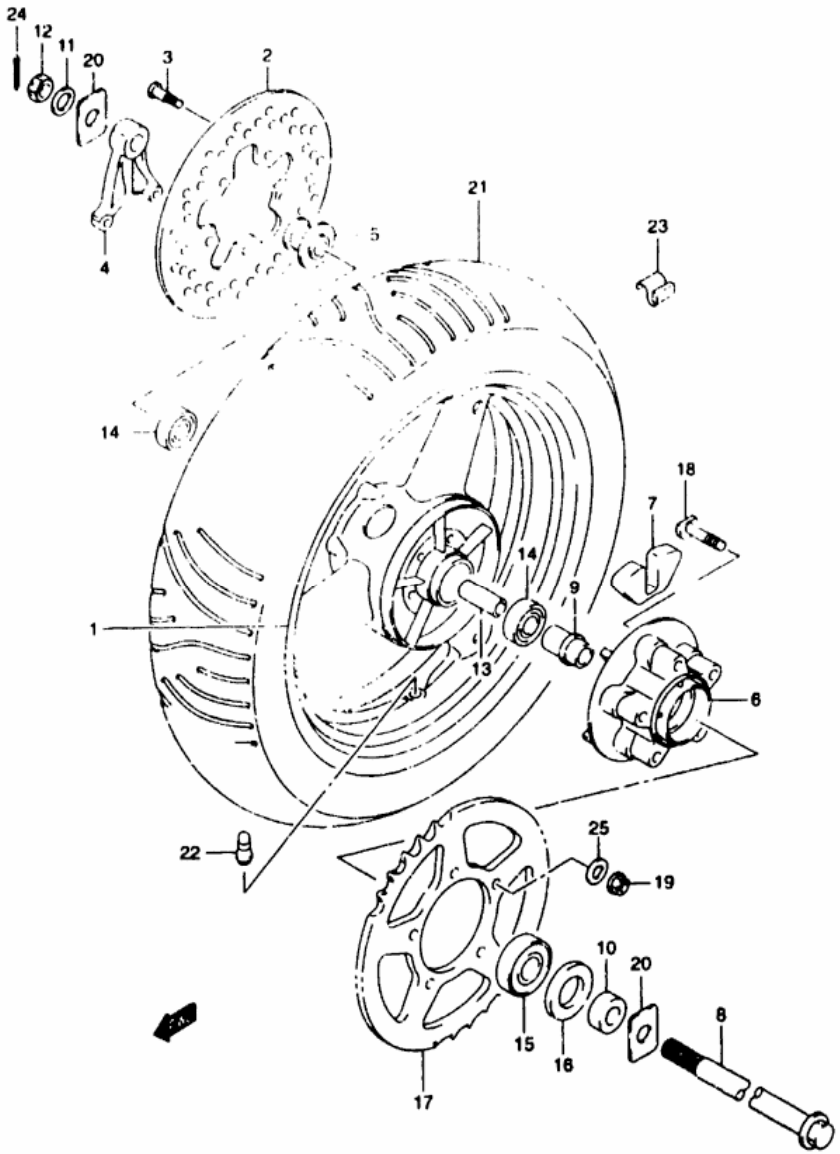

FIG 58 (J- 4) REAR WHEEL

REF.NO.	PART NO.	DESCRIPTION	Q'TY	REMARKS
1-1	64111-08F00-Y6G	WHEEL, REAR (17XMT4 50) (SILVER)	1	MODEL X
1-2	64111-08F00-12R	WHEEL, REAR (17XMT4 50) (SILVER)	1	MODEL Y
2	69211-21E00	DISC REAR BRAKE	1	
3	09106-08125	BOLT (8X33)	5	
4	69721-33D00	BRACKET REAR CALIPER	1	
5	64740-19C00	SPACER, REAR AXLE RH	1	
6	64611-19F00	DRUM SPROCKET MOUNTING	1	
7	64651-27A01	ABSORBER SHOCK REAR HUB	5	
8	64711-19F10	AXLE REAR	1	
9	64733-34C00	RETAINER, REAR SPROCKET DRUM	1	
10	64741-45D00	SPACER REAR AXLE LH	1	
11	09160-17050	WASHER	1	
12	09141-16007	NUT	1	
13	09180-17067	SPACER (17.5X25X88)	1	
14	08143-63037	BEARING	2	
15	09262-25073	BEARING (25X62X17)	1	
16	09285-35001	OIL SEAL (35X62X8)	1	
17	64511-32C00	SPROCKET, REAR (NT 45-525)	1	SV650X/Y
18	09119-10043	BOLT (10X47)	5	
19	08319-31107	NUT	5	
20	64712-33D00	WASHER, CHAIN ADJUSTER	2	
21	55110-20F00	TIRE, REAR, 160/60 ZR17(69W) (METZELER)	1	
22	43130-24A00	VALVE ASSY, WHEEL RIM (TR412)	1	
23-1	55411-00A00	BALANCER, WHEEL (10G)	0~3	
23-2	55412-00A01	BALANCER, WHEEL (20G)	0~3	
24	04111-40308	PIN, COTTER	1	
25	09160-10506	WASHER	5	

FIG.47

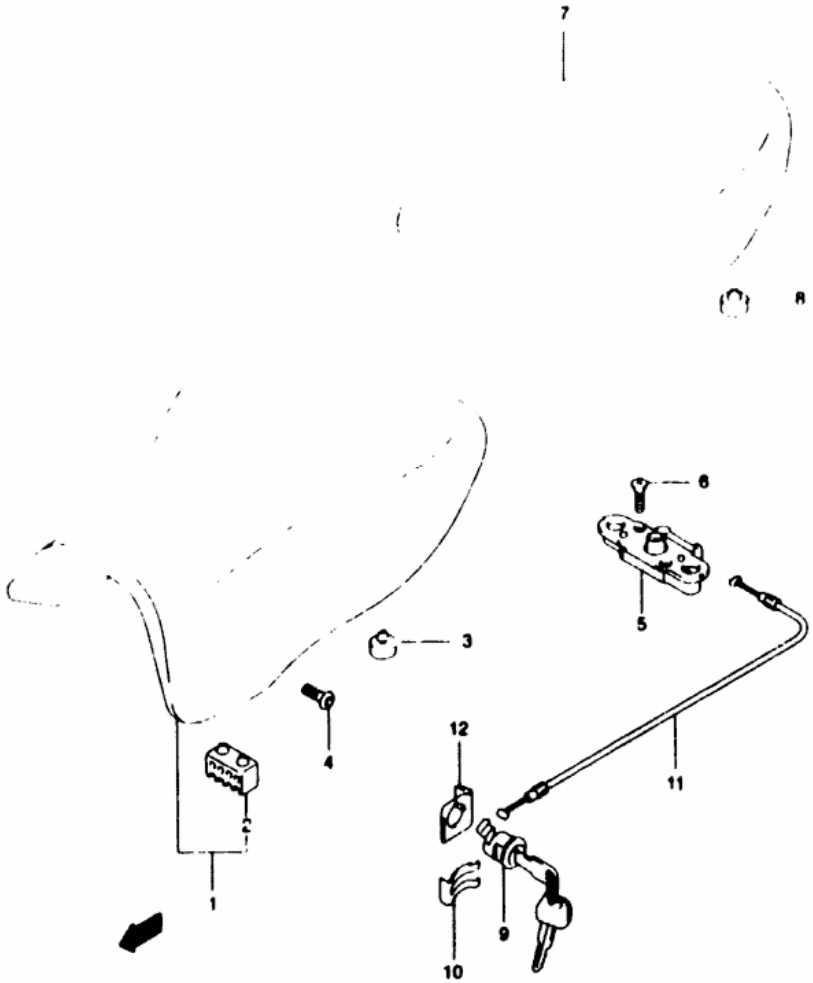

FIG 47 (H-10) SEAT

REF.NO.	PART NO.	DESCRIPTION	Q'TY	REMARKS
1	45100-19F50-W05	SEAT ASSY (BLACK)	1	
2	45149-31300	CUSHION	1	
3	09321-10002	CUSHION	2	
4	09106-06064	BOLT (6X18)	2	
5	45220-20A01	BRACKET SEAT SUPPORT REAR	1	
6	02122-06303	SCREW	2	
7	45300-19F50-W05	SEAT ASSY PILLION (BLACK)	1	
8	09321-10011	CUSHION	2	
9	95700-14810	LOCK SET SEAT	1	
10	45289-11F00	PLATE SEAT LOCK	1	
11	45280-38400	CABLE SEAT LOCK	1	
12	45288-14F00	GUIDE SEAT LOCK CABLE	1	

AIR CLEANER..... C-08
BATTERY..... E-04
CRANKCASE COVER.... B-07
CRANKCASE..... B-05
FRONT BRAKE HOSE... I-07
FRONT CALIPER..... I-06
GEAR SHIFTING..... D-12
HANDLE BAR..... H-02
OPTIONAL..... J-07
RADIATOR HOSE..... D-07
REAR WHEEL..... J-04
SEAT TAIL COVER.... H 11
TRANSMISSION..... D-10
TURNSIGNAL LAMP.... F-06

FIG.48

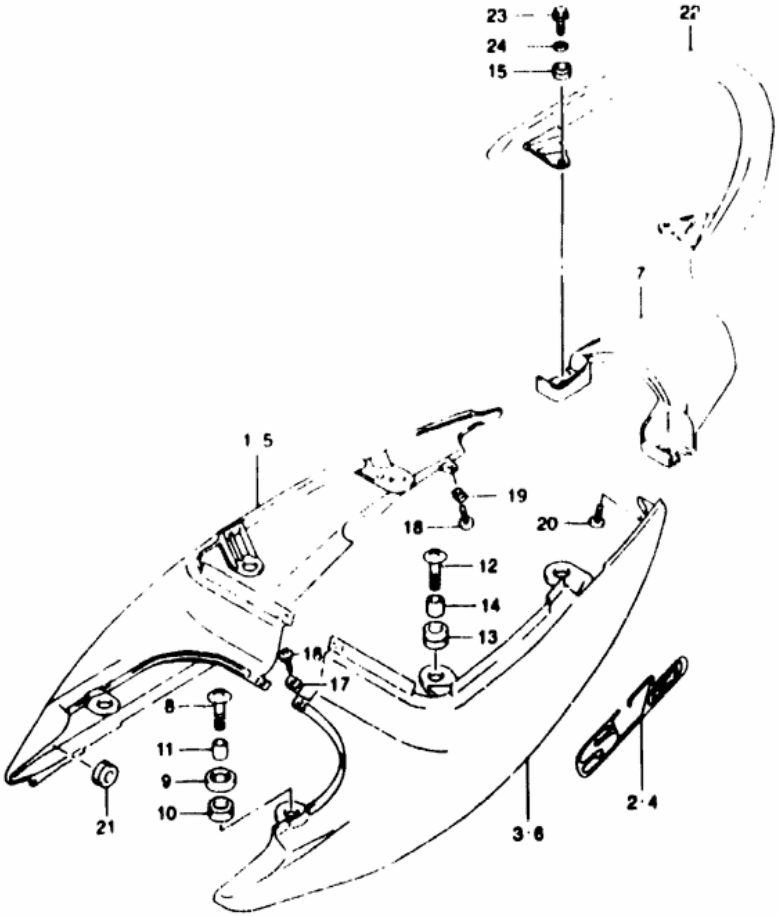

FIG 48 (H-11) SEAT TAIL COVER (MODEL X)

REF.NO.	PART NO.	DESCRIPTION	Q'TY	REMARKS
1-1	45501-20F00-Y7E	COVER, SEAT TAIL RH (BLUE)	1	SV650X
1-2	45501-20F00-Y7M	COVER, SEAT TAIL RH (RED)	1	SV650X
2-1	68165-20F00-N0J	EMBLEM TAIL COVER,SV650	1	FOR Y7E
2-2	68165-20F00-N0H	EMBLEM TAIL COVER SV650	1	FOR Y7M
3-1	45502-20F00-Y7E	COVER SEAT TAIL LH (BLUE)	1	SV650X
3-2	45502-20F00-Y7M	COVER SEAT TAIL LH (RED)	1	SV650X
4-1	68165-20F00-N0J	EMBLEM TAIL COVER SV650	1	FOR Y7E
4-2	68165-20F00-N0H	EMBLEM TAIL COVER SV650	1	FOR Y7M
5				NOT LISTED
6				NOT LISTED
7	45503-19F50-35W	COVER SEAT TAIL CENTER (GRAY)	1	
8	09136-06083	SCREW FRONT (6X30)	2	
[illegible]	47116-19F00	CUSHION FR UPPER (10X28X13)	2	
10	47115-19F00	CUSHION FR LOWER (10X22X15)	2	
[illegible]	09180-06294	SPACER (6.5X10X15.70)	2	
12	09136-06105	SCREW CENTER (6X20)	2	
[illegible]	09320-10045	CUSHION (10X28X19)	2	
14	09180-06266	SPACER (6.5X10X9.4)	2	
15	47115-05F00	CUSHION, REAR (15X28X12)	2	
16	03241-15123	SCREW	2	
17	09148-05038	NUT	2	
18	03241-15123	SCREW	2	
19	09148-05038	NUT	2	
20	03242-04103	SCREW	2	
21	09320-08018	CUSHION (8X26X7)	2	
22	46210-19F50-291	HANDLE, PILLION RIDER (BLACK)	1	
23	01810-08253	BOLT	2	
24	09160-08126	WASHER	2	

REFER TO FIG 49(H-12) FOR MODEL Y

FIG.49

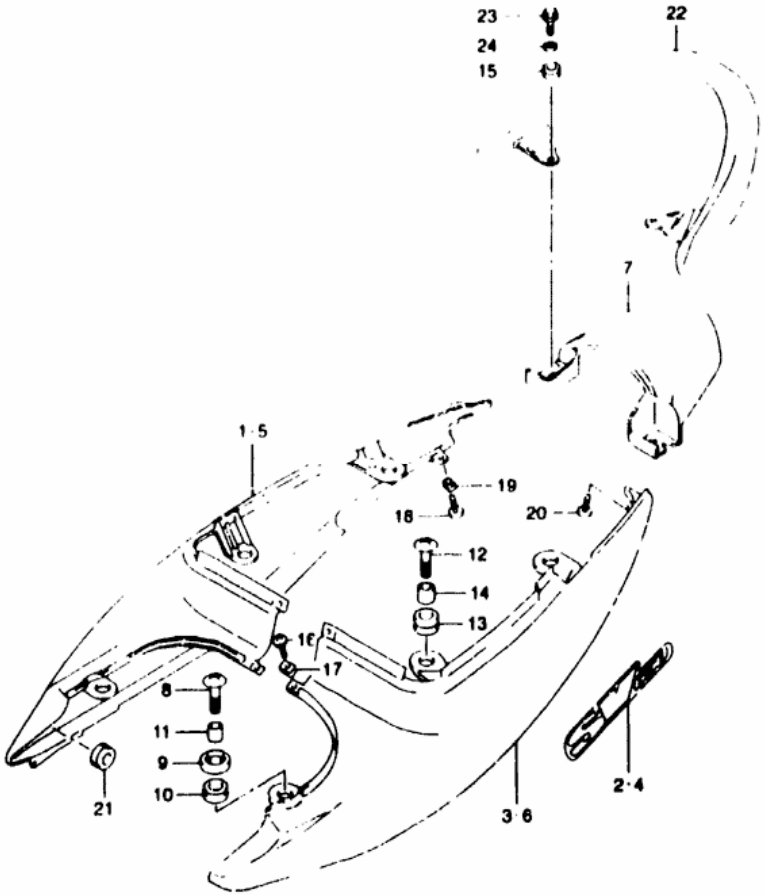

FIG 49 (H-12) SEAT TAIL COVER (MODEL Y)

REF.NO.	PART NO.	DESCRIPTION	Q'TY	REMARKS
1-1	45501-20F00-YC2	COVER, SEAT TAIL RH (BLUE)	1	SV650Y FOR YC2
1-2	45501-20F00-Z7X	COVER, SEAT TAIL RH (RED)	1	SV650Y FOR Y7M
2-1	68165-20F00-N9W	EMBLEM, TAIL COVER SV650	1	FOR YC2
2-3	68165-20F00-N9V	EMBLEM, TAIL COVER SV650	1	FOR Z7X
3-1	45502-20F00-YC2	COVER, SEAT TAIL LH (BLUE)	1	SV650Y FOR YC2
3-2	45502-20F00-Z7X	COVER, SEAT TAIL LH (RED)	1	SV650Y FOR Y7M
4-1	68165-20F00-N9W	EMBLEM, TAIL COVER SV650	1	FOR YC2
4-3	68165-20F00-N9V	EMBLEM, TAIL COVER SV650	1	FOR Z7X
5				NOT LISTED
6				NOT LISTED
7-1	45503-19F50-35W	COVER, SEAT TAIL CENTER (GRAY)	1	FOR YC2 Y7M Y9F
7-2	45503-19F50-YZL	COVER, SEAT TAIL CENTER (BLACK)	1	FOR YCL

AIR CLEANER..... C-08
BATTERY..... E-04
CRANKCASE COVER.... B-07
CRANKCASE..... B-05
FRONT BRAKE HOSE... I-07
FRONT CALIPER..... I-04
GEAR SHIFTING..... D-12
HANDLE BAR..... H-02
OPTIONAL..... J-07
RADIATOR HOSE..... D-07
REAR WHEEL..... J-04
SEAT TAIL COVER.... H-11
TRANSMISSION..... D-10
TURNSIGNAL LAMP.... F-06

FIG.12

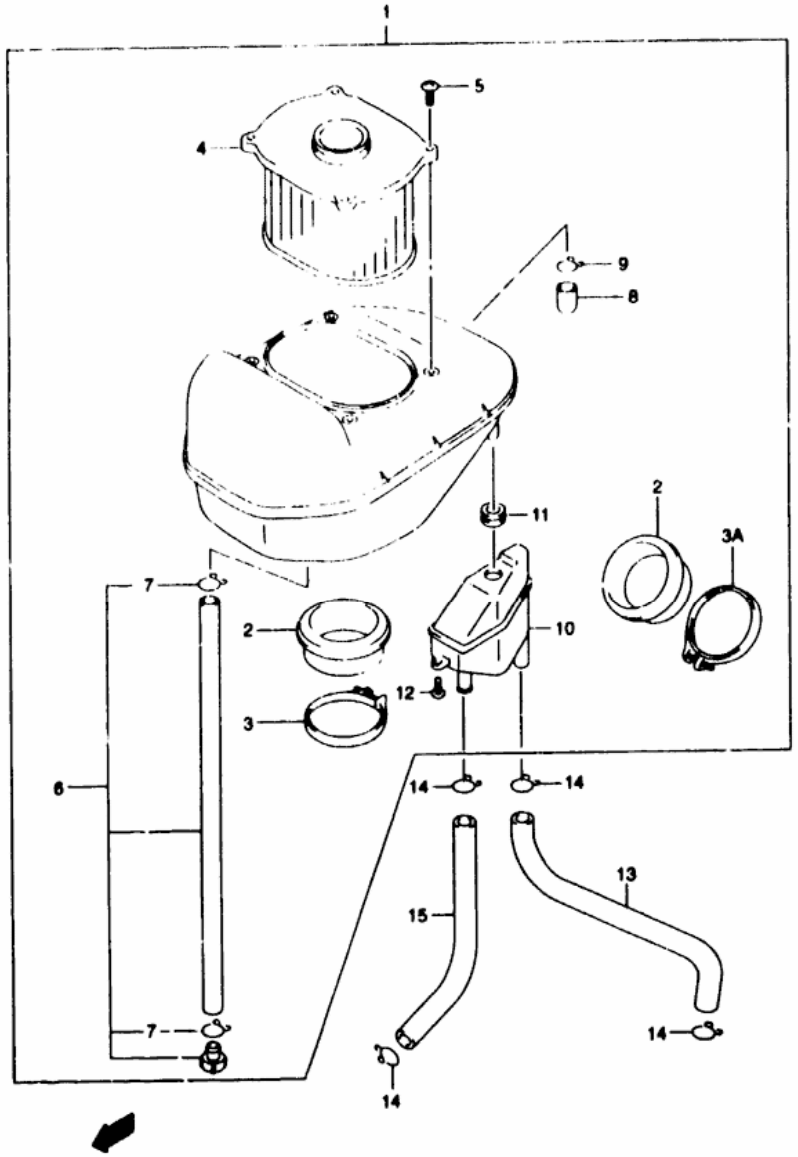

FIG 12 (C- 8) AIR CLEANER

REF.NO.	PART NO.	DESCRIPTION	Q'TY	REMARKS
1-1	13700-20F00	CLEANER ASSY, AIR	1	
1-2	13700-20F10	CLEANER ASSY, AIR	1	E33
2	13881-20F00	TUBE, OUTLET	2	
3	13170-20F10	CLAMP, OUTLET TUBE FRONT	1	
3A	13170-20F00	CLAMP, OUTLET TUBE REAR	1	
4	13780-20F00	FILTER, AIR CLEANER	1	
5	02142-05203	SCREW	4	
6-1	13870-19F00	TUBE DRAIN	1	
6-2	13870-20F10	TUBE, DRAIN	1	E33
7	09401-14301	CLIP	2	
8	13859-41B10	PLUG	1	EXCEPT E33
9	09401-14301	CLIP	1	EXCEPT E33
10	13840-20F00	TANK OIL RETURN	1	
11	09308-13001	GROMMET	1	
12	03142-05163	SCREW	2	
13	13851-20F00	TUBE, BREATHER CRANKCASE	1	
14	09401-15101	CLIP	4	
15	09355-11165-600	TUBE, BREATHER CYLINDER (11X16X600)	1	L 600 →220

AIR CLEANER..... C-08
BATTERY..... E-04
CAM CHAIN..... C-04
CAM SHAFT / VALVE.. C-03
CRANKCASE COVER.... B-07
CRANKCASE..... B-05
CRANKSHAFT..... B-08
CYLINDER..... B-04
FRONT BRAKE HOSE... I-07
FRONT CALIPER..... I-06
FRONT CYLINDER HEAD B-02
FRONT FENDER..... G-11
GEAR SHIFTING..... D-12
HANDLE BAR..... H-02
HANDLE LEVER..... F-04
HANDLE SWITCH..... F-11
OPTIONAL..... J-04
RADIATOR HOSE..... J-07
RADIATOR..... J-06
REAR CALIPER..... J-05
J-04
H-11
H-10
F-02
TRANSMISSION..... D-10
TURNSIGNAL LAMP.... F-06
WARNING LABEL..... H-09
WATER PUMP..... D-04

FIG.24

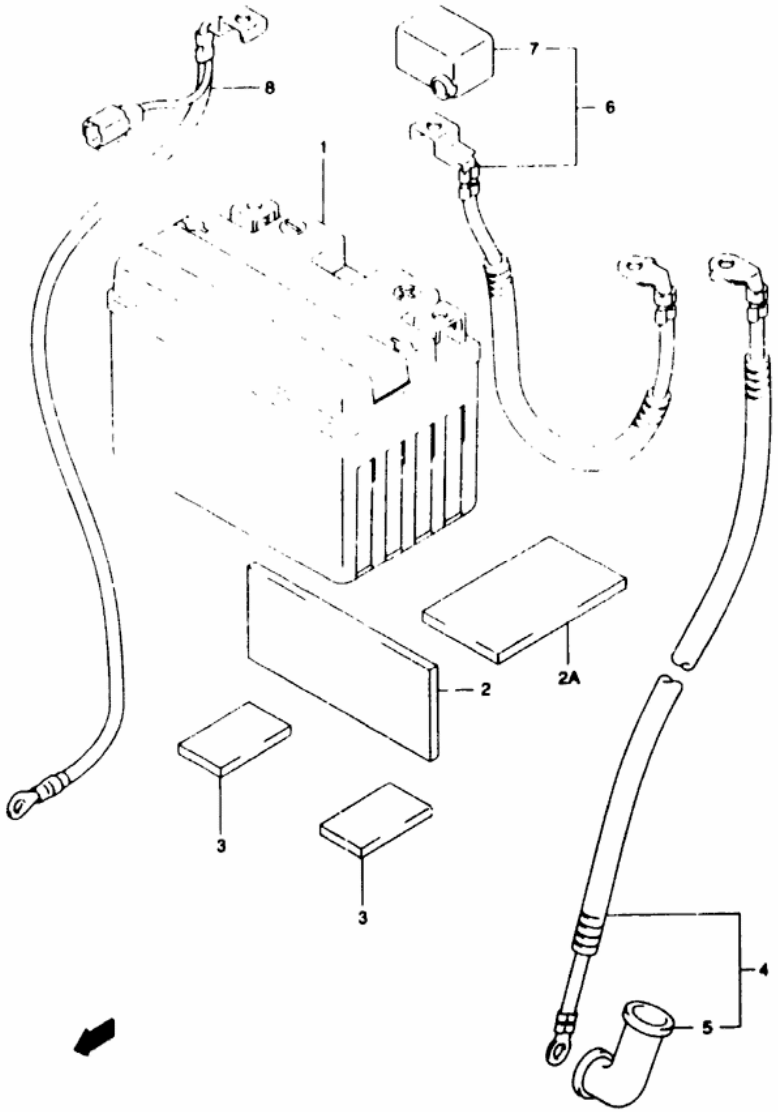

FIG 24 (E-4) BATTERY

REF.NO.	PART NO.	DESCRIPTION	Q'TY	REMARKS
1	33610-02F00	BATTERY ASSY (YT12A-BS 12V 10AH)	1	
2	33651-37000	PROTECTOR (170X95X3.0)	3	CUT AS REQUIRED PROFILE (115X50)
2A	33652-19F00	PROTECTOR (40X85X5)	1	
3	33652-28000	PROTECTOR BATTERY (20X45X6)	2	
4	33810-19F00	WIRE STARTER MOTOR LEAD	1	
5	31861-48B10	CAP STARTER MOTOR LEAD	1	
6	33820-19F00	WIRE BATTERY (+) LEAD	1	
7	33624-16E00	CAP BATTERY (+)	1	
8	33660-19F00	WIRE BATTERY (-) LEAD	1	

AIR CLEANER..... C-08 CRANKCASE COVER.... B-07 FRONT BRAKE HOSE... I-07 GEAR SHIFTING..... D-12 OPTIONAL..... J-07 REAR WHEEL..... J-04 TRANSMISSION..... D-10

FIG.9

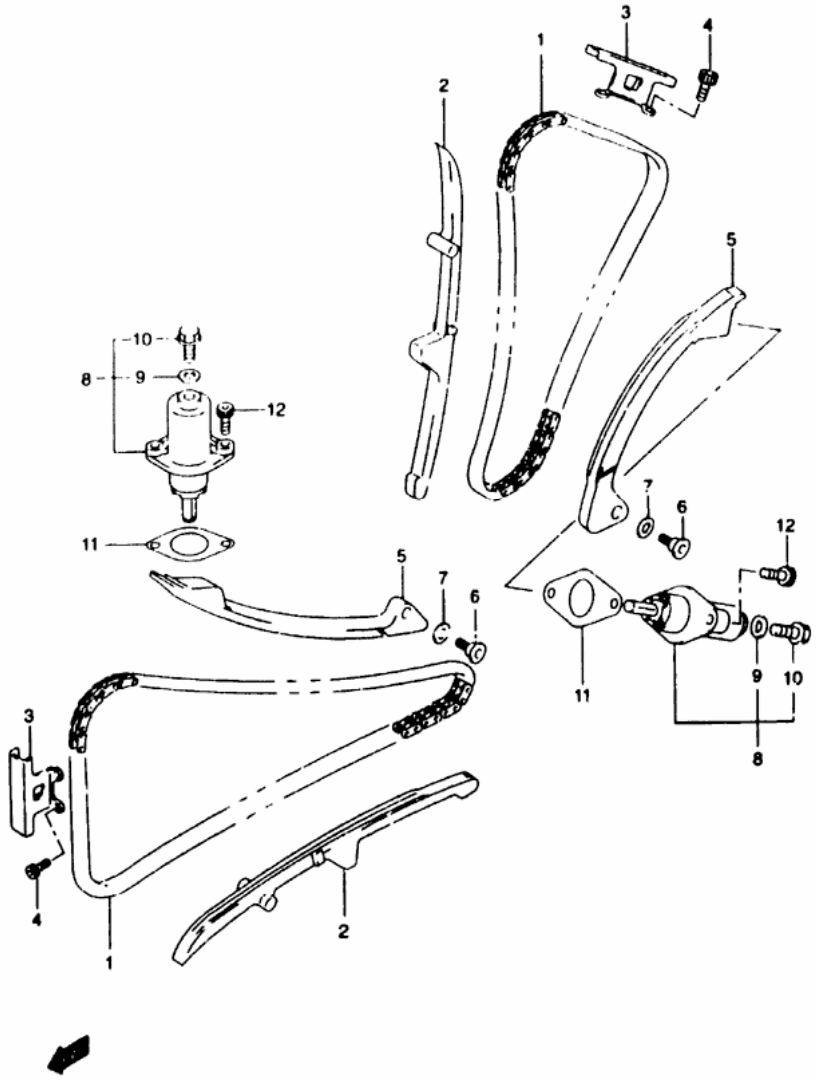

FIG.9 (C-4) CAM CHAIN

REF.NO.	PART NO.	DESCRIPTION	Q'TY	REMARKS
1	12760-19F00	CHAIN, CAM SHAFT DRIVE	2	
2	12771-19F00	GUIDE, CAM CHAIN NO 1	2	
3	12782-19F00	GUIDE, CAM CHAIN NO 2	2	
4	07130-06123	BOLT	6	
5	12811-19F00	TENSIONER, CAM CHAIN	2	
6	12812-35C00	BOLT, CAM CHAIN TENSIONER	2	
7	08211-06181	WASHER	2	
8	12830-19F10	ADJUSTER ASSY. TENSIONER	2	
9	12837-33E00	GASKET, TENSIONER ADJUSTER	2	
10	12834-33E00	PLUG, TENSIONER ADJUSTER	2	
11	12837-24A10	GASKET TENSIONER ADJUSTER	2	
12	07130-06253	BOLT	4	

FIG.8

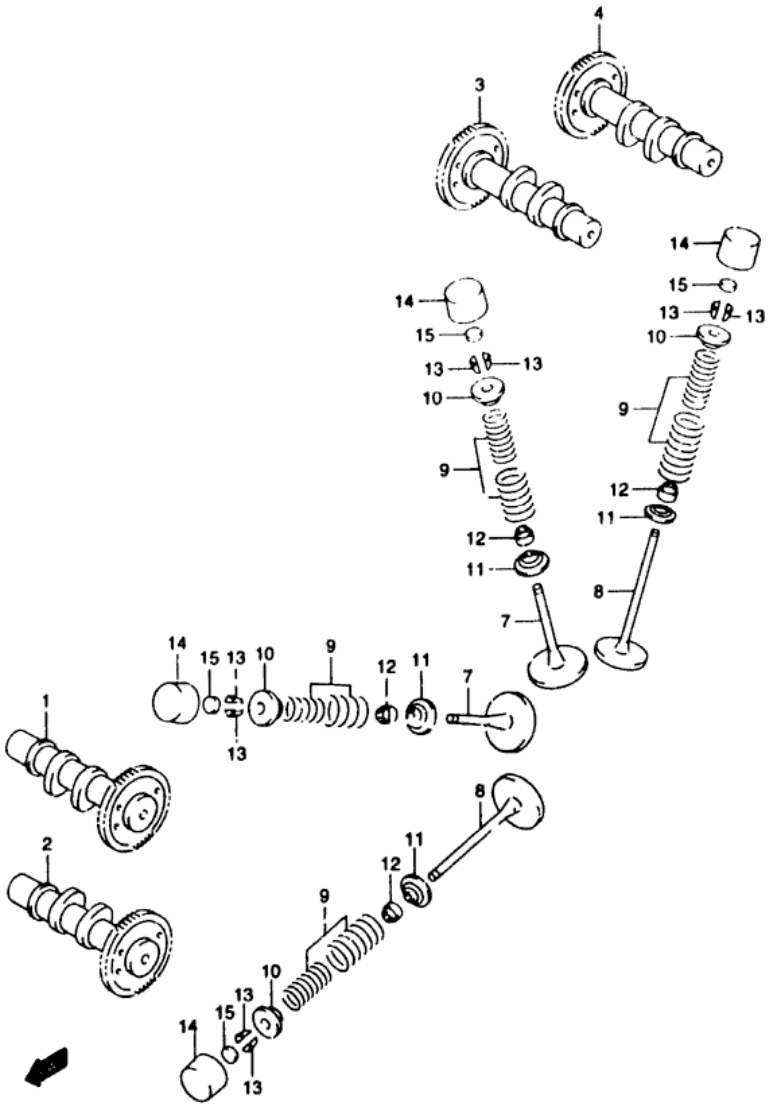

FIG.8 (C- 3) CAM SHAFT / VALVE

REF.NO.	PART NO.	DESCRIPTION	Q'TY	REMARKS
1	12710-20F00	CAM SHAFT, INTAKE FRONT	1	
2	12720-20F00	CAM SHAFT, EXHAUST FRONT	1	
3	12730-20F00	CAM SHAFT, INTAKE REAR	1	
4	12740-20F00	CAM SHAFT, EXHAUST REAR	1	
5	12800-05820	SHIM SET, TAPPET	1	OPT NOT SHOWN
6	99000-69491	CASE, TAPPET SHIM	1	
7	12911-46E00	VALVE, INTAKE	4	
8	12912-20F00	VALVE, EXHAUST	4	
9	12920-33E10	SPRING SET, VALVE	8	
10	12931-33E10	RETAINER VALVE SPRING	8	
11	12933-39E00	SEAT, VALVE SPRING	8	
12	09289-04002	OIL SEAL (4.5X10X8)	8	
13	12932-17E50	COTTER VALVE	16	
14	12891-17E00	TAPPET	8	
15-1	12892-05C00-120	SHIM, TAPPET (T 1.20)	8	
15-2	12892-05C00-125	SHIM, TAPPET (T 1.25)	8	
15-3	12892-05C00-130	SHIM, TAPPET (T 1.30)	8	
15-4	12892-05C00-135	SHIM, TAPPET (T 1.35)	8	
15-5	12892-05C00-140	SHIM, TAPPET (T 1.40)	8	
15-6	12892-05C00-145	SHIM, TAPPET (T 1.45)	8	
15-7	12892-05C00-150	SHIM, TAPPET (T 1.50)	8	
15-8	12892-05C00-155	SHIM, TAPPET (T 1.55)	8	
15-9	12892-05C00-160	SHIM, TAPPET (T 1.60)	8	
15-10	12892-05C00-165	SHIM, TAPPET (T 1.65)	8	
15-11	12892-05C00-170	SHIM, TAPPET (T 1.70)	8	
15-12	12892-05C00-175	SHIM, TAPPET (T 1.75)	8	
15-13	12892-05C00-180	SHIM, TAPPET (T 1.80)	8	
15-14	12892-05C00-185	SHIM, TAPPET (T 1.85)	8	
15-15	12892-05C00-190	SHIM, TAPPET (T 1.90)	8	
15-16	12892-05C00-195	SHIM, TAPPET (T 1.95)	8	
15-17	12892-05C00-200	SHIM, TAPPET (T 2.00)	8	
15-18	12892-05C00-205	SHIM, TAPPET (T 2.05)	8	
15-19	12892-05C00-210	SHIM, TAPPET (T 2.10)	8	
15-20	12892-05C00-215	SHIM, TAPPET (T 2.15)	8	
15-21	12892-05C00-220	SHIM, TAPPET (T 2.20)	8	

FIG.10

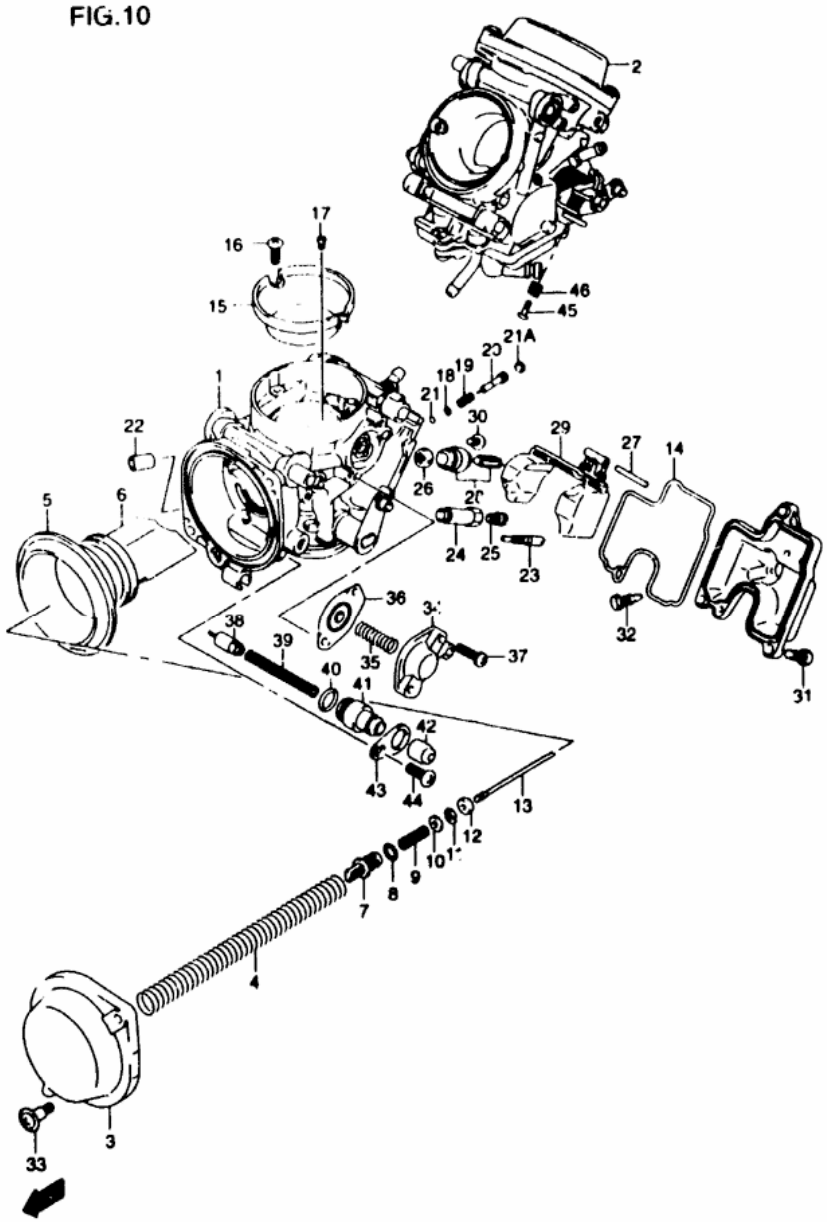

FIG 10 (C- 5) CARBURETOR

REF.NO.	PART NO.	DESCRIPTION	Q'TY	REMARKS
1-1	13201-20F20	CARBURETOR ASSY, FRONT	1	
1-2	13201-20F40	CARBURETOR ASSY, FRONT	1	E33
2-1	13202-20F20	CARBURETOR ASSY, REAR	1	
2-2	13202-20F40	CARBURETOR ASSY, REAR	1	E33
3	13502-07F00	COVER ASSY, DIAPHRAGM	2	
4	13481-19F00	SPRING	2	
5	13507-33E00	DIAPHRAGM	2	
6	13501-33E00	VALVE PISTON	2	
7	13418-33E00	HOLDER	2	
8	09280-05004	O RING (D 1 9 ID 4 8)	2	
9	13481-33E00	SPRING	2	
10	13382-44030	WASHER	2	
11	13394-17E60	E RING	2	
12	13387-33E00	RING	2	
13-1	13383-20F30	NEEDLE JET (6E42-54-1)	2	
13-2	13383-20F40	NEEDLE JET (6E43-54-1)	2	E33
14	13258-33E00	O RING	2	
15	13667-20F00	FUNNEL	2	
16	02112-04123	SCREW	4	
17-1	09493-32007	JET, PILOT AIR (160)	2	
17-2	09492-30013	JET, PILOT AIR (150)	2	E33
18	13291-29900	WASHER	2	
19	13268-48700	SPRING	2	
20	13279-19F10	ADJUSTER (2 3/4)	2	
21	13295-29900	O RING	2	
21A	13281-05A00	PLUG	2	
22	13508-17C00	CAP	1	FRONT
23	09492-15017	JET, PILOT (15)	2	
24	13385-33E00	HOLDER, JET	2	
25	09491-27014	JET, MAIN (137 5)	2	

FIG.10

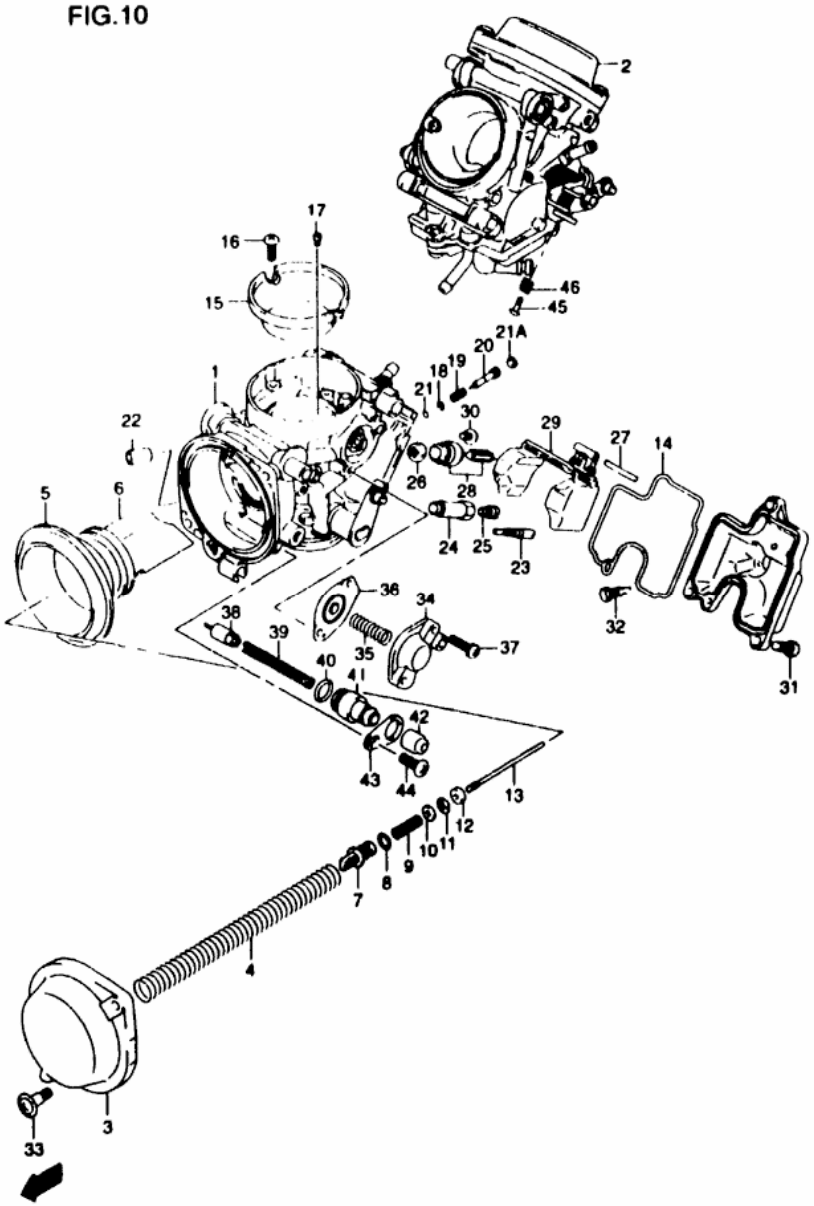

FIG 10 (C- 6) CARBURETOR

REF.NO.	PART NO.	DESCRIPTION	Q'TY	REMARKS
26	13376-19F00	FILTER	2	
27	13254-92910	FLOAT PIN	2	
28	13370-20F00	VALVE ASSY. NEEDLE	2	
29	13250-33E00	FLOAT ASSY	2	
30	13602-05A10	SCREW	2	
31	02112-05127	SCREW	6	
32	13247-13A00	SCREW DRAIN	2	
33	13247-33E00	SCREW	4	
34	13502-10F00	COVER ASSY	2	
35	13417-19F00	SPRING	2	
36	13480-10F00	DIAPHRAGM ASSY	2	
37	13601-04148	SCREW	4	
38	13411-01400	PLUNGER STARTER	2	
39	13417-07F00	SPRING	2	
40	13278-18E20	O RING	2	
41	13418-19F00	HOLDER GUIDE	2	
42	13681-04010	CAP CARBURETOR	2	
43	13421-19F00	PLATE	2	
44	13601-05148	SCREW	2	
45	13267-44B00	SCREW	1	REAR
46	13271-44B00	SPRING	1	REAR

FIG.11

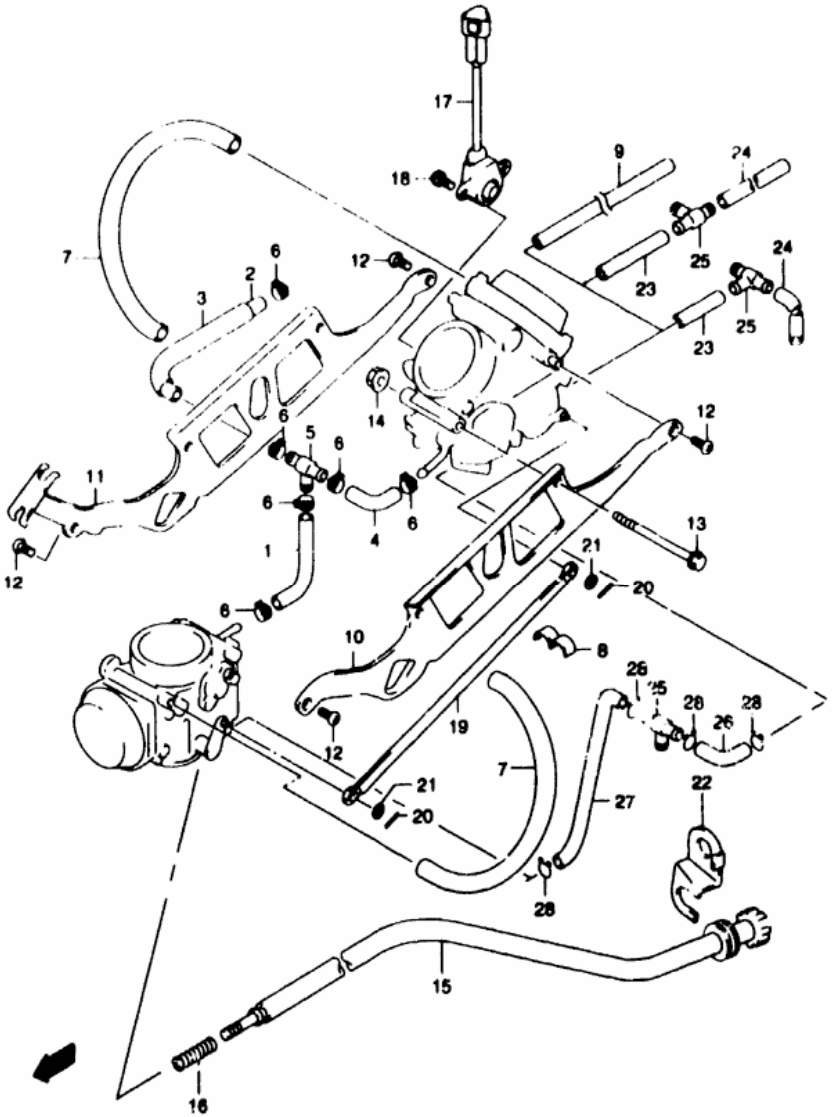

FIG 11 (C- 7) CARBURETOR FITTINGS

REF.NO.	PART NO.	DESCRIPTION	Q'TY	REMARKS
1	13684-48B10	HOSE	1	
2	13684-19F00	HOSE (5 3X10 5X125)	1	
3	13684-19F10	HOSE (11X15X90)	1	
4	13684-19F20	HOSE (5 3X10 5)	1	
5	13685-48B00	NIPPLE	1	
6	13671-19F00	CLIP	6	
7	13686-19F00	HOSE (7X11X250)	2	
8	13671-19F10	CLIP	1	
9	09352-50903-600	HOSE (5X9X600)	1	E3 E28 L 600 →175
10	13482-20F00	PLATE	1	
11	13447-20F00	PLATE	1	
12	13602-05109	SCREW	4	
13	13612-19F00	BOLT	2	
14	13324-19F00	NUT	2	
15	13267-19F00	ADJUST SCREW ASS'	1	
16	13271-33C00	SPRING	1	
17	13580-19F00	SENSOR ASSY	1	
18	13602-19B50	SCREW	2	
19	13553-19F00	LEVER ASSY	1	
20	13563-19F00	PIN	2	
21	13615-45010	WASHER	2	
22	13279-19F00	PLATE, IDLE ADJUST	1	
23-1	13683-10D20	HOSE (5X9X60)	1	E33
23-2	13684-20F30	HOSE (5X9X40)	1	E33
24	09352-50901-600	HOSE (5X9X600)	1	E33 L 600 →125
25	13685-48B00	NIPPLE	2	E33
26	13684-19F20	HOSE (5 3X10 5)	1	E33
27	13687-20F40	HOSE (5 3X10 5)	1	E33
28	09401-10410	CLIP	4	E33

AIR CLEANER..... C-08
BATTERY..... E-04
CAM CHAIN..... C-04
CAM SHAFT / VALVE.. C-03
CARBURETOR FITTINGS C-07
CRANKCASE COVER.... B-07
CRANKCASE..... B-05
CRANKSHAFT..... B-08
CYLINDER..... B-04
ELECTRICAL..... E-05
FRONT BRAKE HOSE... I-07
FRONT CALIPER..... I-06
FRONT CYLINDER HEAD B-02
FRONT FENDER..... G-11
FRONT FORK DAMPER.. I-02
GEAR SHIFTING..... D-12
HANDLE BAR..... H-02
HANDLE COVER..... H-04
HANDLE SWITCH..... F-11
HEADLAMP HOUSING... G-10
OPTIONAL..... J-07
RADIATOR HOSE..... D-07
RADIATOR..... D-06
REAR CALIPER..... J-05
REAR CUSHION LEVER. J-03
REAR WHEEL..... J-04
SEAT TAIL COVER ... H-11
SEAT..... H-10
SPEEDOMETER..... F-02
STAND..... G-03
TRANSMISSION..... D-10
TURNSIGNAL LAMP.... F-06
WARNING LABEL..... H-09
WATER PUMP..... D-04
WIRING HARNESS..... F-09

FIG.19

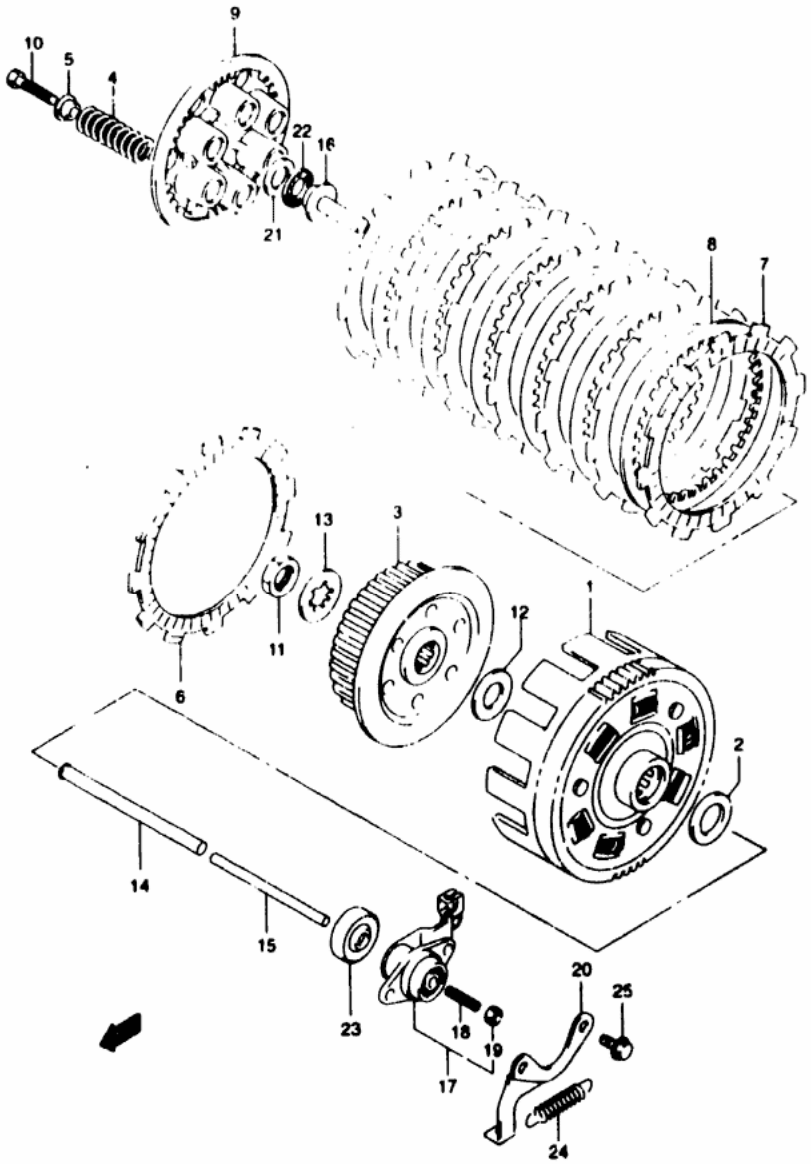

FIG 19 (D- 9) CLUTCH

REF.NO.	PART NO.	DESCRIPTION	Q'TY	REMARKS
1-1	21200-20810	GEAR ASSY, PRIMARY DRIVEN	1	~E NO P503-106336
1-2	21200-20811	GEAR ASSY, PRIMARY DRIVEN	1	E NO P503-106337~
2	09160-20067	WASHER (20X36X3)	1	
3	21411-44101	HUB CLUTCH SLEEVE	1	
4	21413-20F00	SPRING, CLUTCH	6	
5	21414-01D00	SPACER, CLUTCH SLEEVE HUB	6	
6	21440-19F00	PLATE CLUTCH DRIVE	1	
7	21441-37440	PLATE CLUTCH DRIVE	6	
8	21451-28C31	PLATE CLUTCH DRIVEN (T 1.6)	6	
9	21462-14301	DISC CLUTCH PRESSURE	1	
10	09100-06145	BOLT (6X40)	6	
11	09140-20001	NUT	1	
12	09160-20067	WASHER (20X36X3)	1	
13	09167-20006	LOCK WASHER	1	
14	23110-44111	ROD PUSH RH	1	
15	23111-24A01	ROD, CLUTCH PUSH LH	1	
16	23121-44100	PIECE CLUTCH PUSH	1	
17	23200-11D00	SCREW ASSY CLUTCH RELEASE	1	
18	09134-06010	SCREW	1	
19	08210-00067	NUT	1	
20	23246-19F00	SUPPORT, CLUTCH RELEASE	1	
21	09160-15045	WASHER (15.5X28X1)	1	
22	09263-15003	BEARING (15X28X2)	1	
23	09285-06015	OIL SEAL (6X34X5.5)	1	
24	09443-08001	SPRING	1	
25	01500-06163	BOLT	2	

AIR CLEANER..... C-08 CRANKCASE COVER.... B-07 FRONT BRAKE HOSE... I-07 GEAR SHIFTING..... D-12 OPTIONAL..... J-07 REAR WHEEL..... J-04 TRANSMISSION..... D-10
BATTERY E-06 CRANKCASE B-08 FRONT CALIPER I-04 HANDLE BAR H-03 RADIATOR HOSE D-07 SEAT TAIL COVER... H-11 TURNSIGNAL LAMP.... E-06

FIG.45

FIG 45 (H- 8) COWLING INSTALATION PARTS (SV650SX/SY E28) CANADA ONLY

REF.NO.	PART NO.	DESCRIPTION	Q'TY	REMARKS
1	94510-19F00	BRACE COWLING	1	
2	01550-08303	BOLT	2	
3	02142-05123	SCREW	2	
4	02142-05203	SCREW	2	
5	09159-05019	NUT	2	
6	94484-24F00	NUT COWLING	4	
7	09409-06314-5PK	CLIP (BLACK)	2	
8	03241-15163	SCREW	2	
9	09148-05038	NUT	2	
10	94521-19F00	BRACKET SIDE UPPER RH	1	
11	94531-19F00	BRACKET SIDE UPPER LH	1	
12	01500-06123	BOLT UPPER	2	
13	94541-19F00	BRACKET SIDE REAR LH	1	
13A	01500-06163	BOLT SIDE REAR	1	
14	09320-08018	CUSHION (RADIATOR)	2	
15	09320-09016	CUSHION	2	
16	09139-06087	SCREW (M6X20)	2	
17	09139-05054	SCREW (M5X16)	11	

FIG.44

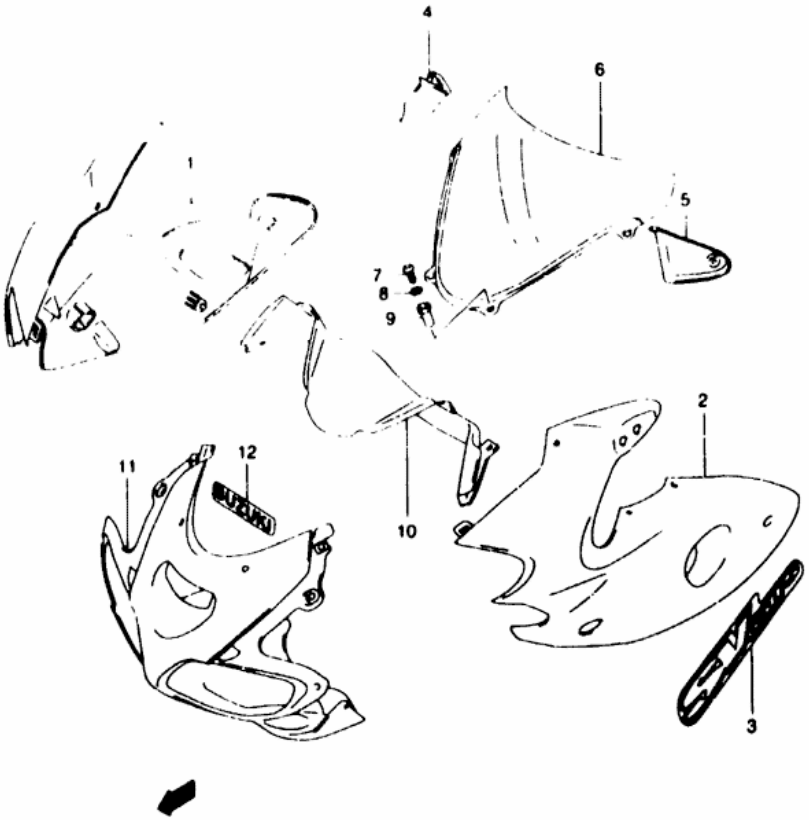

FIG 44 (H- 6) COWLING BODY (SV650SX E26) CANADA ONLY

REF.NO.	PART NO.	DESCRIPTION	Q'TY	REMARKS
1-1	94401-20F00-Y7M	COWL ASSY. SIDE RH (RED)	1	
1-2	94401-20F00-Y9F	COWL ASSY. SIDE RH (YELLOW)	1	
2-1	94402-20F00-Y7M	COWL ASSY. SIDE LH (RED)	1	
2-2	94402-20F00-Y9F	COWL ASSY. SIDE LH (YELLOW)	1	
3-1	68181-20F00-NOH	EMBLEM	2	FOR Y7M
3-2	68181-20F00-NOK	EMBLEM	2	FOR Y9F
4	94413-19F00	PANEL UPPER RH	1	
5	94423-19F00	PANEL UPPER LH	1	
6	94611-19F00	WINDOW SCREEN	1	
7	09139-05025	SCREW (5X14)	2	
8	08322-01053	WASHER	2	
9	09159-05019	NUT	2	
10	94630-19F00	PANEL METER	1	
11-1	94403-19F00-Y7M	COWLING ASSY CENTER (RED)	1	
11-2	94403-19F00-Y9F	COWLING ASSY CENTER (YELLOW)	1	
12	68641-19F00-20G	EMBLEM (SUZUKI) (GRAY)	1	FOR Y9F Y7M

REFER TO FIG 44A(H-7) FOR SV650SY E28

FIG.44A

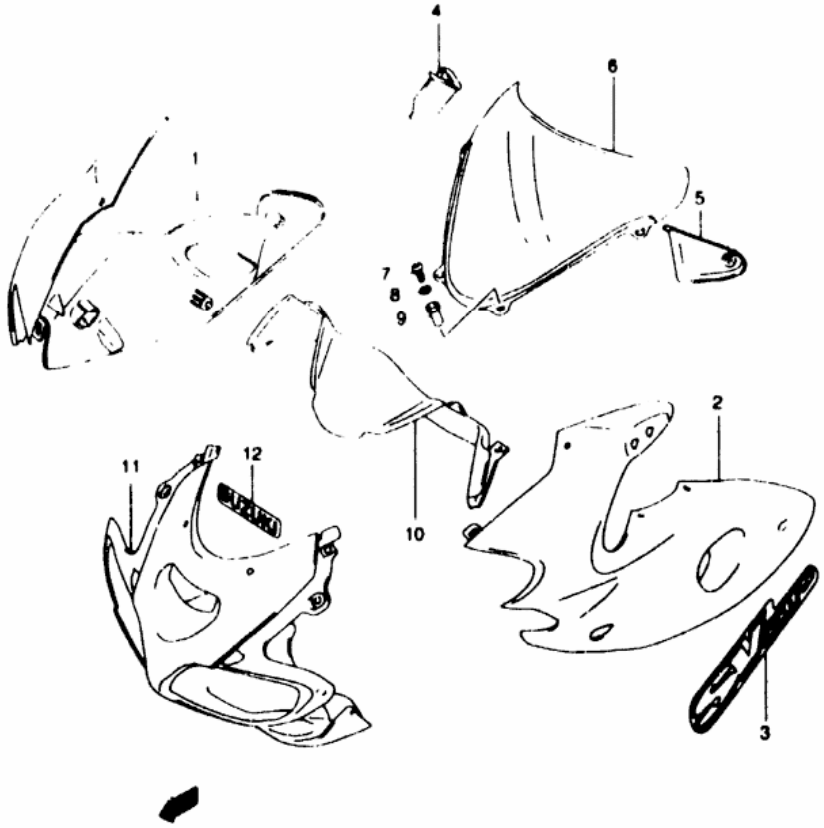

FIG 44A(H- 7) COWLING BODY (SV650SY E28) CANADA ONLY

REF.NO.	PART NO.	DESCRIPTION	Q'TY	REMARKS
1-1	94401-20F00-Y9X	COWL ASSY SIDE RH (BLACK)	1	
1-2	94401-20F00-Z7X	COWL ASSY SIDE RH (RED)	1	
1-3	94401-20F00-Z8X	COWL ASSY SIDE RH (YELLOW)	1	
1-4	94401-20F00-YC2	COWL ASSY SIDE RH (BLUE)	1	
2-1	94402-20F00-Y9X	COWL ASSY SIDE LH (BLACK)	1	
2-2	94402-20F00-Z7X	COWL ASSY SIDE LH (RED)	1	
2-3	94402-20F00-Z8X	COWL ASSY SIDE LH (YELLOW)	1	
2-4	94402-20F00-YC2	COWL ASSY SIDE LH (BLUE)	1	
3-1	68181-20F00-N9Y	EMBLEM	2	FOR Y9X
3-2	68181-20F00-N9V	EMBLEM	2	FOR Z7X
3-3	68181-20F00-N9Z	EMBLEM	2	FOR Z8X
3-4	68181-20F00-N9W	EMBLEM	2	FOR YC2
4	94413-19F00	PANEL UPPER RH	1	
5	94423-19F00	PANEL UPPER LH	1	
6	94611-19F00	WINDOW SCREEN	1	
7	09139-05025	SCREW (5x14	2	
8	08322-01053	WASHER	2	
9	09159-05019	NUT	2	
10	94630-19F00	PANEL METER	1	
11-1	94403-19F00-Y7L	COWLING ASSY CENTER (BLACK)	1	
11-2	94403-19F00-Y7M	COWLING ASSY CENTER (RED)	1	
11-3	94403-19F00-Y9F	COWLING ASSY CENTER (YELLOW)	1	
11-4	94403-19F00-YC2	COWLING ASSY CENTER (BLUE)	1	
12-1	68641-19F00-1ZY	EMBLEM "SUZUKI" (GRAY)	1	FOR Y9X YC2
12-2	68641-19F00-20G	EMBLEM "SUZUKI" (GRAY)	1	FOR Z7X,Z8X

FIG.4

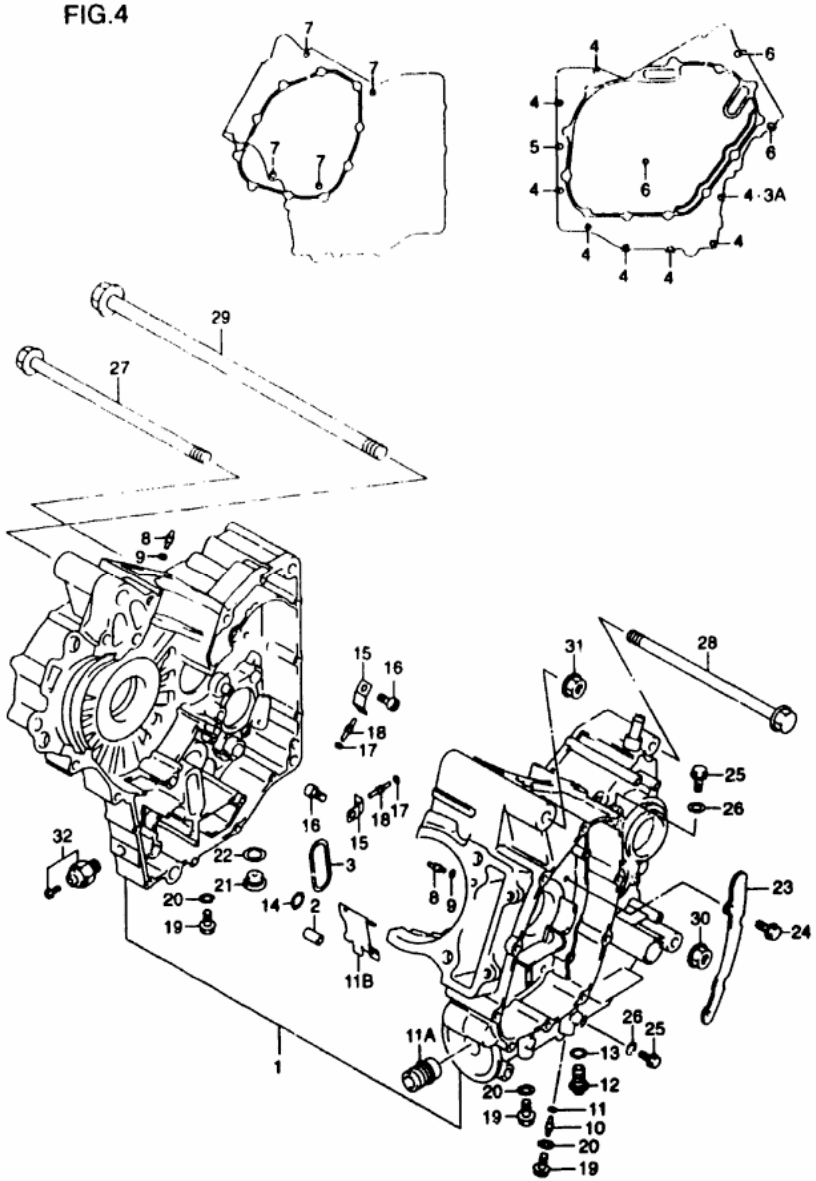

FIG.4 (B- 5) CRANKCASE

REF.NO.	PART NO.	DESCRIPTION	Q'TY	REMARKS
1-1	11301-20830	CRANKCASE SET	1	
1-2	11301-20831	CRANKCASE SET	1	E NO 111683~
1-3	11301-20840	CRANKCASE SET	1	E33
2	09206-11017	PIN (11X20)	2	
3	11315-19F00	O RING, CRANKCASE	1	
3A	09168-06023	GASKET (5 8X13X1 2)	1	E NO 111683~
4	01547-06503	BOLT	8	
5	01547-06507	BOLT	1	
6	07120-08553	BOLT	3	
7	07120-08803	BOLT	4	
8	09493-28010	JET, OIL GALLERY CYLINDER	2	
9	09280-04004	O RING (D 1 2,ID 4 0)	2	
10	09493-28010	JET, OIL GALLERY MISSION	1	
11	09280-04004	O RING (D 1 2 ID 4 0)	1	
11A	16591-06B00	UNION, OIL FILTER STAND	1	
11B	11391-20F10	PLATE, OIL	1	
12	09247-12106	PLUG (12X20)	1	
13	09168-12002	GASKET (12 1X16 2X3 7)	1	
14	09280-12009	O RING (D 1 9,ID 12 6)	1	
15	16438-19F00	PLATE, PISTON COOLING JET	2	
16	09106-06075	BOLT (6X12)	2	
17	09280-04004	O RING (D 1 2,ID 4 0)	2	
18	09493-26007	JET (130)	2	
19	01550-08123	BOLT	3	
20	09168-08029	GASKET	3	
21	09248-16012	PLUG	1	
22	09168-16002	GASKET (16X22X2)	1	

****Engine Cases and Frames** for this model must be ordered on the Frame/Engine Case Order Form (99924-FC003) If you have any questions regarding these procedures, please call Your Parts Coordinator *before* placing your order

FIG.4

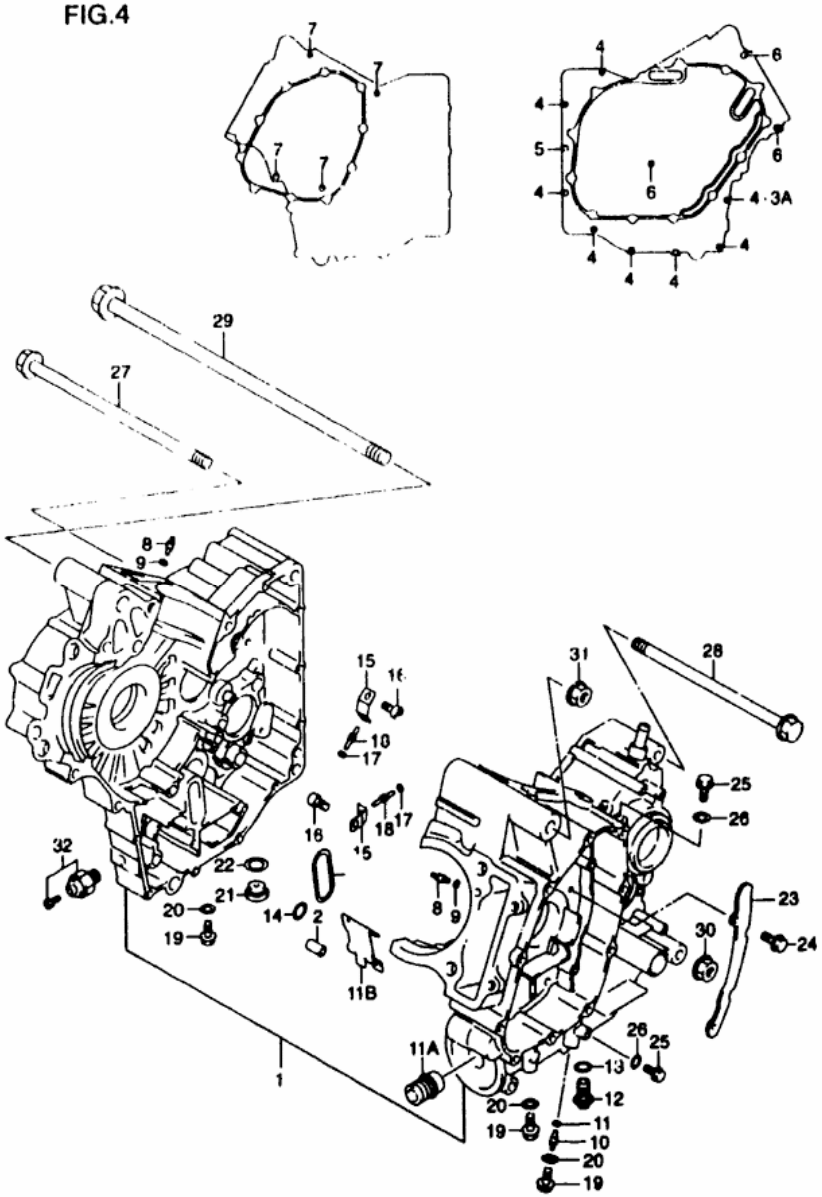

FIG 4 (B- 6) CRANKCASE

REF.NO.	PART NO.	DESCRIPTION	Q'TY	REMARKS
23	11323-19F00	PLATE, OIL SEPARATOR	1	
24	01547-06123	BOLT	2	
25	01550-06123	BOLT	2	
26	09168-06023	GASKET (5 8X13X1 2)	2	
27	09103-10226	BOLT (10X260)	1	
28	09103-10041	BOLT (10X215)	1	
29	09103-12054	BOLT (12X310)	1	
30	08319-31107	NUT	1	
31	08319-31128	NUT	1	
32	37820-33D00	SWITCH ASSY. OIL PRESSURE	1	

FIG.5

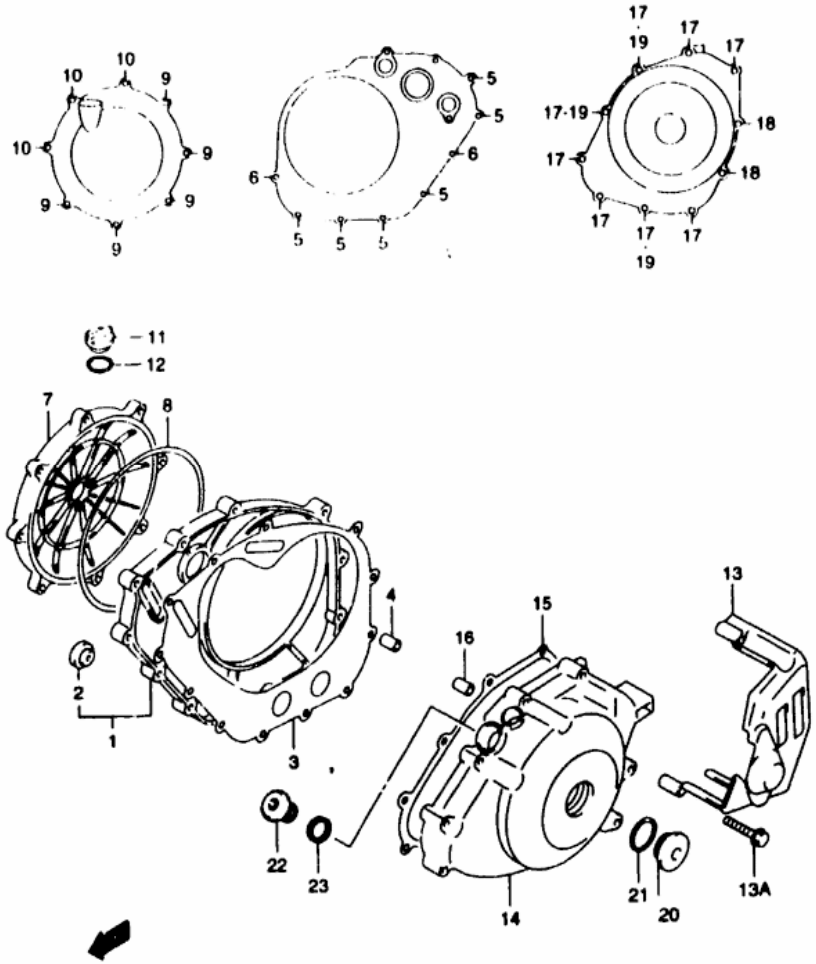

FIG 5 (B- 7) CRANKCASE COVER

REF.NO.	PART NO.	DESCRIPTION	Q'TY	REMARKS
1	11340-19F00	COVER, CLUTCH INNER	1	
2	11971-33210	LENS, OIL LEVEL CHECK	1	
3	11482-19F00	GASKET, CLUTCH COVER INNER	1	
4	04211-09149	PIN	2	
5	09103-06204	BOLT	6	
6	09103-06205	BOLT	2	
7	11370-19F00	COVER, CLUTCH OUTER	1	
8	11484-19F00	O RING, CLUTCH COVER OUTER	1	
9	09103-06180	BOLT	5	
10	09103-06207	BOLT	3	
11	09259-20008	PLUG	1	
12	09280-17003	O RING (D 3.1 ID 16.8)	1	
13	11361-19F00	COVER, ENGINE SPROCKET	1	
13A	01547-06457	BOLT	3	
14	11351-19F00	COVER, MAGNETO	1	
15	11483-19F00	GASKET, MAGNETO COVER	1	
16	04211-09149	PIN	2	
17	01547-06357	BOLT	8	
18	01547-06657	BOLT	2	
19-1	09168-06023	GASKET (5.8X13X1.2)	1	
19-2	09168-06023	GASKET (5.8X13X1.2)	3	E NO 111683~
20	09259-26012	PLUG	1	
21	09280-22008	O RING (D 3.1 ID 22.7)	1	
22	09248-16012	PLUG	1	
23	09168-16002	GASKET (13.8X18.8X0.4)	1	

FIG.6

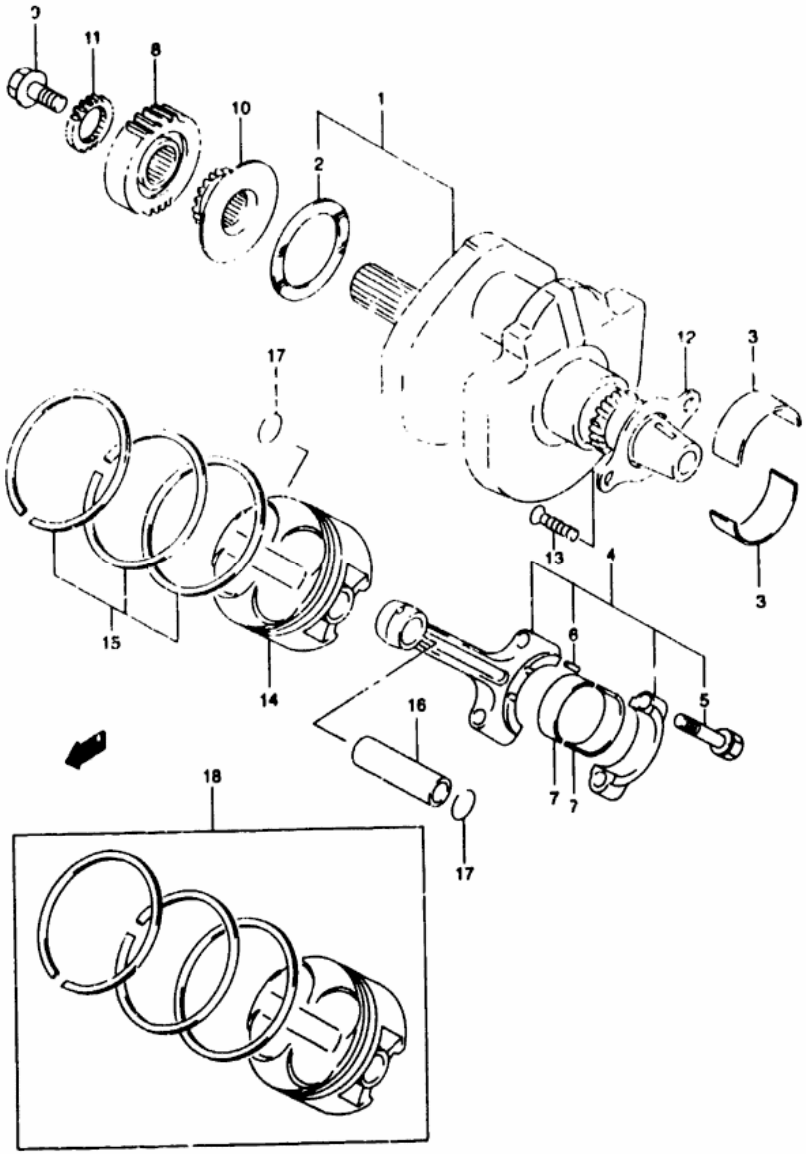

FIG.6 (B-8, CRANKSHAFT

REF.NO.	PART NO.	DESCRIPTION	Q'TY	REMARKS
1	12000-20840	CRANKSHAFT SET	1	
2-1	12228-19F00-0A0	WASHER, THRUST (T 1.925)	1	
2-2	12228-19F00-0B0	WASHER, THRUST (T 1.95)	1	
2-3	12228-19F00-0C0	WASHER, THRUST (T 1.975)	1	
2-4	12228-19F00-0D0	WASHER, THRUST (T 2.0)	1	
2-5	12228-19F00-0E0	WASHER, THRUST (T 2.025)	1	
2-6	12228-19F00-0F0	WASHER, THRUST (T 2.05)	1	
2-7	12228-19F00-0G0	WASHER, THRUST (T 2.075)	1	
2-8	12228-19F00-0H0	WASHER, THRUST (T 2.1)	1	
2-9	12228-19F00-0I0	WASHER, THRUST (T 2.125)	1	
2-10	12228-19F00-0J0	WASHER, THRUST (T 2.15)	1	
3-1	12229-19F10-0A0	BEARING, CRANKSHAFT	4	SEE
3-2	12229-19F10-0B0	BEARING, CRANKSHAFT	4	NOTE
3-3	12229-19F10-0C0	BEARING, CRANKSHAFT	4	BELOW
4	12160-20F00	CONNECTING ROD ASSY	2	
5	12163-17C50	BOLT, CONNECTING ROD	4	
6	12165-27A50	PIN, CONNECTING ROD	4	
7-1	12164-46E01-0A0	BEARING, CRANK PIN	4	SEE
7-2	12164-46E01-0B0	BEARING, CRANK PIN	4	NOTE
7-3	12164-46E01-0C0	BEARING, CRANK PIN	4	BELOW
7-4	12164-46E01-0D0	BEARING, CRANK PIN		
8	21111-20F00	GEAR, PRIMARY DRIVE		
9	21112-19F00	BOLT, PRIMARY DRIVE GEAR		
10	12731-19F00	SPROCKET, CAM CHAIN DRIVE	1	
11	17451-19F00	GEAR, WATER PUMP DRIVE	1	
12	12541-20F00	RETAINER, CRANKSHAFT BRG LH	1	
13	09126-06011	SCREW	2	
14	12111-20F00-0F0	PISTON	2	
15	12140-20F00	RING SET, PISTON	2	
16	12151-05A00	PIN, PISTON	2	
17	09381-20004	CIRCLIP	4	
18-1	12100-20F00-050	PISTON SET (OS.0.5)	2	OPT
18-2	12100-20F00-100	PISTON SET (OS.1.0)	2	OPT

NOTE:

THERE IS A BEARING KIT AVAILABLE FOR THIS MODEL SV650 X (1999)
PART # 99104-BRGKT-020

REFER TO PARTS BULLETIN # 431-92-02 FOR EXPLANATION

FIG.3

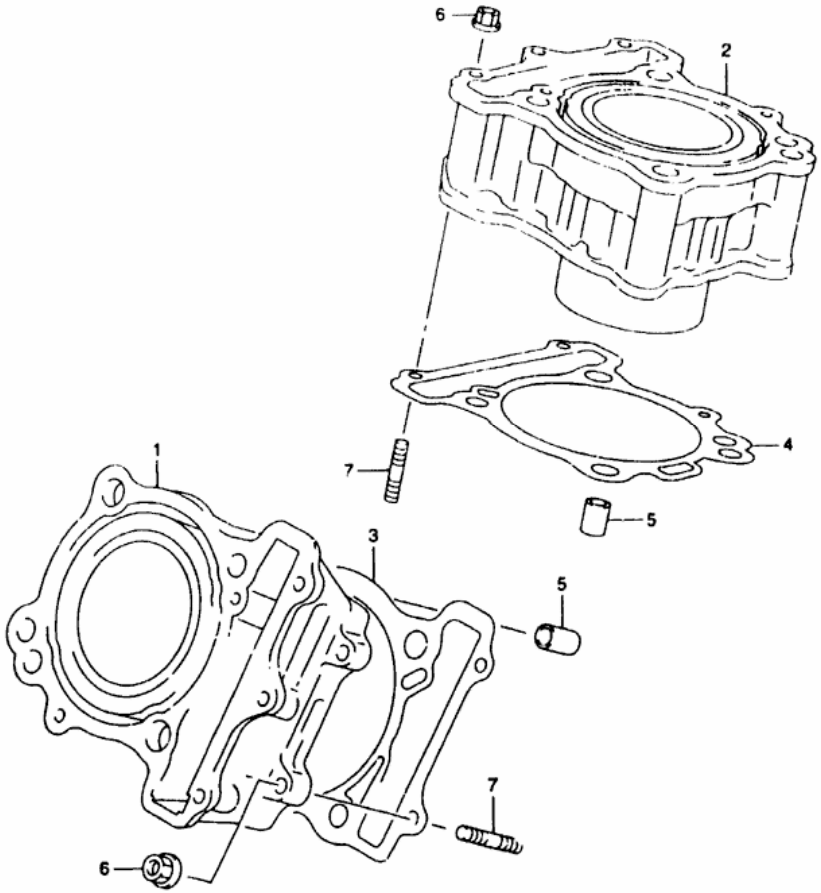

FIG.3 (B-4) CYLINDER

REF.NO.	PART NO.	DESCRIPTION	Q'TY	REMARKS
1-1	11210-20F00-0F0	CYLINDER, FRONT	1	
1-2	11210-20F10-0F0	CYLINDER, FRONT	1	E33
2-1	11220-20F00-0F0	CYLINDER, REAR	1	
2-2	11220-20F10-0F0	CYLINDER, REAR	1	E33
3	11241-19F00	GASKET, CYLINDER FRONT	1	
4	11242-19F00	GASKET, CYLINDER REAR	1	
5	04211-13189	PIN	4	
6	08316-10063	NUT	4	
7	01421-06253	STUD BOLT	4	

FIG.25

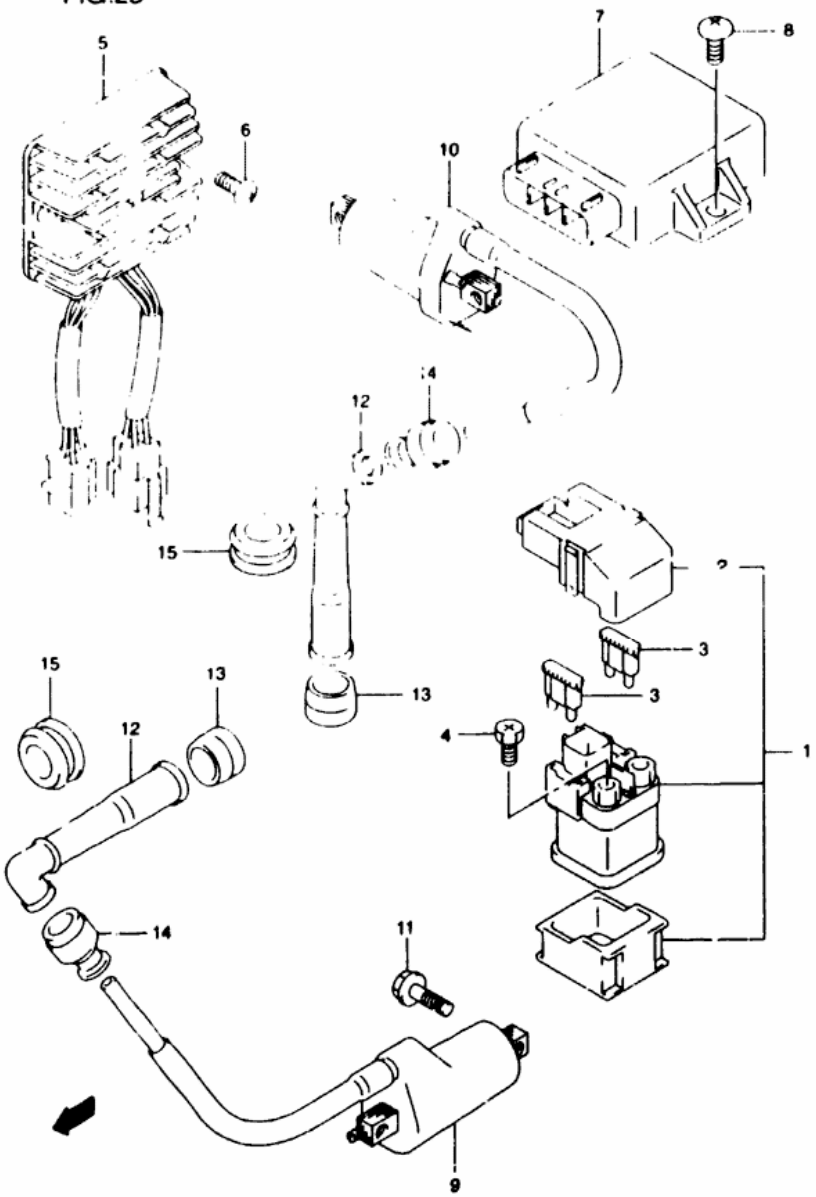

FIG 25 (E-5) ELECTRICAL

REF.NO.	PART NO.	DESCRIPTION	Q'TY	REMARKS
1	31800-21E20	RELAY ASSY, STARTING MOTOR	1	
2	31861-21E20	COVER, RELAY ASSY	1	
3	09481-30101	FUSE (30A)	2	
4	09128-06013	SCREW (6X8)	2	
5	32800-24B01	RECTIFIER ASSY	1	
6	02162-06163	BOLT	2	
7	32900-20F10	IGNITER ASSY	1	
8	03542-06163	SCREW	2	
9	33410-19F00	COIL ASSY IGNITION	1	
10	33420-19F00	COIL ASSY IGNITION	1	
11	01500-06203	BOLT	4	
12	33510-11D00	CAP SPARK PLUG	2	
13	33541-23E01	SEAL SPARK PLUG CAP	2	
14	33542-38B00	SEAL HIGH TENSION CORD	2	
15	33543-19F00	COVER SPARK PLUG CAP	2	

AIR CLEANER..... C-08
BATTERY..... E-04
CAM CHAIN..... C-04
CAM SHAFT / VALVE.. C-03
CRANKCASE COVER.... B-07
CRANKCASE..... B-05
CRANKSHAFT..... B-08
CYLINDER..... B-04
FRONT BRAKE HOSE... I-07
FRONT CALIPER..... I-06
FRONT CYLINDER HEAD B-02
FRONT FENDER..... G-11
GEAR SHIFTING..... D-12
HANDLE BAR..... H-02
HANDLE LEVER..... H-04
HANDLE SWITCH..... F-11
OPTIONAL..... J-07
RADIATOR HOSE..... D-07
RADIATOR..... D-06
REAR CALIPER..... J-05
REAR WHEEL..... J-04
SEAT TAIL COVER.... H-11
SEAT..... H-10
SPEEDOMETER..... F-02
TRANSMISSION..... D-10
TURNSIGNAL LAMP.... F-06
WARNING LABEL..... H-09
WATER PUMP..... D-04

FIG.37

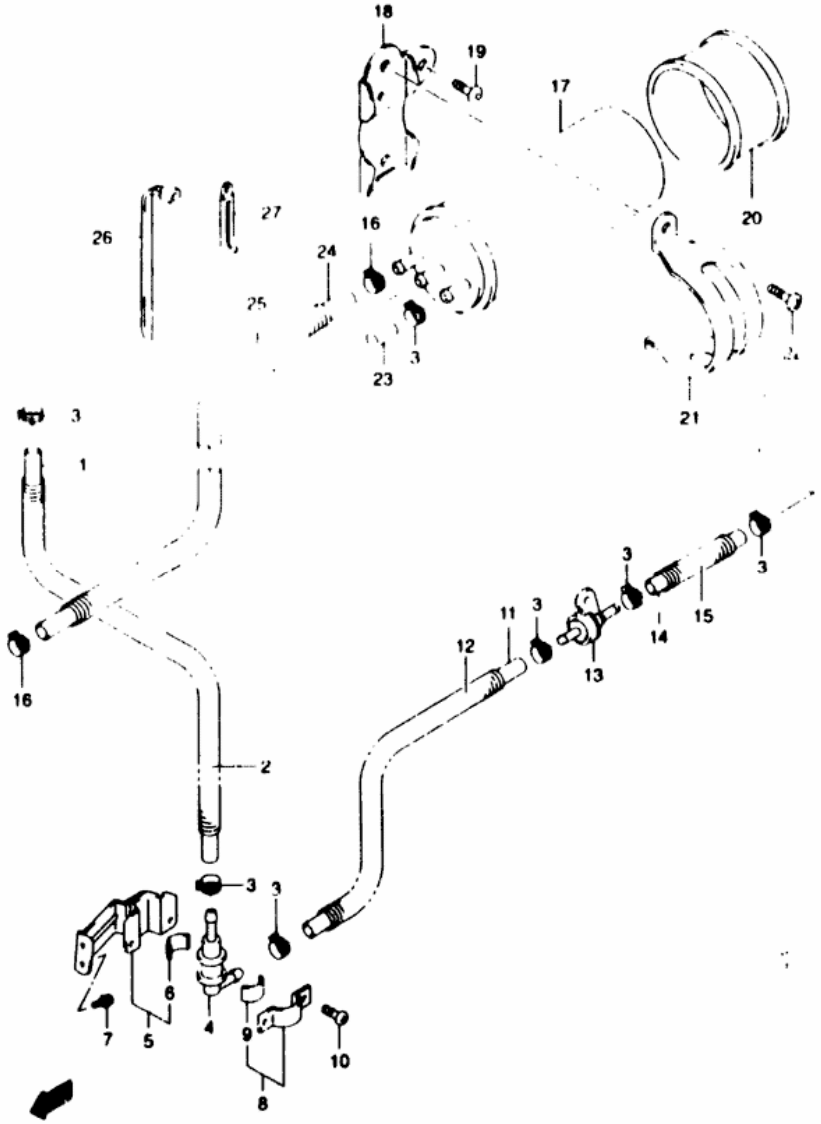

FIG 37 (G- 8) EVAPO SISTEM (E33)

REF.NO.	PART NO.	DESCRIPTION	Q'TY	REMARKS
1	44435-19F00	HOSE TANK & VALVE	1	
2	09351-14152-600	PROTECTOR	1	L 600 ϕ120
3	09401-11413	CLIP	7	
4	44240-17C00	VALVE FUEL TANK BREATHER	1	
5	44890-19F00	PLATE BREATHER VALVE	1	
6	44894-24A00	CUSHION	1	
7	01550-06123	BOLT	2	
8	44892-24A00	PLATE VALVE	1	
9	44894-24A00	CUSHION	1	
10	02142-04083	SCREW	2	
11	44434-19F00	HOSE VALVE & CANISTER NO 1	1	
12	09351-14152-600	PROTECTOR	1	L 600 ϕ190
13	44240-24F00	VALVE 2 WAY	1	
14	09355-54116-600	HOSE VALVE & CANISTER NO 2	1	L 600 ϕ100
15	09351-14152-600	PROTECTOR	1	L 600 ϕ70
16	09401-12404	CLIP	2	
17	17210-26E00	CANISTER	1	
18	44880-19F00	BRACKET, CANISTER	1	
19	09139-06067	SCREW	2	
20	44883-26E00	CUSHION, CANISTER	1	
21	44882-19F00	HOLDER, CANISTER	1	
22	02142-06123	SCREW	1	
23	09251-07003	CAP	1	
24	09359-54112-760	HOSE, CANISTER & CARB	1	
25	09351-14152-00B	PROTECTOR	1	L 2000 ϕ720
26	09407-18402	CLAMP	2	
27	09404-06434	CLAMP	1	

AIR CLEANER..... C-08
BATTERY..... E-04
CRANKCASE COVER.... B-07
CRANKCASE..... B-05
FRONT BRAKE HOSE... I-07
FRONT CALIPER..... I-06
REAR SHIFTING.. ... D-12
HANDLE BAR..... H-02
OPTIONAL..... J-07
RADIATOR HOSE..... D-07
REAR WHEEL..... J-04
SEAT TAIL COVER.... H-11
TRANSMISSION..... D-10
TURNSIGNAL LAMP.... F-06

FIG.34

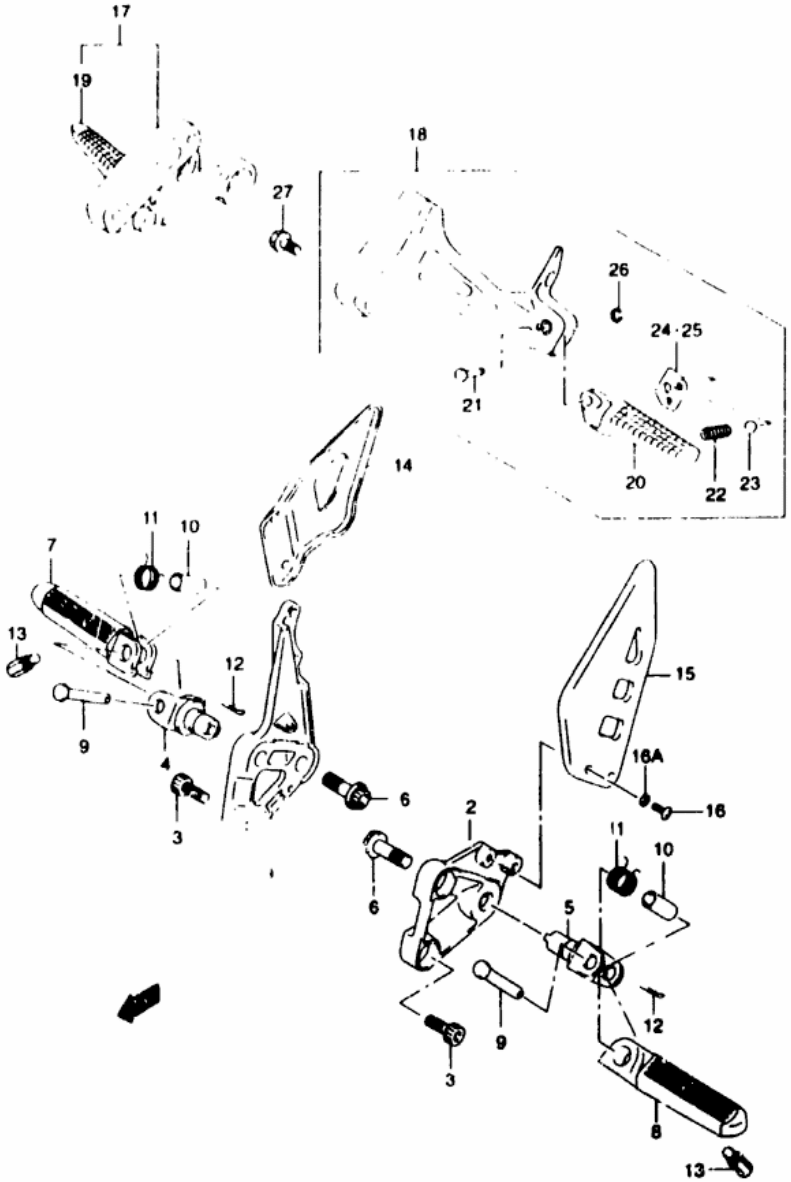

FIG 34 (G- 4) FOOTREST

REF.NO.	PART NO.	DESCRIPTION	Q'TY	REMARKS
1-1	43511-19F00	BRACKET, FRONT FOOTREST RH	1	SV650X/Y
1-2	43511-33E10	BRACKET, FRONT FOOTREST RH	1	SV650SX/SY E28
2-1	43521-19F00	BRACKET, FRONT FOOTREST LH	1	SV650X/Y
2-2	43521-33E00	BRACKET, FRONT FOOTREST LH	1	SV650SX/SY E28
3	07130-08203	BOLT	4	
4	43530-17E01	HOLDER FOOTREST RH	1	
5	43540-17E00	HOLDER, FOOTREST LH	1	
6	09106-10064	BOLT	2	
7	43510-02F11	BAR, FOOTREST RH	1	
8	43520-02F11	BAR FOOTREST LH	1	
9	09200-08057	PIN	2	
10	09180-08149	SPACER (8.1X12X22)	2	
11	09448-18022	SPRING	2	
12	04111-25158	COTTER PIN	2	
13	43576-07D01	BOLT BANK SENSOR	2	
14	43571-33E01	GUARD, FRONT FOOTREST RH	1	
15	43576-19F00	GUARD, FRONT FOOTREST LH	1	
16	09139-05054	SCREW (5X16)	2	
16A	09161-08018	WASHER	2	
17	43600-19F00	FOOTREST ASSY, PILLION RH	1	
18	43700-19F00	FOOTREST ASSY, PILLION LH	1	
19	43611-33E10	BAR, PILLION FOOTREST RH	1	
20	43621-33E10	BAR, PILLION FOOTREST LH	1	
21	09208-06007	PIN	2	
22	09440-05005	SPRING	2	
23	06111-07004	BALL	2	
24	43816-33E21	PLATE, PILLION RH	1	
25	43826-33E21	PLATE, PILLION LH	1	
26	08332-11043	E RING	2	
27	01550-08163	BOLT	4	

FIG.32

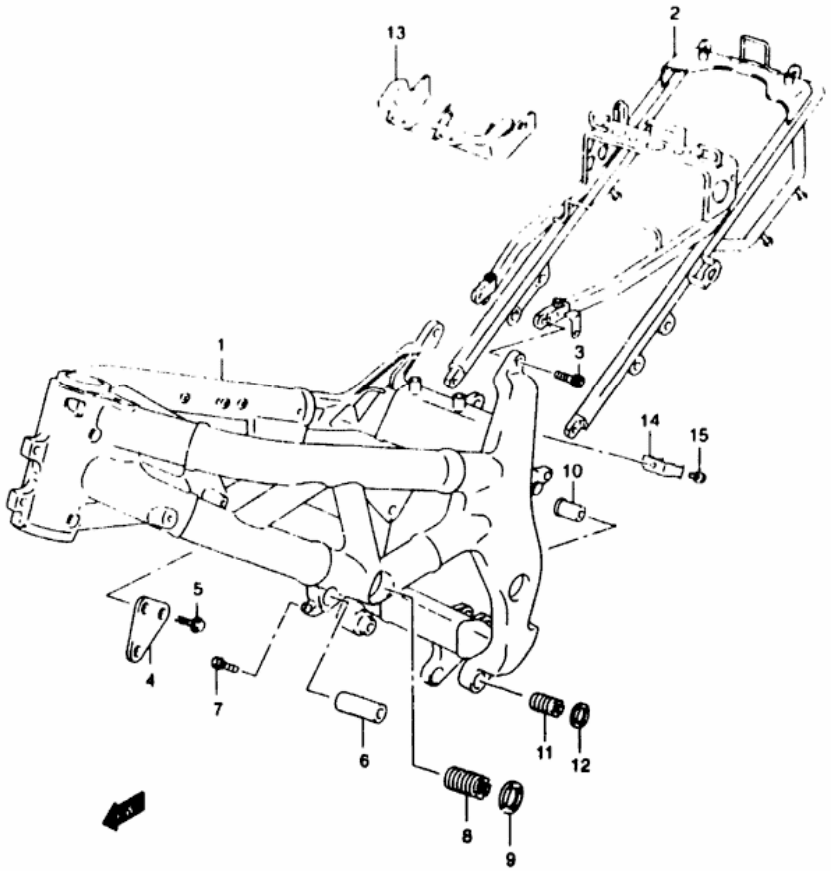

FIG 32 (G-2) FRAME

REF.NO.	PART NO.	DESCRIPTION	Q'TY	REMARKS
1-1	41100-19F01-13L	FRAME (SILVER)	1	MODEL X
1-2	41100-19F02-13L	FRAME (SILVER)	1	MODEL Y
2	41200-19F01	RAIL SEAT	1	
3	07130-10303	BOLT	4	
4	41991-19F00	PLATE MOUNT FRONT RH	1	
5	01550-08203	BOLT	2	
6	41198-19F00	SPACER HEAD MOUNT	3	
7	07130-08307	BOLT	3	
8	41921-19F00	BOLT CRANKCASE ADJUST	1	
9	41922-19F00	NUT CRANKCASE ADJUST	1	
10	41941-19F00	SPACER CRANKCASE REAR UPPER	1	
11	41921-33E11	BOLT CRANKCASE ADJUST	1	
12	41922-33E00	NUT CRANKCASE ADJUST	1	
13	47411-19F01	HOLDER ELECTRIC PART	1	
14	47413-19F00	PLATE RELAY	1	
15	01550-06123	BOLT	1	

******Engine Cases and Frames** for this model must be ordered on the Frame/Engine Case Order Form (99924-FC003). If you have any questions regarding these procedures, please call your Parts Coordinator *before* placing your order.

FIG.38

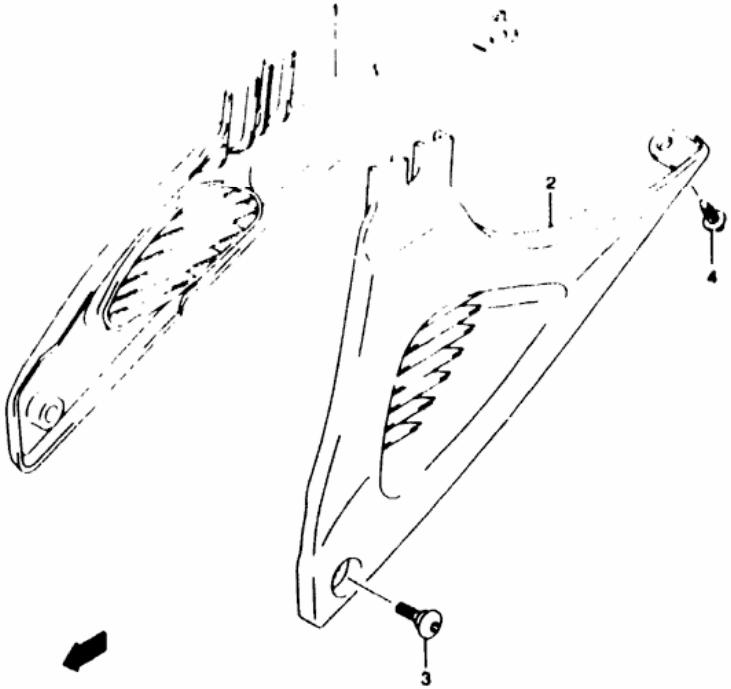

FIG 38 (G-ɔ, FRAME COVER

REF.NO.	PART NO.	DESCRIPTION	Q'TY	REMARKS
1	47111-19F00	COVER, FRAME RH	1	
2	47211-19F00	COVER, FRAME LH	1	
3	09139-05054	SCREW (M5X16)	2	
4	09409-06314-5PK	CLIP (BLACK)	2	

FIG.53

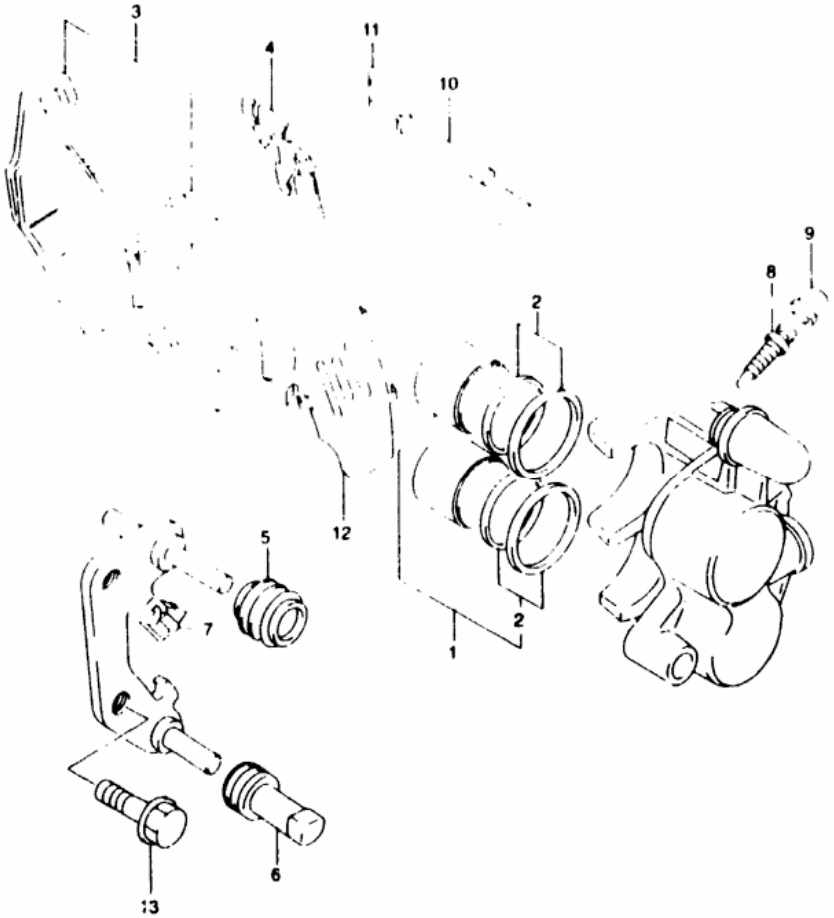

FIG 53 (1-6) FRONT CALIPER

REF.NO.	PART NO.	DESCRIPTION	Q'TY	REMARKS
	59100-33D80	CALIPER ASSY. FRONT RH	1	
	59300-33D80	CALIPER ASSY. FRONT LH	1	
1	59300-33830	PISTON SET	2	
2	59300-33840	SEAL SET PISTON	2	
3-1	59101-33850	PAD SET RH	1	
3-2	59301-33850	PAD SET LH	1	
4-1	59115-33D00	SPRING RH	1	
4-2	59315-33D00	SPRING LH	1	
5	59112-44B00	BOOT	2	
6	59313-36500	INSULATOR	2	
7	59116-33D00	GUIDE	2	
8	59121-18410	BLEEDER	4	
9	55156-66310	CAP	4	
10	59141-44B01	PIN	2	
11	69142-45000	CLIP	2	
12	59171-33D00	SHIM	2	
13	01550-10253	BOLT	4	

FIG.54

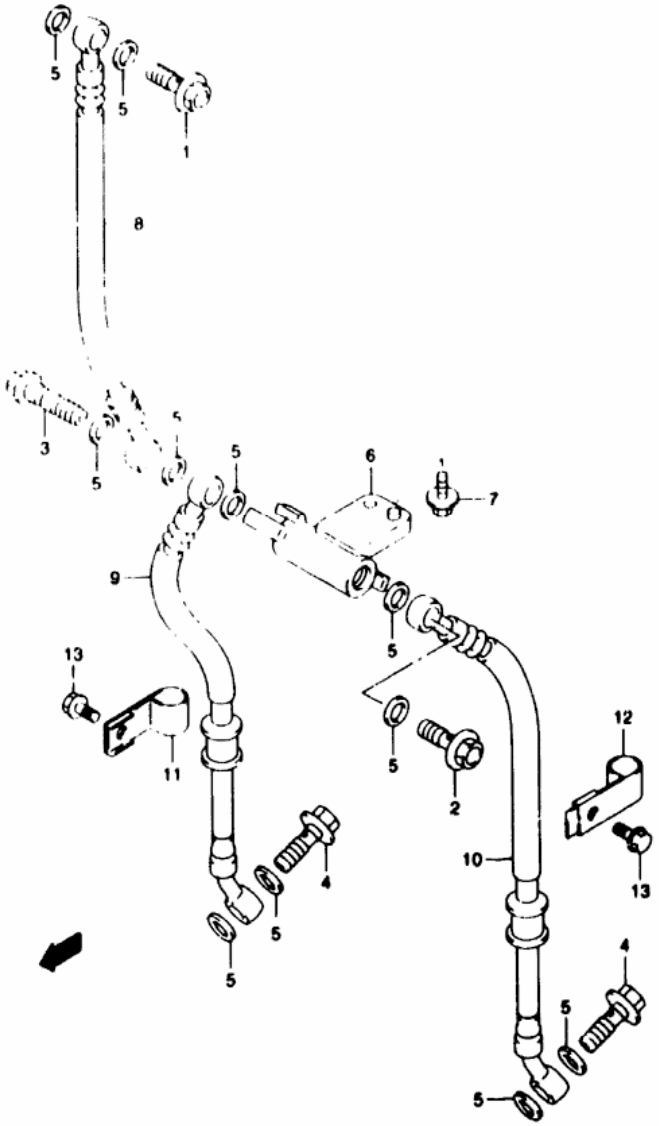

FIG 54 (1- 7) FRONT BRAKE HOSE

REF.NO.	PART NO.	DESCRIPTION	Q'TY	REMARKS
1	09360-10041	BOLT UPPER (10X1 00X22)	1	
2	09360-10041	BOLT JOINT (10X1 00X22)	1	
3	09360-10043	BOLT (10X1 00X36)	1	
4	09360-10042	BOLT LOWER (10X1 25X22)	2	
5	09161-10009	WASHER (10X15X1 5)	11	
6	59491-17E00	JOINT BRAKE HOSE	1	
7	01550-06163	BOLT	1	
8	59480-20F10	HOSE FRONT BRAKE NO 1	1	[illegible]
9	59240-20F00	HOSE FRONT BRAKE NO 2 RH	1	
10	59440-20F00	HOSE FRONT BRAKE NO 2 LH	1	
11	59268-45D00	CLAMP BRAKE HOSE NO 2 RH	1	
12	59269-20F00	CLAMP BRAKE HOSE NO 2 LH	1	
13	01550-06123	BOLT	2	

FIG.1

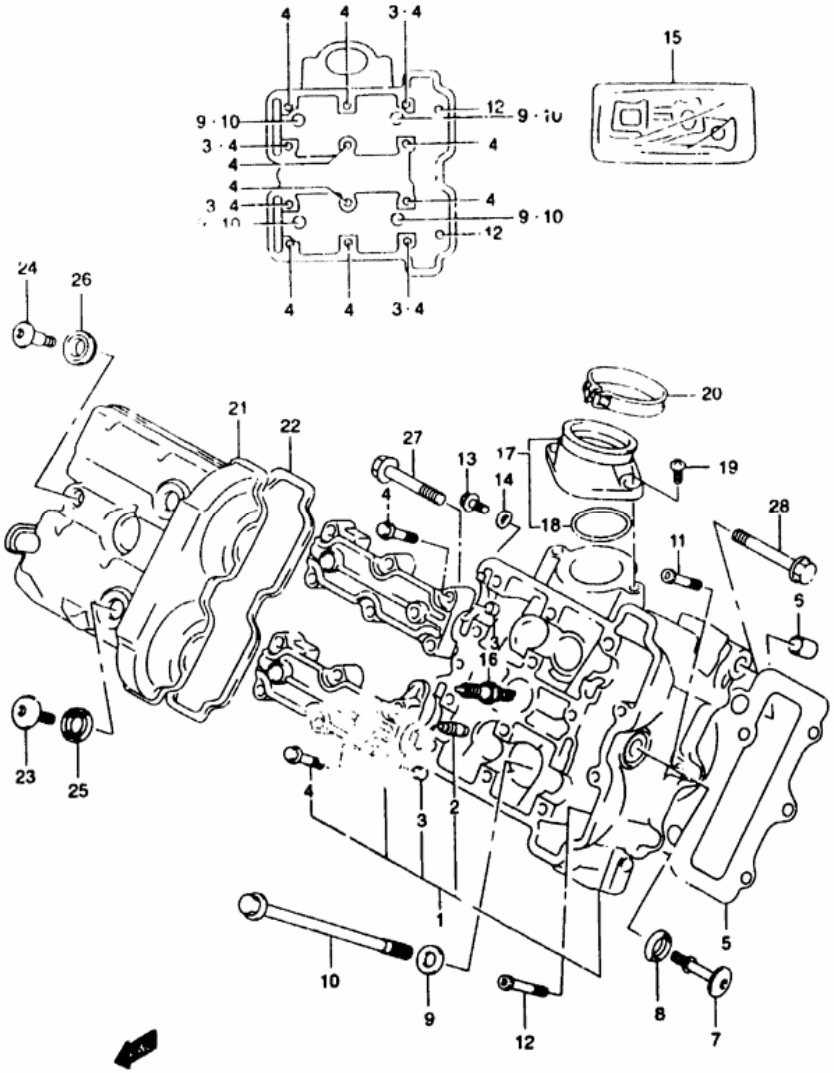

FIG 1 (B- 2) FRONT CYLINDER HEAD

REF.NO.	PART NO.	DESCRIPTION	Q'TY	REMARKS
1-1	11101-20F00	HEAD ASSY, CYLINDER FRONT	1	
1-2	11101 20F10	HEAD ASSY, CYLINDER FRONT	1	E33
2	11115-16D72	GUIDE, VALVE	4	
3	09206-08001	PIN (6 2X8X11)	4	
4	09103-06026	BOLT (6X39)	12	
5	11141-20F00	GASKET, CYLINDER HEAD	1	
6	04211-13189	PIN	2	
7	11161-33E00	BOLT, CYLINDER HEAD SIDE FACE	1	
8	11191-13E00	WASHER, HEAD COVER	1	
9	09160-10082	WASHER (10 5X19X2 0)	4	
10	09103-10272	BOLT (10X160)	4	
11	07120-06403	BOLT	1	
12	09103-06103	BOLT (6X70)	2	
13	07120-06123	BOLT	1	
14	09168-06023	GASKET (5 8X13X1 2)	1	
15	11401-20860	GASKET SET	1	OPT
16-1	09482-00456	SPARK PLUG (NGK,CR8E)	1	
16-2	09482-00457	SPARK PLUG (DENSO,U24ESR-N)	1	
16-3	09482-00458	SPARK PLUG (NGK,CR9E)	1	OPT
16-4	09482-00459	SPARK PLUG (DENSO,U27ESR-N)	1	OPT
16-5	09482-00460	SPARK PLUG (NGK,CR10E)	1	OPT
16-6	09482-00461	SPARK PLUG (DENSO,U31ESR-N)	1	OPT
17	13101-20F00	PIPE ASSY, INTAKE FRONT	1	
18	09280-46006	O RING	1	
19	02122-06163	SCREW	2	
20	09402-56208	CLAMP	1	
21	11171-19F00	COVER, CYLINDER HEAD FRONT	1	
22	11173-19F00	GASKET, CYLINDER HEAD COVER	1	
23	09106-07009	BOLT (7X17.5)	2	
24	09106-07010	BOLT (7X31)	1	
25	09161-11008	WASHER	2	
26	11192-13E00	CUSHION, HEAD COVER BOLT	1	
27	01550-10807	BOLT	1	
28	01550-10807	BOLT	1	

AIR CLEANER..... C-08 CRANKCASE COVER.... B-07 FRONT BRAKE HOSE... I-07 GEAR SHIFTING..... D-12 OPTIONAL..... J-07 REAR WHEEL..... J-04 TRANSMISSION..... D-10
BATTERY F-06 CRANKCASE B-05 FRONT CALIPER I-06 HANDLE BAR H-12 RADIATOR HOSE D-07 SEAT TAIL COVER.... H-11 TURNSIGNAL LAMP.... F-06

FIG.40

FIG 40 (G-11) FRONT FENDER

REF.NO.	PART NO.	DESCRIPTION	Q'TY	REMARKS
1-1	53109-19F00-Y7E	FENDER FRONT (BLUE)	1	MODEL X
1-2	53109-19F00-Y7M	FENDER FRONT (RED)	1	MODEL X, Y
1-6	53109-19F00-YC2	FENDER FRONT (BLUE)	1	MODEL Y
2	53120-3[illegible]00	PLATE FRONT FENDER	2	
3	01547-[illegible]07	BOLT	4	

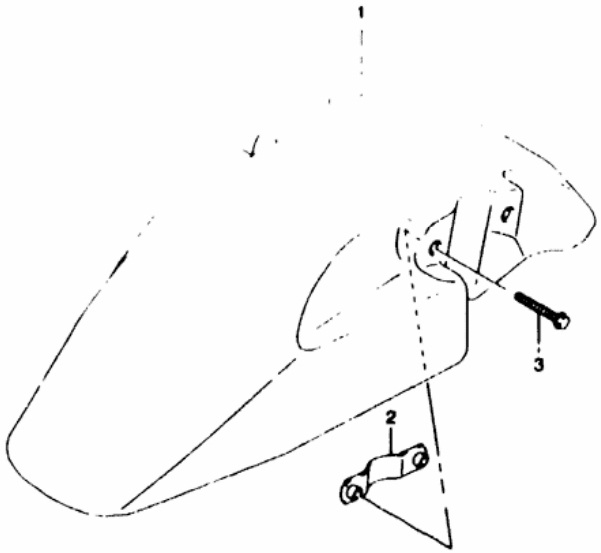

AIR CLEANER..... C-08
BATTERY..... E-04
CAM CHAIN..... C-04
CRANKCASE COVER.... B-07
CRANKCASE..... B-05
CRANKSHAFT..... B-08
FRONT BRAKE HOSE... I-07
FRONT CALIPER..... I-06
FRONT CYLINDER HEAD B-02
GEAR SHIFTING..... D-12
HANDLE BAR..... H-02
HANDLE LEVER..... H-06
OPTIONAL..... J-07
RADIATOR HOSE..... D-07
RADIATOR..... D-06
REAR WHEEL..... J-04
SEAT TAIL COVER.... H-11
SEAT..... H-10
TRANSMISSION..... D-10
TURN SIGNAL LAMP.... F-06
WARNING LABEL..... H-09

FIG.50

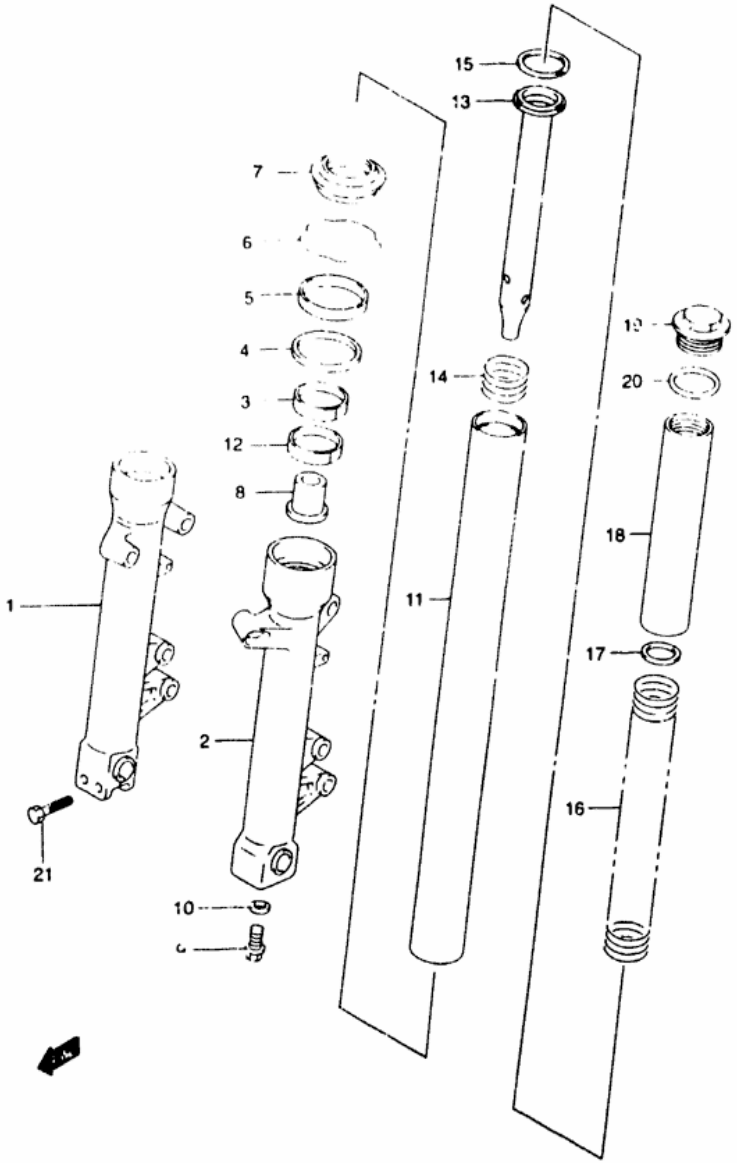

FIG 50 (1- 2) FRONT FORK DAMPER

REF.NO.	PART NO.	DESCRIPTION	Q'TY	REMARKS
	51103-20F20	DAMPER ASSY, FRONT FORK RH	1	SV650X/Y
	51104-20F20	DAMPER ASSY, FRONT FORK LH	1	SV650X/Y
1	51130-20F00	TUBE, OUTER RH	1	
2	51140-20F00	TUBE, OUTER LH	1	
3	51167-26E10	METAL, SLIDE	2	
4	51158-05A00	WASHER	2	
5	51153-14F00	SEAL, OIL	2	
6	51156-49440	CIRCLIP	2	
7	51173-14F00	SEAL, DUST	2	
8	51195-33D10	PIECE, OIL LOCK	2	
9	51147-16510	BOLT	2	
10	51148-41310	WASHER	2	
11	51110-20F00	TUBE, INNER	2	
12	51121-33D10	PISTON	2	
13	51146-20F20	CYLINDER	2	SV650X/Y
14	51177-06C00	SPRING	2	
15	51196-33D10	RING, PISTON	2	
16	51171-19F	SPRING, FRONT	2	
17	51356-10D0	WASHER	2	
18-1	51176-20F20	SPACER, SPRING	2	SV650X/Y
19	51351-33D00	CAP	2	
20	09280-32001	O RING	2	
21	01550-08457	BOLT, RH	2	

AIR CLEANER..... C-08 CRANKCASE COVER.... B-07 FRONT BRAKE HOSE... I-07 GEAR SHIFTING..... D-12 OPTIONAL..... J-07 REAR WHEEL..... J-04 TRANSMISSION..... D-10
BATTERY..... E-04 CRANKCASE..... B-05 FRONT CALIPER..... I-04 HANDLE BAR..... H-02 RADIATOR HOSE..... D-07 SEAT TAIL COVER.... H-11 TURNSIGNAL LAMP.... F-06

FIG.55

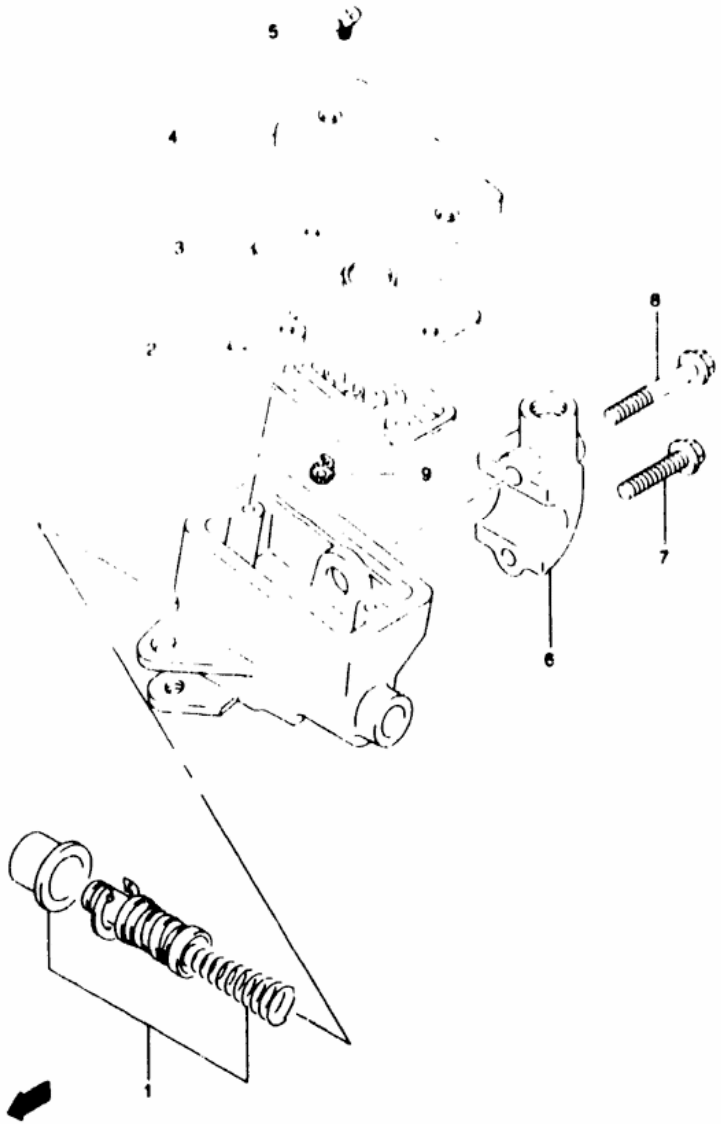

FIG 55 (I- 8) FRONT MASTER CYLINDER (SV650X/Y)

REF.NO.	PART NO.	DESCRIPTION	Q'TY	REMARKS
	59600-20C20	CYLINDER ASSY. FRONT MASTER	1	
1	59600-45860	PISTON/CUP SET	1	
2	59667-49460	DIAPHRAGM	1	
3	59668-41C00	PLATE DIAPHRAGM	1	
4	59669-41C00	CAP	1	
5	69689-49300	SCREW	2	
6	59671-44300	HOLDER	1	
7	59675-19C00	BOLT HOLDER (6X25)	1	
8	59675-19C10	BOLT HOLDER (6X38)	1	
9	59664-48B00	PROTECTOR	1	

REFER TO FIG 55A(I-9) FOR SV650 SX SY E28

FIG.55A

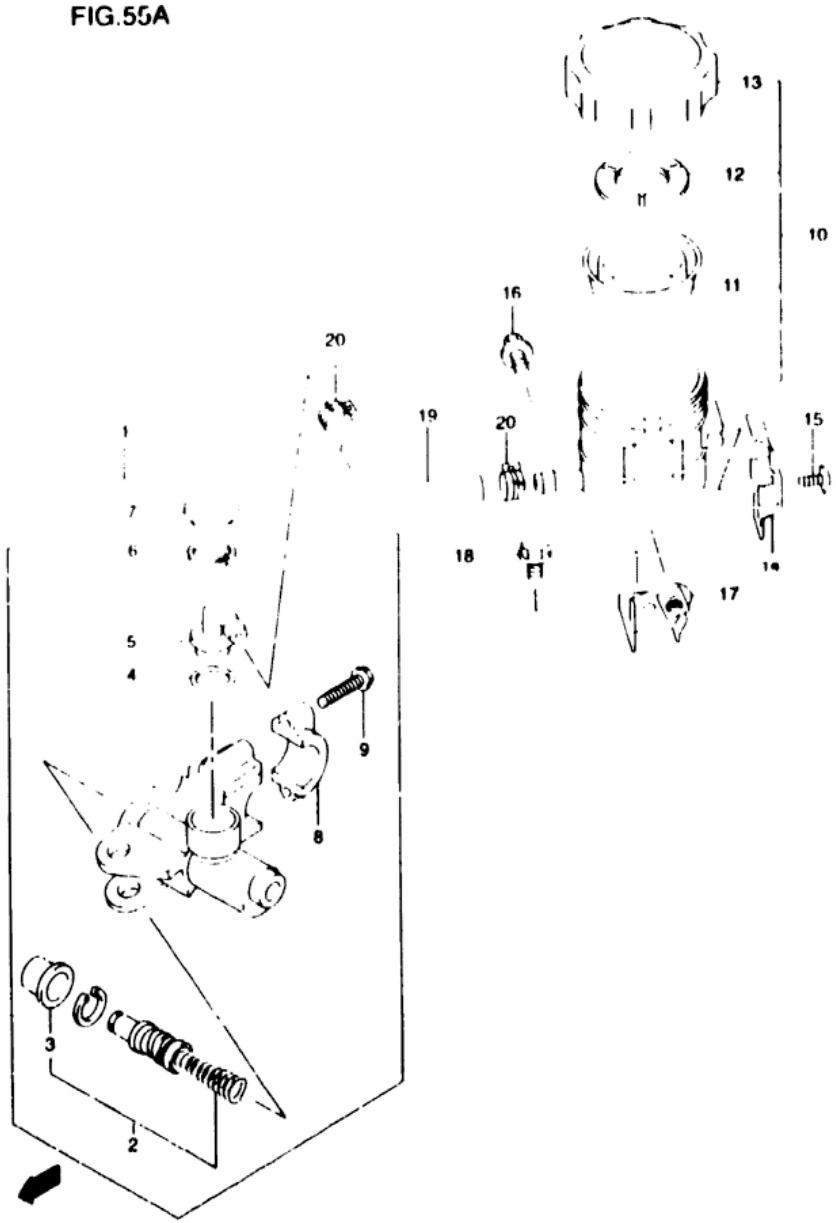

FIG 55A(1-9) FRONT MASTER CYLINDER (SV650SX/SY E28) CANADA ONLY

REF.NO.	PART NO.	DESCRIPTION	Q'TY	REMARKS
1	59600-32C01	CYLINDER ASSY FRONT MASTER	1	
2	59600-45B60	PISTON/CUP SET	1	
3	59666-44300	BOOT	1	
4	69686-34200	O RING	1	
5	59672-17C00	CONNECTOR	1	
6	59674-04B20	CIRCLIP	1	
7	59673-17C00	COVER DUST	1	
8	59671-36500	HOLDER (BLACK)	1	
9	59675-19C00	BOLT HOLDER (6×25)	2	
10	59740-07D00	TANK ASSY RESERVOIR	1	
11	59667-18441	DIAPHRAGM	1	
12	59668-18441	PLATE DIAPHRAGM	1	
13	59669-07D00	CAP	1	
14	59743-17C00	PLATE RESERVOIR TANK CAP	1	
15	02142-04103	SCREW	1	
16	01550-06123	BOLT	1	
17	59750-33E01	BRACKET RESERVOIR TANK FRONT	1	
18	01550-06123	BOLT	1	
19	59731-32C00	HOSE FRONT RESERVOIR TANK	1	
20	59735-17C00	CLAMP RESERVOIR TANK	2	

AIR CLEANER..... C-08
BATTERY..... E-04
CRANKCASE COVER.... B-07
CRANKCASE..... B-05
FRONT BRAKE HOSE... I-07
FRONT CALIPER..... I-06
GEAR SHIFTING..... D-12
HANDLE BAR..... H-02
OPTIONAL..... J-07
RADIATOR HOSE..... D-07
REAR WHEEL..... J-04
SEAT TAIL COVER.... H-11
TRANSMISSION..... D-10
TURNSIGNAL LAMP.... F-06

FIG.52

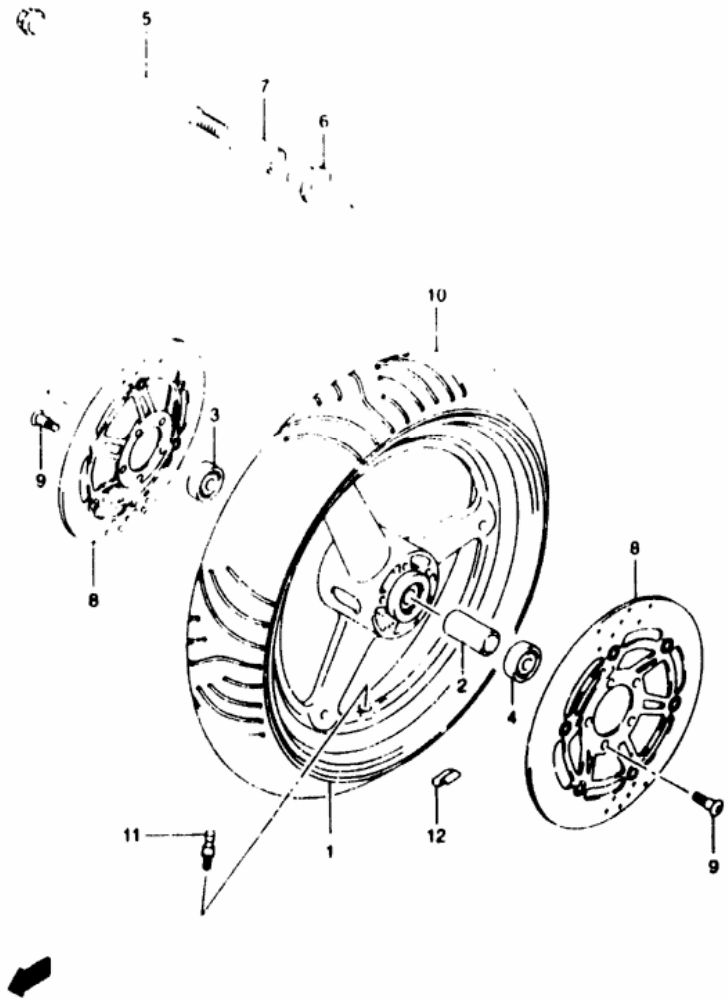

FIG 52 (I- 5) FRONT WHEEL

REF.NO.	PART NO.	DESCRIPTION	Q'TY	REMARKS
1-1	54111-03FA0-Y6G	WHEEL FRONT (17XMT3.50) (SILVER)	1	MODEL X
1-2	54111-03FA0-12R	WHEEL FRONT (17XMT3.50) (SILVER)	1	MODEL X
2	09180-17094	SPACER (17.5X22.5X[illegible])	1	
3	08133-62037	BEARING RH	1	
4	08113-62037	BEARING LH	1	
5	54711-07F00	AXLE FRONT	1	
6	54740-32[illegible]0	SPACER FRONT AXLE RH	1	
7	54741-03FA0	SPACER FRONT AXLE RH	1	
8	5921[illegible]-08F00	DISC FRONT BRAKE	2	
9	091[illegible]-08125	BOLT (8X[illegible])	[illegible]	
10	5511[illegible]-20F[illegible]	TIRE FRONT [illegible] METZELER	1	
11	431[illegible]-24A[illegible]	VALVE A[illegible] WHEEL R[illegible]	1	
12-1	55411-00A00	BALANCER WHEEL [illegible]	[illegible]	
12-2	55412-00A01	BALANCER WHEEL [illegible]	[illegible]	

FIG.36

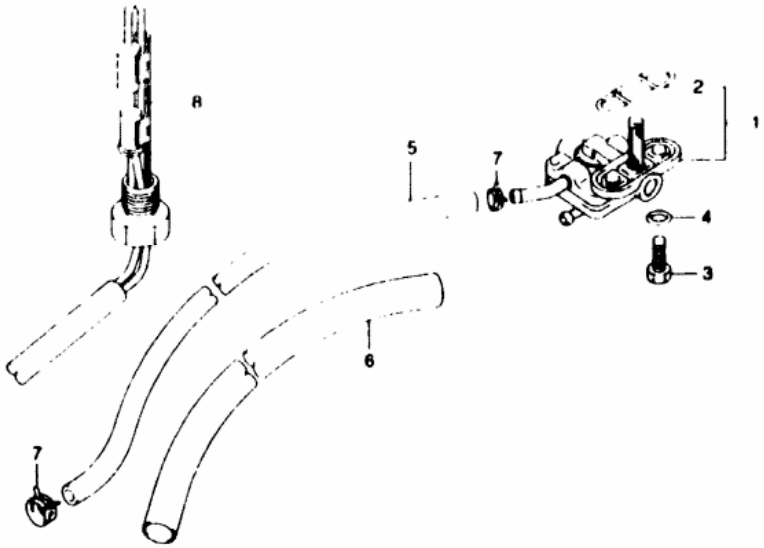

FIG 36 (G-7) FUEL COCK

REF.NO.	PART NO.	DESCRIPTION	Q'TY	REMARKS
1	44300-19F00	COCK ASSY. FUEL	1	
2	44351-33E00	O RING, JOINT	1	
3	09128-06U57	BOLT	2	
4	09168-06026	GASKET (6.4X11.5X0.8)	2	
5	09355-50105-600	HOSE FUEL (L 600 φ340)	1	
6	09351-14152-600	PROTECTOR (L 600 φ280)	1	
7	09401-09403	CLIP	2	
8	34810-19F10	GAUGE ASSY FUEL LEVEL	1	

FIG.35

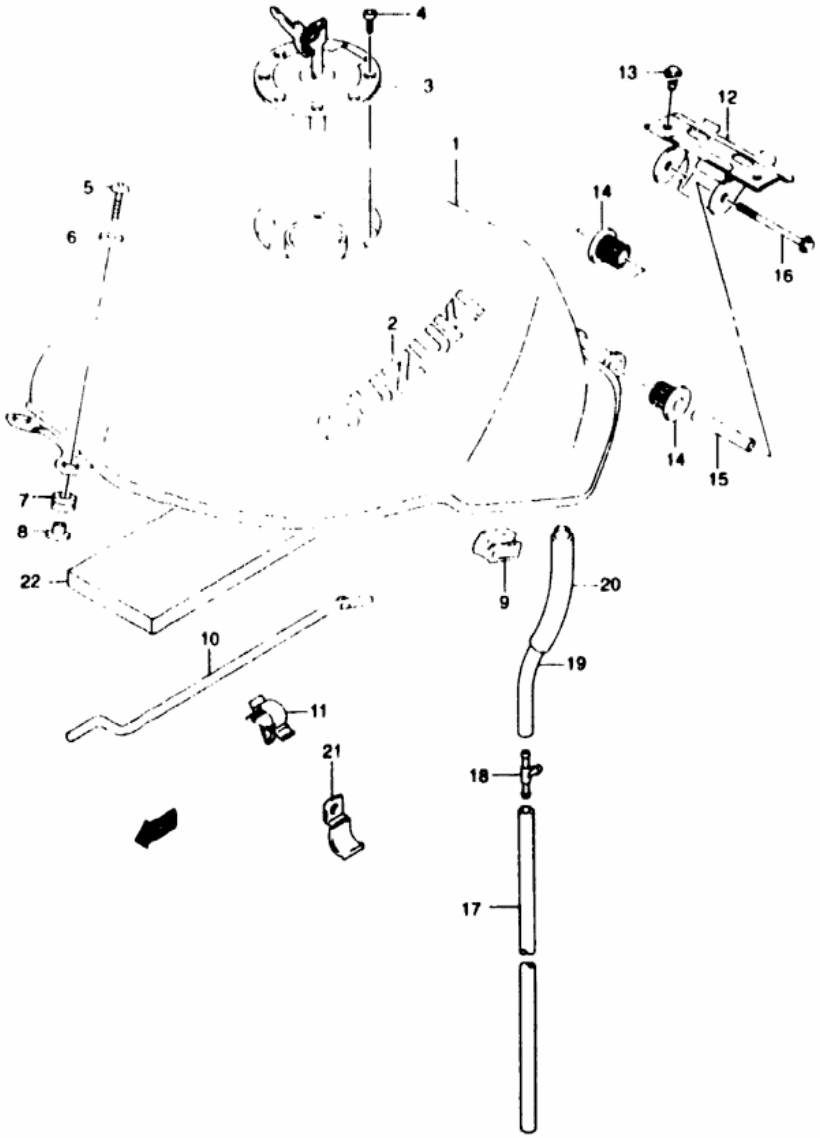

FIG 35 (G- 5) FUEL TANK (MODEL X)

REF.NO.	PART NO.	DESCRIPTION	Q'TY	REMARKS
1-1	44100-19F00-Y7E	TANK ASSY. FUEL (BLUE)	1	
1-2	44100-19F00-Y7M	TANK ASSY FUEL (RED)	1	
1-3	44100-19F20-Y7E	TANK ASSY FUEL (BLUE)	1	E33
1-4	44100-19F20-Y7M	TANK ASSY FUEL (RED)	1	E33
2-1	68111-42E00-2ZG	EMBLEM FUEL TANK (GRAY)	2	FOR Y7M
2-2	68111-42E00-1ZY	EMBLEM FUEL TANK (GRAY)	2	[illegible]
3-1	44200-33870	CAP SET FUEL TANK	1	
3-2	44200-33890	CAP SET FUEL TANK	1	E33
4	09106 05017	BOLT (L 20)	4	
5	09139 06[illegible]09	SCREW (5×[illegible]5)	2	
6	09[illegible]60-06054	WASHER ([illegible])	2	
7	[illegible] 19F00	CUSHION FRONT	2	
8	44512-19F00	CUSHION FRONT	2	
9	44559-19F00	CUSHION FUEL TANK SIDE	2	
10	44574-33E01	STAY FUEL TANK	1	
11	09403-05310	CLAMP	1	
12	44550-19F10	BRACKET FUEL TANK REAR	1	
13	01550-08163	BOLT	2	
14	44541-02F00	CUSHION, FUEL TANK REAR	2	
15	44561-19F00	SPACEER FUEL TANK REAR	1	
16	01550-08853	BOLT	1	
17	09352-70103-600	HOSE, NO 2 (L 600→480)	1	
18	09367-08004	JOINT, 3 WAY	1	
19	09352-70103-600	HOSE, NO 1 (L 600 →160)	1	
20	09351-14152-600	PROTECTOR (L 600→140)	1	
21	44339-19F00	CLAMP, DRAIN HOSE	1	
22	44194-19F00	SHIELD, TANK FRONT	1	

REFER TO FIG 35A(G-6) FOR MODEL Y

FIG.35A

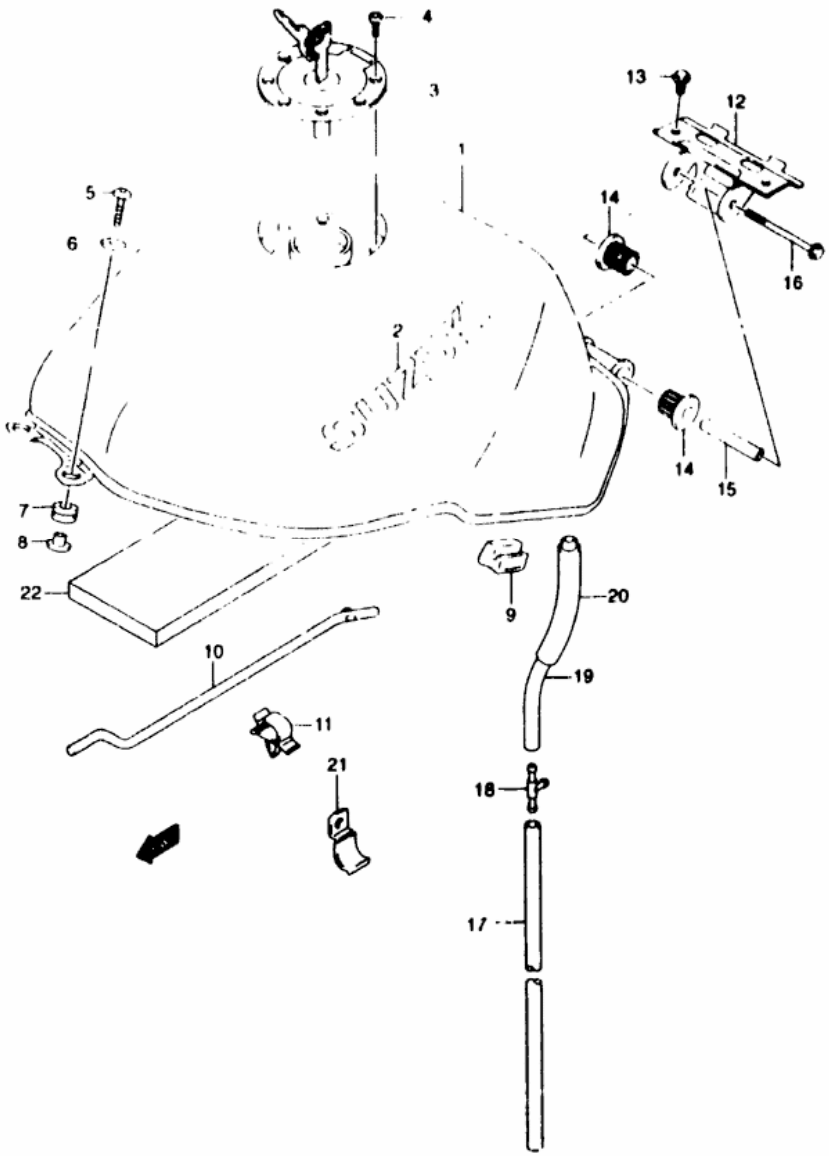

FIG 35A(G- 6) FUEL TANK (MODEL Y)

REF.NO.	PART NO.	DESCRIPTION	Q'TY	REMARKS
1-2	44100-19F40-Y7M	TANK ASSY. FUEL (RED)	1	
1-4	44100-19F40-YC2	TANK ASSY. FUEL (BLUE)	1	
1-6	44100-19F50-Y7M	TANK ASSY FUEL (RED)	1	E33
1-8	44100-19F50-YC2	TANK ASSY FUEL (BLUE)	1	E33
2-1	68111-12C00-1ZY	EMBLEM FUEL TANK (GRAY)	2	FOR Y7L YC2
2-2	68111-12C00-20G	EMBLEM FUEL TANK (GRAY)	2	FOR Y7M
3-1	44200-33870	CAP SET FUEL TANK	1	
3-2	44200-33890	CAP SET FUEL TANK	1	E33
4	09106-05017	BOLT (L 20)	4	
5	09139-[illegible]	SCREW (5X20)	2	
6	09160-06054	WASHER (6.5X22X1.0)	2	
7	44511-19F00	CUSHION FRONT	2	
8	44512-19F00	CUSHION FRONT	2	
9	44559-19F00	CUSHION FUEL TANK SIDE	2	
10	44574-33E01	STAY FUEL TANK	1	
11	09403-05310	CLAMP	1	
12	44550-19F10	BRACKET FUEL TANK REAR	1	
13	01550-08163	BOLT	2	
14	44541-02F00	CUSHION FUEL TANK REAR	2	
15	44561-19F00	SPACEER FUEL TANK REAR	1	
16	01550-08853	BOLT	1	
17	09352-70103-600	HOSE NO 2 (L 600 →480)	1	
18	09367-08004	JOINT 3 WAY	1	
19	09352-70103-600	HOSE NO 1 (L 600→160)	1	
20	09351-14152-600	PROTECTOR (L 600 →140)	1	
21	44339-19F00	CLAMP DRAIN HOSE	1	
22	44194-19F00	SHIELD TANK FRONT	1	

FIG.21

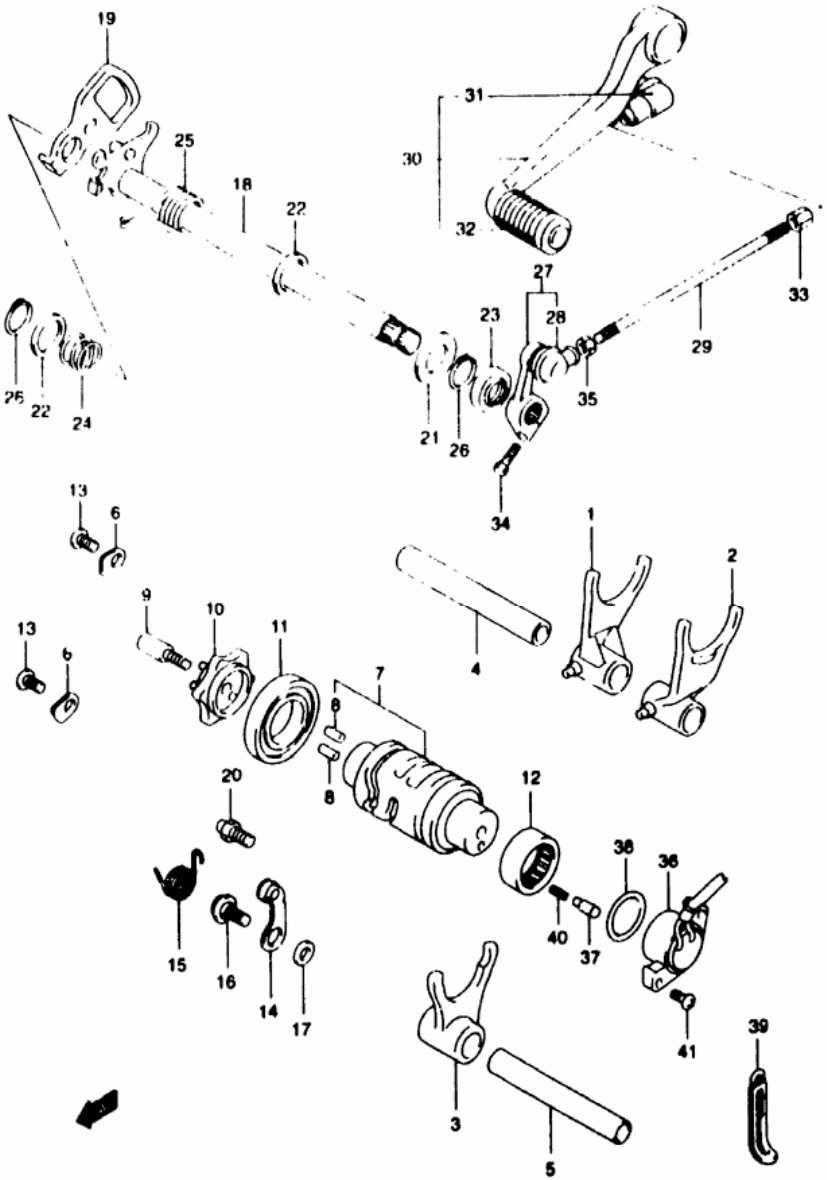

FIG 21 (D-12) GEAR SHIFTING

REF.NO.	PART NO.	DESCRIPTION	Q'TY	REMARKS
1	25211-42E10	FORK, GEAR SHIFT NO 1	1	
2	25221-42E10	FORK, GEAR SHIFT NO 2	2	
3	25231-42E10	FORK, GEAR SHIFT NO 3	1	
4	25411-26D01	SHAFT, GEAR SHIFT FORK NO 1	1	
5	25411-44B00	SHAFT, GEAR SHIFT FORK NO 2	1	
6	24741-21A00	RETAINER, SHIFT CAM BEARING	2	
7	25310-19F00	CAM, GEAR SHIFT	1	
8	04221-04089	KNOCK PIN	2	
9	25312-12C00	PIN, SHIFT CAM DRIVEN GEAR	1	
10	25381-19F00	PLATE, GEAR SHIFT CAM	1	
11	09262-25006	BEARING (25X47X8)	1	
12	09263-25018	BEARING (25X32X12)	1	
13	02112-06123	SCREW	2	
14	25350-24B00	STOPPER, GEAR SHIFT CAM	1	
15	25355-20F00	SPRING, STOPPER ARM	1	
16	09111-06041	BOLT (6X14.3)	1	
17	08211-06141	WASHER	1	
18	25510-19F00	SHAFT, GEAR SHIFT	1	
19	25512-13E11	PLATE, GEAR SHIFT CAM DRIVE	1	
20	25671-01000	STOPPER, RETURN SPRING	1	
21	09160-14016	WASHER (14X29X0.8)	1	
22	09181-14167	SHIM	2	
23	09283-14006	OIL SEAL (14X22X6)	1	
24	09440-17009	SPRING	1	
25	09444-20001	SPRING	1	
26	08331-31146	CIRCLIP	1	
27	25520-29B00	ARM, GEAR SHIFT LINK	1	
28	25526-47000	COVER, DUST	1	
29-1	25525-19F00	ROD, GEAR SHIFT (L 150)	1	SV650X
29-2	25525-05A10	ROD, GEAR SHIFT (L 175)	1	SV650SX E28
30	25600-33E00	LEVER ASSY, GEAR SHIFT	1	
31	25526-47000	COVER, DUST	1	
32	25652-20C00	RUBBER, GEAR SHIFT PEDAL	1	

FIG.21

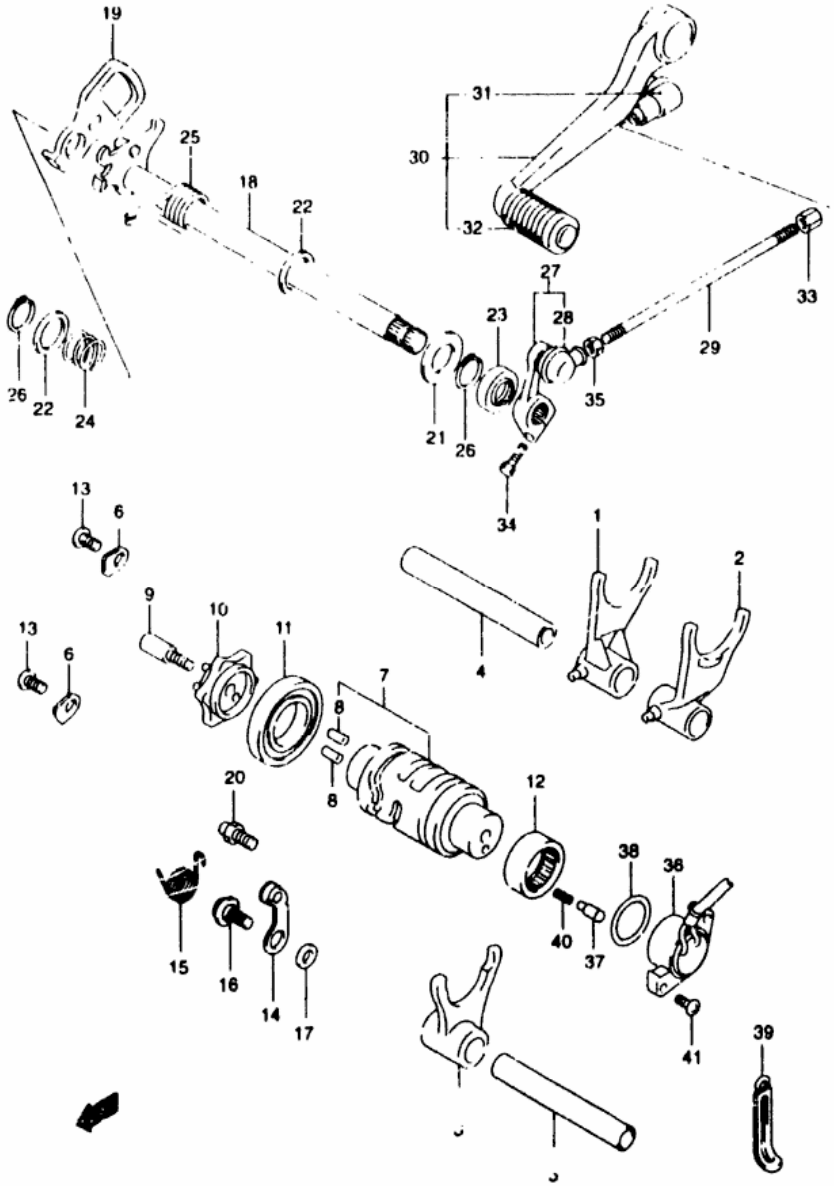

FIG 21 (D-13) GEAR SHIFTING

REF.NO.	PART NO.	DESCRIPTION	Q'TY	REMARKS
33	09140-0601[illegible]	NUT	1	
34	01500-06203	BOLT	1	
35	08310-00067	NUT	1	
36	37720-20F00	BASE ASSY. GEAR SHIFT TERMINAL	1	
37	09[illegible]-05011	CONTACT	2	
38	09[illegible]-26007	O RING (OD 2 4 ID 25 7)	1	
39	[illegible]404-08206	CLAMP (L 82[illegible]	1	
40	[illegible]440-04010	SPRING	2	
41	02112-05163	SCREW	2	

FIG.27

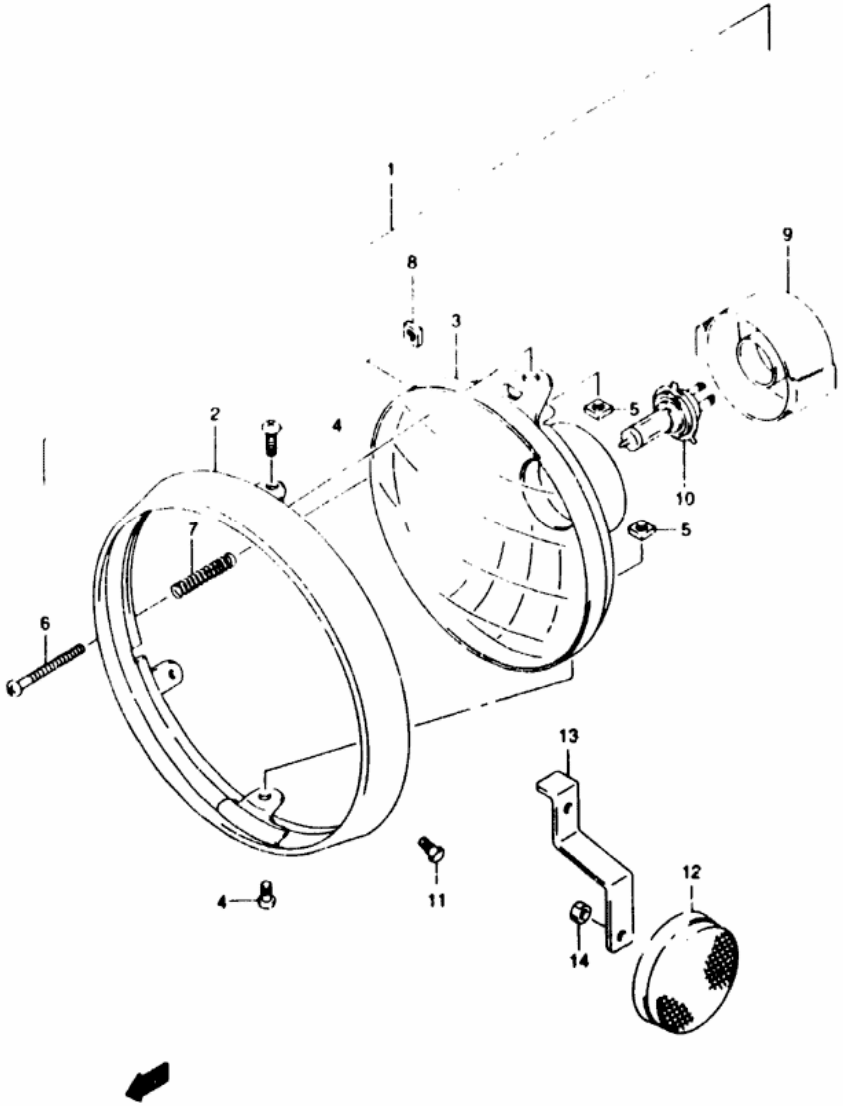

FIG 27 (F- 4) HEADLAMP (SV650X/Y)

REF.NO.	PART NO.	DESCRIPTION	Q'TY	REMARKS
1	35100-19F00-999	HEADLAMP ASSY	1	
2	35111-19F00	RIM	1	
3	35121-19F00	LAMP UNIT	1	
4	35181-19F00	SCREW (5X16)	2	
5	35135-45900	NUT	2	
6	35151-19F00	SCREW ADJUSTING	1	
	35154-13F00	SPRING	1	
8	35152-45600	NUT	1	
9	35174-19F00	COVER, SOCKET	1	
10	09471-12185	BULB (12V 60/55W)	1	
11	09139-05038	SCREW	2	
12	35950-14A00	REFLEX REFLECTOR ASSY	2	
13	35956-19F00	BRACKET FRONT SIDE RR	2	
14	08310-00053	NUT	2	

REFER TO FIG 27A(F-5) FOR SV650SX/SY E28

FIG.27A

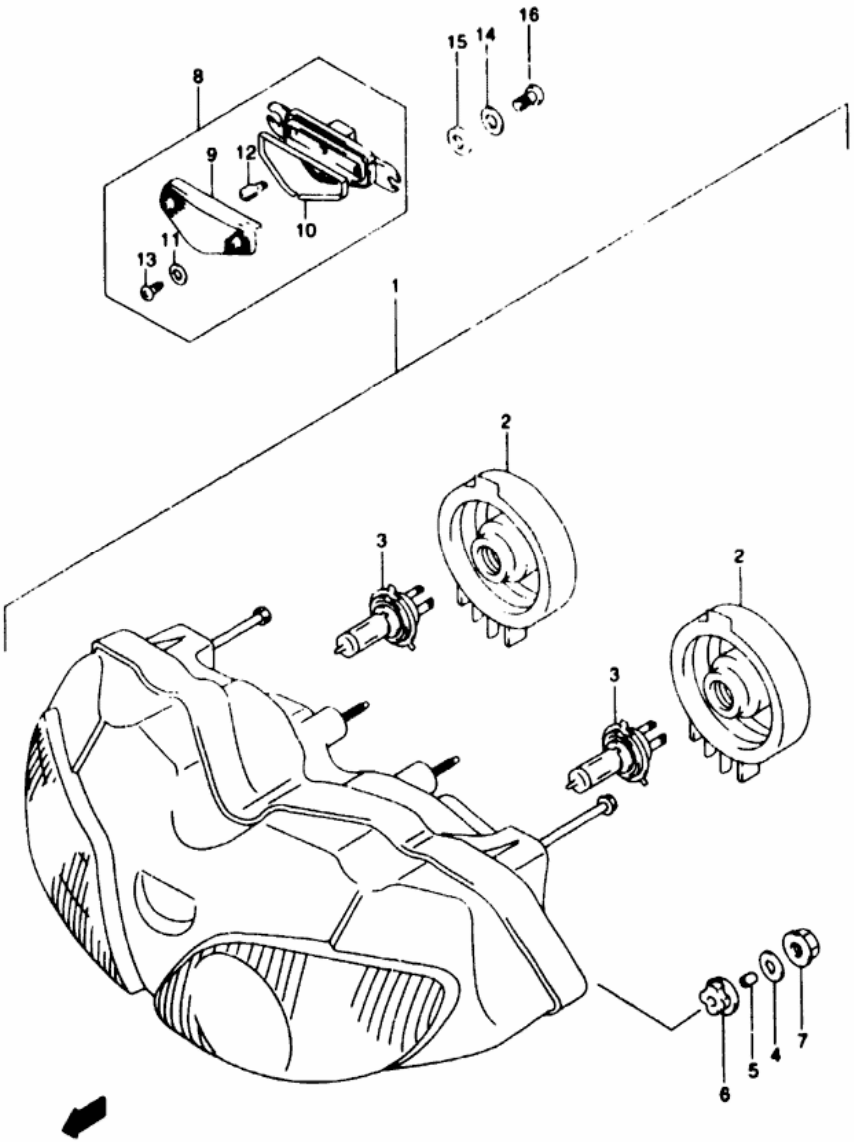

FIG 27A(F- 5) HEADLAMP (SV650SX/SY E28)

REF.NO.	PART NO.	DESCRIPTION	Q'TY	REMARKS
	35100-20F30-999	HEADLAMP ASSY	1	
2	35125-02F00	COVER, SOCKET	2	
3	09471-12102	BULB (12V,44W/45W)	2	
4	09160-06088	WASHER (6.5X20X1.6)	4	
5	09180-06267	SPACER (6.5X9X12.5)	4	
6	09320-09010	CUSHION	4	
7	08316-10063	NUT	4	
8	36110-20F00	LAMP ASSY FRONT POSITION	1	
9	36112-05F00	LENS	1	
10	36113-20F00	GASKET	1	
11-1	36117-08F00	WASHER	2	MODEL X
11-2	36128-37B00	WASHER	2	MODEL Y
12	09471-12081	BULB (12V,5W)	1	
13	03211-04123	SCREW	2	
14	09161-05045	WASHER (5.5X18X1.0)	2	
15	09320-08001	CUSHION	2	
16	03511-05103	SCREW	2	

AIR CLEANER..... C-08
BATTERY..... E-04
CAM CHAIN..... C-04
CAM SHAFT / VALVE.. C-03
CRANKCASE COVER.... B-07
CRANKCASE..... B-05
CRANKSHAFT..... B-08
CYLINDER..... B-06
FRONT BRAKE HOSE... I-07
FRONT CALIPER..... I-06
FRONT CYLINDER HEAD B-02
FRONT FENDER..... G-11
GEAR SHIFTING..... D-12
HANDLE BAR..... H-02
HANDLE LEVER..... H-04
HANDLE SWITCH..... E-11
OPTIONAL..... J-07
RADIATOR HOSE..... D-07
RADIATOR..... D-06
REAR CALIPER..... J-05
REAR WHEEL..... J-04
SEAT TAIL COVER.... H-11
SEAT..... H-10
SPEEDOMETER..... F-02
TRANSMISSION..... D-10
TURNSIGNAL LAMP.... F-06
WARNING LABEL..... H-09
WATER PUMP..... D-04

FIG.39

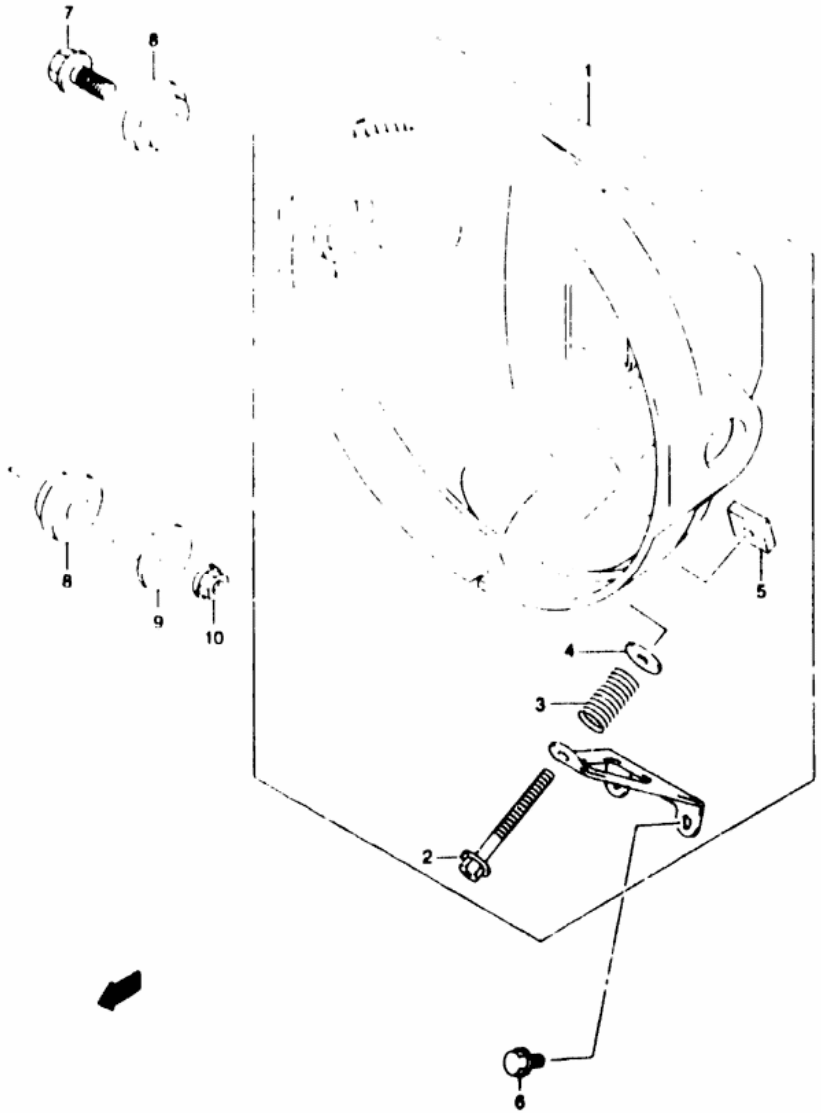

FIG 39 (G-10) HEADLAMP HOUSING (SV650X/Y)

REF.NO.	PART NO.	DESCRIPTION	Q'TY	REMARKS
1	51800-19F00	HOUSING ASSY HEADLAMP	1	
2	51858-25D00	BOLT HEADLAMP ADJUSTER	1	
3	51837-25D00	SPRING HEADLAMP ADJUSTER	1	
4	08322-01053	WASHER	1	
5	51825-25D00	NUT HEADLAMP ADJUSTER	1	
6	01550-05123	BOLT	4	
7	01244-08357	BOLT	2	
8	09320-12065	CUSHION	4	
9	09180-08168	SPACER (8.6×12×20)	2	
10	08316-10083	NUT	2	

AIR CLEANER..... C-08
BATTERY..... E-04
CAM CHAIN..... C-04
CRANKCASE COVER.... B-07
CRANKCASE..... B-05
CRANKSHAFT..... B-08
FRONT BRAKE HOSE... I-07
FRONT CALIPER..... I-06
FRONT CYLINDER HEAD B-02
GEAR SHIFTING..... D-12
HANDLE BAR..... H-02
HANDLE LEVER..... H-04
OPTIONAL..... J-07
RADIATOR HOSE..... D-07
RADIATOR..... D-06
REAR WHEEL..... J-04
SEAT TAIL COVER.... H-11
SEAT..... H-10
TRANSMISSION..... D-10
TURNSIGNAL LAMP.... F-06
WARNING LABEL..... H-09

FIG.41

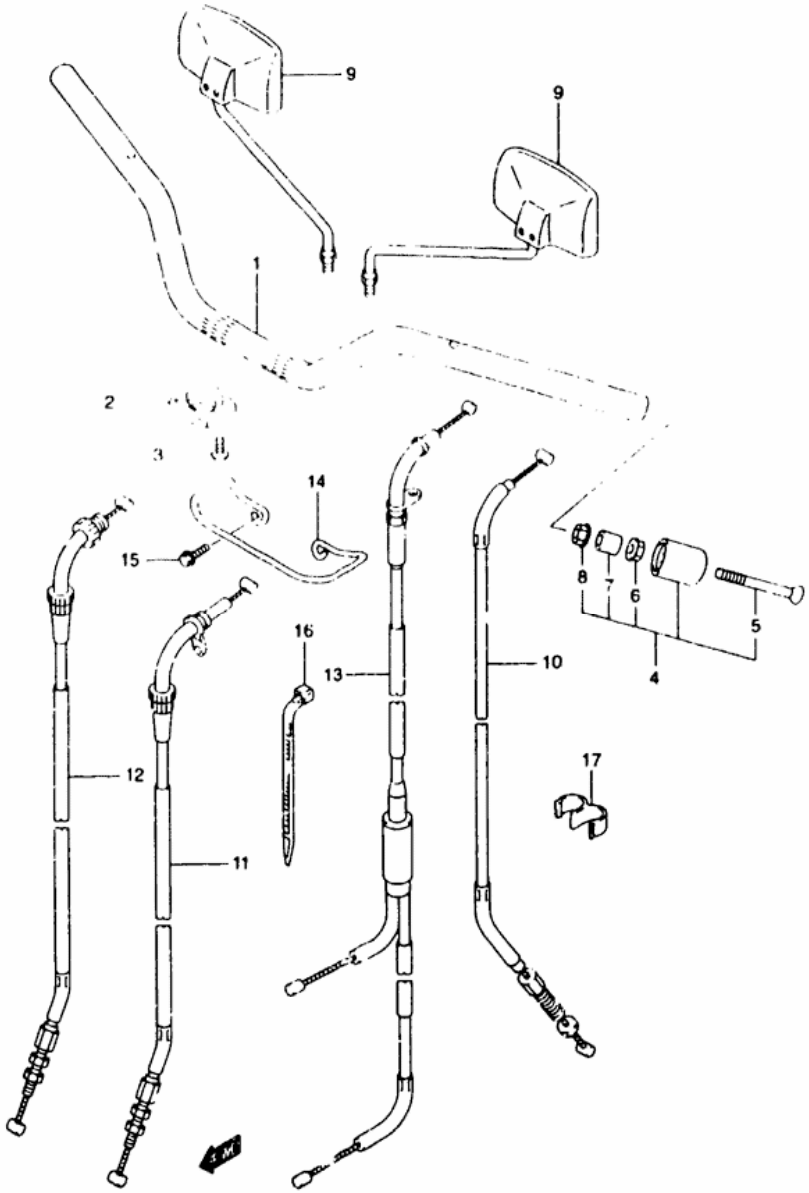

FIG 41 (H- 2) HANDLE BAR (SV650X/Y)

REF.NO.	PART NO.	DESCRIPTION	Q'TY	REMARKS
1	56111-19F20	HANDLE BAR	1	
2	56170-19F00	COVER, IGNITION SWITCH	1	
3	02142-04123	SCREW	2	
4	56200-32821	BALANCER SET, HANDLE BAR	2	
5	02122-06803	SCREW	2	
6	08316-10083	NUT	2	
7	56272-44500	EXPANDER HANDLE BALANCER	2	
8	09159-06024	NUT	2	
9	56500-09020	MIRROR ASSY, REAR VIEW	2	
10	58200-20F00	CABLE ASSY CLUTCH	1	
11	58300-20F20	CABLE ASSY, THROTTLE NO 1	1	
12	58300-20F30	CABLE ASSY THROTTLE NO 2	1	
13	58410-20F00	CABLE STARTER	1	
14	58621-19F00	GUIDE CABLE	1	
15	01550-06123	BOLT	2	
16	09407-14407	CLAMP	1	
17	09408-00033	CLIP	1	

REFER TO FIG 41A(H-3) FOR SV650SX/SY E28

AIR CLEANER..... C-08
BATTERY..... E-04
CRANKCASE COVER.... H-07
CRANKCASE..... B-L
FRONT BRAKE HOSE... I-07
FRONT CALIPER..... I-06
GEAR SHIFTING..... D-12
HANDLE BAR..... H-02
OPTIONAL..... J-07
RADIATOR HOSE..... D-07
REAR WHEEL..... J-04
SEAT TAIL COVER.... H-11
TRANSMISSION..... D-10
TURNSIGNAL LAMP.... F-06
WARNING LABEL..... H-09

FIG.26

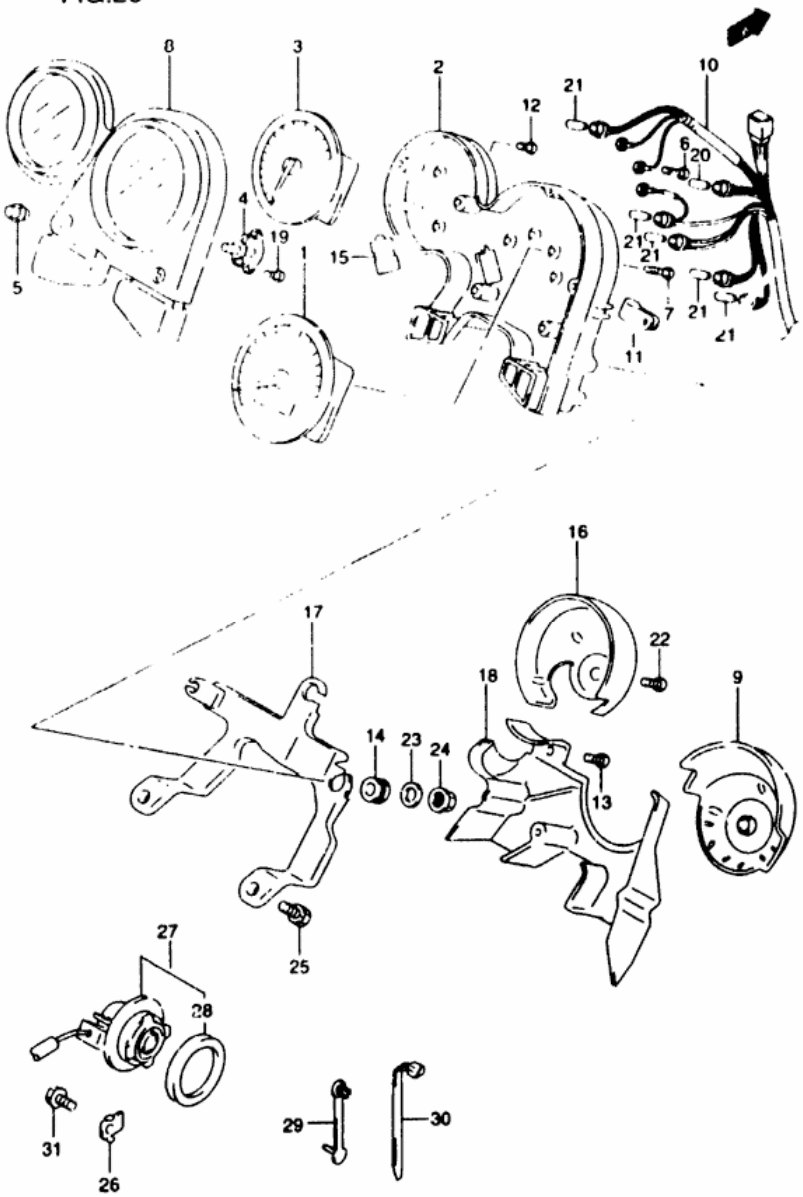

FIG 26 (F-2) SPEEDOMETER (SV650X/Y)

REF.NO.	PART NO.	DESCRIPTION	QTY	REMARKS
1	34110-20F10	SPEEDOMETER (MILE)	1	
2	34111-19F20	LOWER CASE	1	
3	34210-20F00	TACHOMETER	1	
4	34123-33E00	ATTACHMENT, SWITCH	1	
5	34124-33E00	SWITCH GUM	1	
6	34147-19F20	SCREW PAN HEAD (3X18)	3	
7	34149-19F20	SCREW PAN HEAD (3X20)	4	
8	34150-19F20	UPPER CASE	1	
9	34152-19F20	ORNAMENT SPEEDOMETER	1	
10	34173-19F20	CORD ASSY	1	
11	34176-19F20	CLAMP	1	
12	34183-09F00	SCREW (3X12)	3	
13	34183-19F20	SCREW HEAD TAPPING (4X16)	4	
14	34189-19F20	DAMPER	3	
15	34198-19F20	GROMMET	1	
16	34211-19F20	ORNAMENT TACHOMETER	1	
17	34950-19F20	BRACKET	1	
18	36383-19F20	COVER	1	
19	09132-03005	SCREW (3X10)	2	
20	09471-12077	BULB (12V 1.7W T10)	1	
21	09471-12108	BULB (12V 1.7W T6.5)	5	
22	03541-04163	SCREW	2	
23	09160-06056	WASHER (6.5X18X1)	3	
24	08310-00067	NUT	3	
25	01550-08163	BOLT	2	
26	34938-14F00	GUIDE, SENSOR LEAD	2	
27	34990-21E00	SENSOR, SPEED	1	
28	286-44001	SEAL, SENSOR OIL	1	
29	09407-03401	CLAMP	1	
30	09407-14407	CLAMP (L 145)	3	
31	01550-06123	BOLT	2	

REFER TO FIG.26A(F-3) FOR SV650SX/SY E28

31 SV650 Y E3/E33

AIR CLEANER..... C-08
BATTERY..... E-04
CAM CHAIN..... C-04
CAM SHAFT / VALVE.. C-03
CRANKCASE COVER.... B-07
CRANKCASE..... B-05
CRANKSHAFT..... B-08
CYLINDER..... B-04
FRONT BRAKE HOSE... I-07
FRONT CALIPER..... I-06
FRONT CYLINDER HEAD B-02
FRONT FENDER..... G-11
GEAR SHIFTING..... D-12
HANDLE BAR..... H-02
HANDLE LEVER..... H-04
HANDLE SWITCH..... E-11
OPTIONAL..... J-07
RADIATOR HOSE..... D-07
RADIATOR..... D-06
REAR CALIPER..... J-05
REAR WHEEL..... J-04
SEAT TAIL COVER.... H-11
SEAT..... H-10
SPEEDOMETER..... F-02
TRANSMISSION..... D-10
TURNSIGNAL LAMP.... F-06
WARNING LABEL..... H-09
WATER PUMP..... D-04

FIG.26A

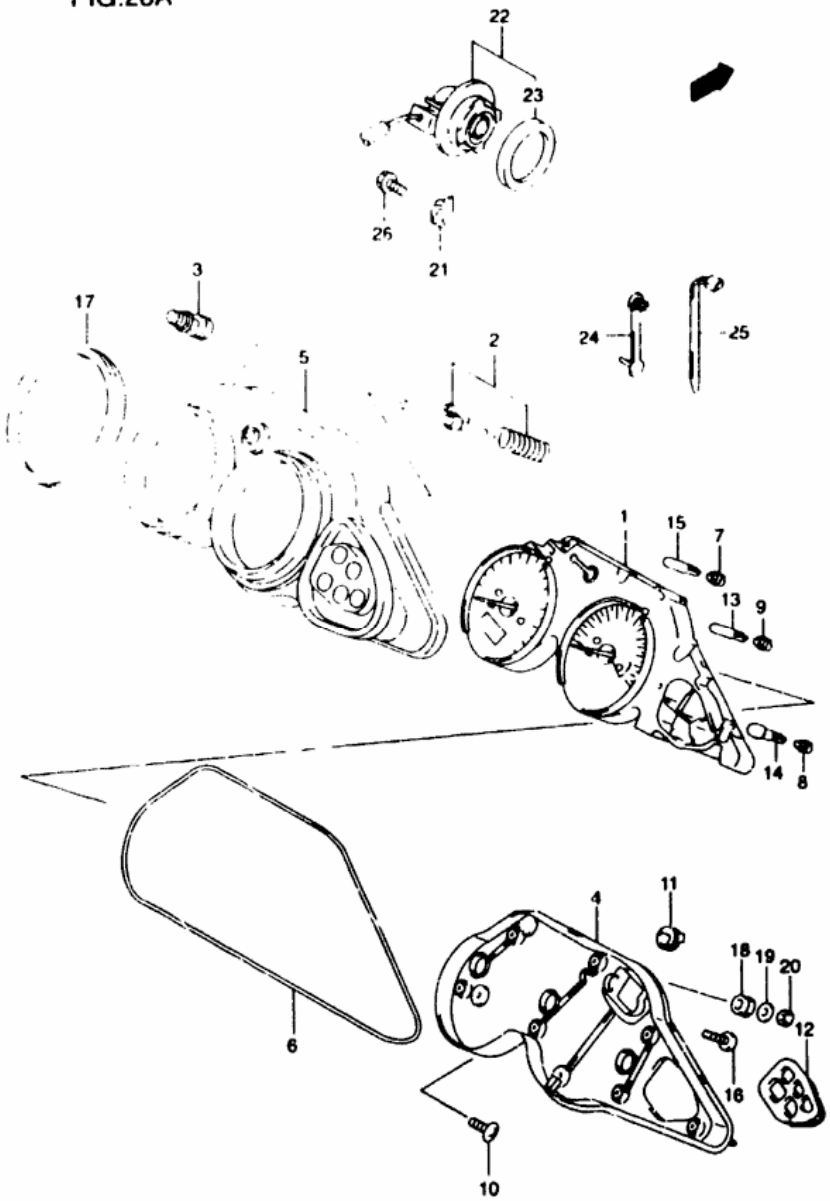

FIG 26A(F-3) SPEEDOMETER (SV650SX/SY E28)

REF.NO.	PART NO.	DESCRIPTION	Q'TY	REMARKS
1-1	34119-20F30	SPEEDOMETER	1	MODEL X
1-2	34119-20F31	SPEEDOMETER	1	MODEL Y
2	34123-02F00	LEVER	1	
3	34124-02F00	SWITCH GUM	1	
4	34130-02F00	CASE ASSY	1	
5	34150-19F00	VISOR	1	
6	34153-02F00	GASKET	1	
7	34172-71E70	SOCKET	3	
8	34173-19C00	SOCKET	3	
9	34173-19D70	SOCKET	2	
10	34183-33DC0	SCREW SPEEDOMETER (4x14)	2	
11	34198-02F00	BLIND CAP	3	
12	34198-02F10	BLIND	1	
13	09471-12085	BULB (14 / 3W)	2	
14	09471-12100	BULB (12 / 1.7W)	1	
15	09471-12189	BULB (14 / 0.84W)	3	
16	03211-04207	SCREW	6	
17	34188-02F00	CUSHION	2	
18	34996-43410	CUSHION	4	
19	09160-05037	WASHER (5.5x19x1.20)	4	
20	08310-00053	NUT	4	
21	34938-14F00	GUIDE SENSOR LEAD	1	
22	34990-21E00	SENSOR SPEED	1	
23	09286-44001	SEAL, SENSOR	1	
24	09407-03401	CLAMP	1	
25	09407-14407	CLAMP (L 145)	3	
26	01550-06123	BOLT	2	

AIR CLEANER..... C-08
BATTERY..... E-04
CAM CHAIN..... C-04
CAM SHAFT / VALVE.. C-03
CRANKCASE COVER.... B-07
CRANKCASE..... B-05
CRANKSHAFT..... B-08
CYLINDER..... B-06
FRONT BRAKE HOSE... I-07
FRONT CALIPER..... I-06
FRONT CYLINDER HEAD B-02
FRONT FENDER..... G-11
GEAR SHIFTING..... D-12
HANDLE BAR..... H-02
HANDLE LEVER..... H-04
HANDLE SWITCH..... E-11
OPTIONAL..... J-07
RADIATOR HOSE..... D-07
RADIATOR..... D-06
REAR CALIPER..... J-05
REAR WHEEL..... J-04
SEAT TAIL COVER.... H-11
SEAT..... H-10
SPEEDOMETER..... F-02
TRANSMISSION..... D-10
TURNSIGNAL LAMP.... F-06
WARNING LABEL..... H-09
WATER PUMP..... D-04

FIG.33

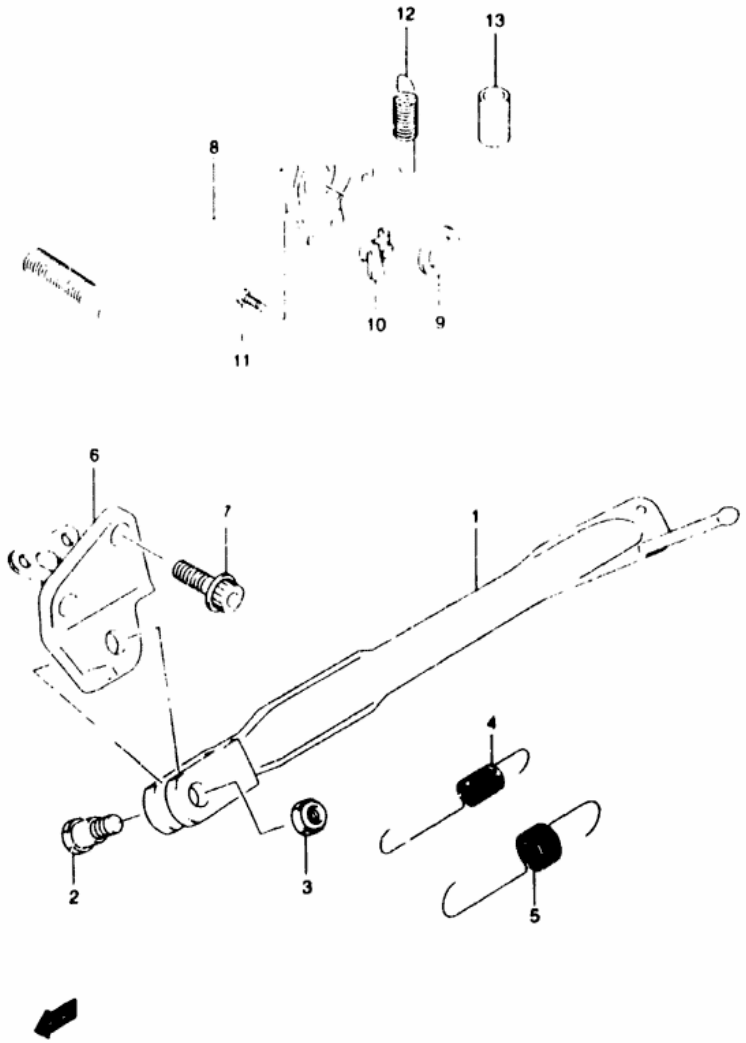

FIG 33 (G- 3) STAN.

REF.NO.	PART NO.	DESCRIPTION	Q'TY	REMARKS
1	42310-19F00	STAND, PROP	1	
2	09111-10027	BOLT	1	
3	08319-21103	NUT	1	
4	09443-14006	SPRING, INNER	1	
5	09443-19012	SPRING, OUTER	1	
6	42330-19F01	BRACKET, PROP STAND	1	
7	07120-10303	BOLT	2	
8	43111-33E00	PEDAL, BRAKE	1	
9	09160-18022	WASHER (18X24X1)	1	
10	43561-23E00	HOOK, RETURN SPRING	1	
11	02112-05163	SCREW	1	
12	09443-13029	SPRING	1	
13	43261-17C00	TUBE, SPRING GUIDE	1	

FIG.22

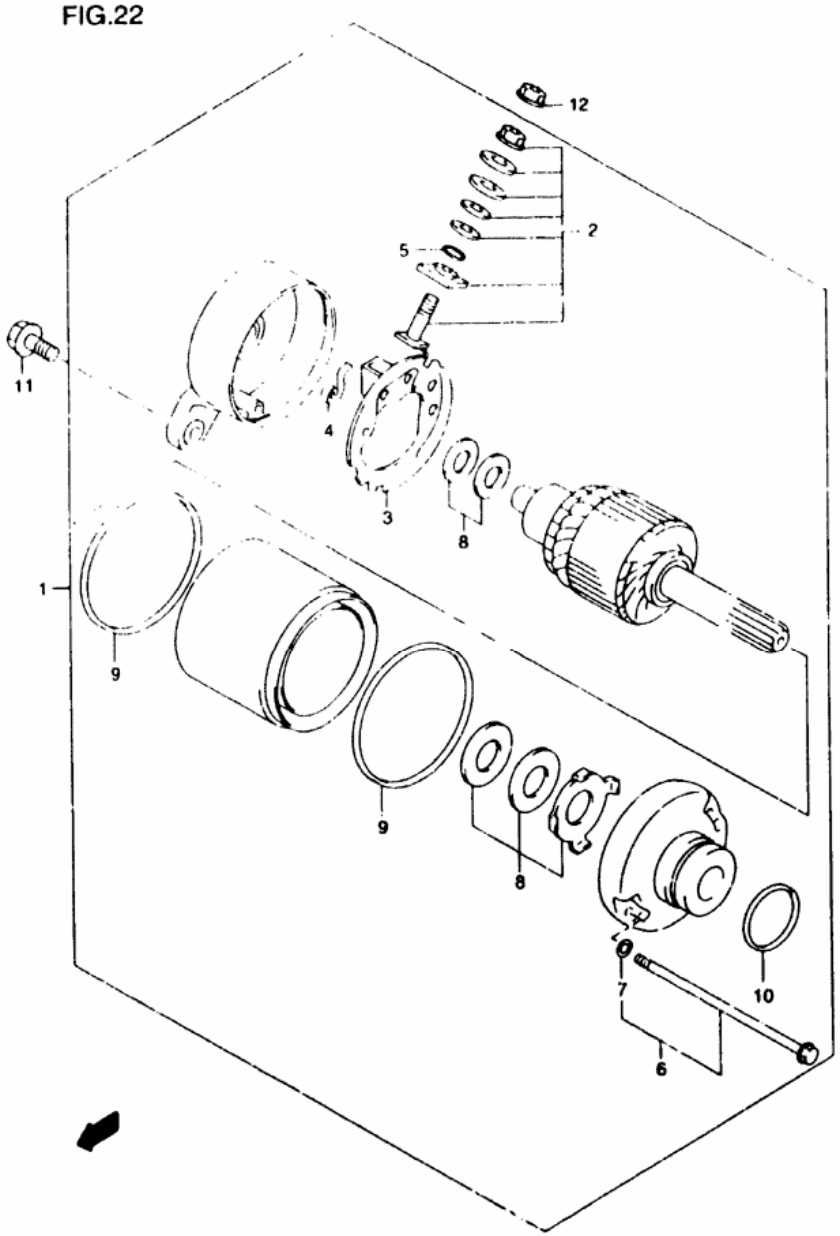

FIG 22 (E-2) STARTING MOTOR

REF.NO.	PART NO.	DESCRIPTION	Q'TY	REMARKS
*	31100-19F00	MOTOR ASSY STARTING	1	
2	31130-13E00	BRUSH TERMINAL SET	1	
3	31132-33E00	BRUSH HOLDER SET	1	
4	31135-31300	SPRING BRUSH	2	
5	31143-49040	O RING	1	
6	31280-19F00	SET BOLT ASSY	2	
7	31156-13E00	O RING	2	
8	31170-19B10	WASHER SET	1	
9	31264-13E00	O RING	2	
10	09280-25002	O RING (D 3 1 ID 24 4)	1	
11	01547-06253	BOLT	2	
12	08361-35068	NUT	1	

FIG.7

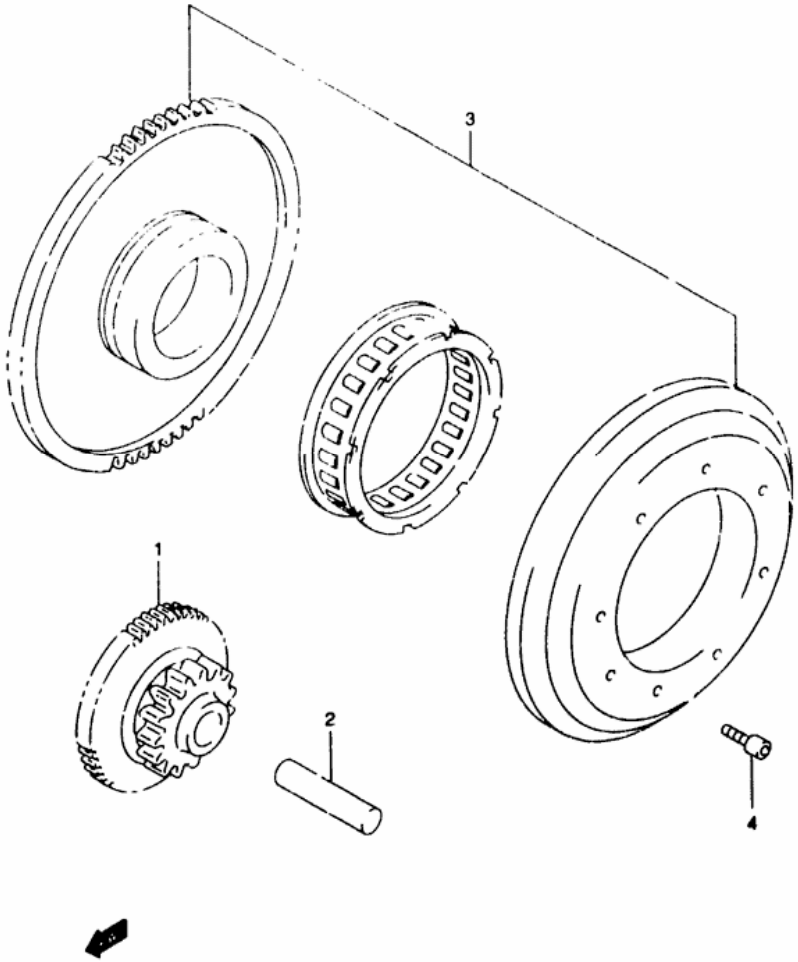

FIG.7 (C-2) STARTER CLUTCH

REF.NO.	PART NO.	DESCRIPTION	Q'TY	REMARKS
1	12611-20F01	GEAR, STARTER IDLE	1	
2	09206-12001	PIN	1	
3	12600-20840	CLUTCH SET, STARTER	1	
4	07130-08163	BOLT	6	

AIR CLEANER..... C-08 CRANKCASE COVER.... D-07 FRONT BRAKE HOSE... I-07 GEAR SHIFTING..... D-12 OPTIONAL..... J-07 REAR WHEEL..... J-04 TRANSMISSION..... D-10
BATTERY..... F-04 CRANKCASE..... B-05 FRONT CALIPER..... I-04 HANDLE BAR..... H-02 RADIATOR HOSE..... D-07 SEAT TAIL COVER.... H-11 TURNSIGNAL LAMP.... F-06

FIG.51

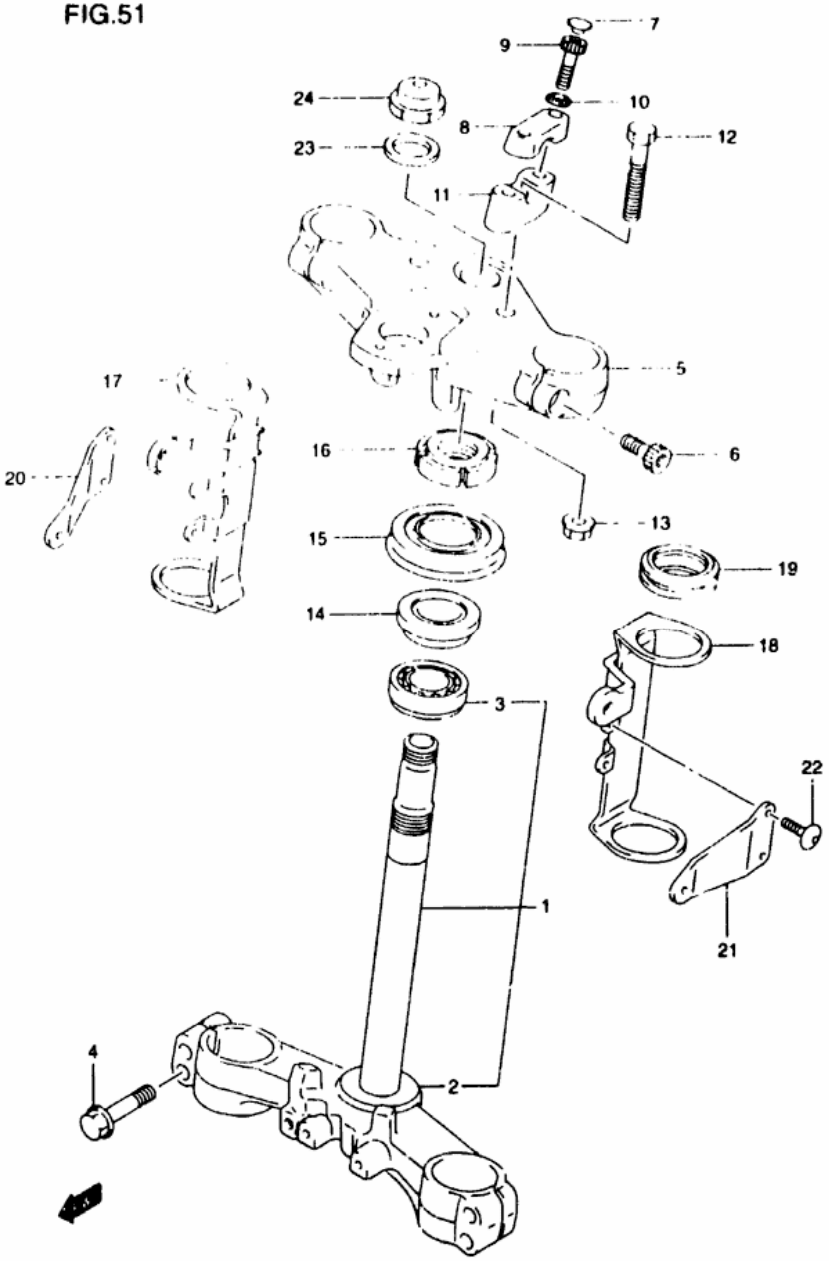

FIG 51 (I- 3) STEERING STEM (SV650X/Y)

REF.NO.	PART NO.	DESCRIPTION	Q'TY	REMARKS
1	51410-19F10	STEM, STEERING	1	
2	51644-12C00	SEAL, STEERING LOWER	1	
3	09267-30010	BEARING (30X55X17)	1	
4	01550-08407	BOLT	4	
5	51311-19F10	HEAD STEERING STEM	1	
6	51328-03FA0	BOLT	2	
7	09250-06011	CAP	4	
8	56211-45C50	HOLDER HANDLE UPPER	2	
9	07130-08307	BOLT	4	
10	09164-08015	WASHER	4	
11	56221-03FA0	HOLDER HANDLE LOWER	2	
12	51321-03FA0	BOLT	2	
13	08319-31107	NUT	2	
14	09267-25009	BEARING (25X47X15)	1	
15	09285-34009	OIL SEAL (34X60X11.5)	1	
16	51631-28000	NUT, STEERING STEM	1	
17	51530-19F00	BRACKET, HEADLAMP HOUSING RH	1	
18	51540-19F00	BRACKET, HEADLAMP HOUSING LH	1	
19	51553-38C00	DAMPER HEADLAMP HOUSING BRKT	4	
20	51851-19F00	STAY, HEADLAMP HOUSING RH	1	
21	51861-19F00	STAY, HEADLAMP HOUSING LH	1	
22	09139-06027	SCREW (6X12)	4	
23	51356-10D03	WASHER	1	
24	51353-28A10	NUT	1	

REFER TO FIG.51A(I-4; FOR SV650SX/SY E28

FIG.51A

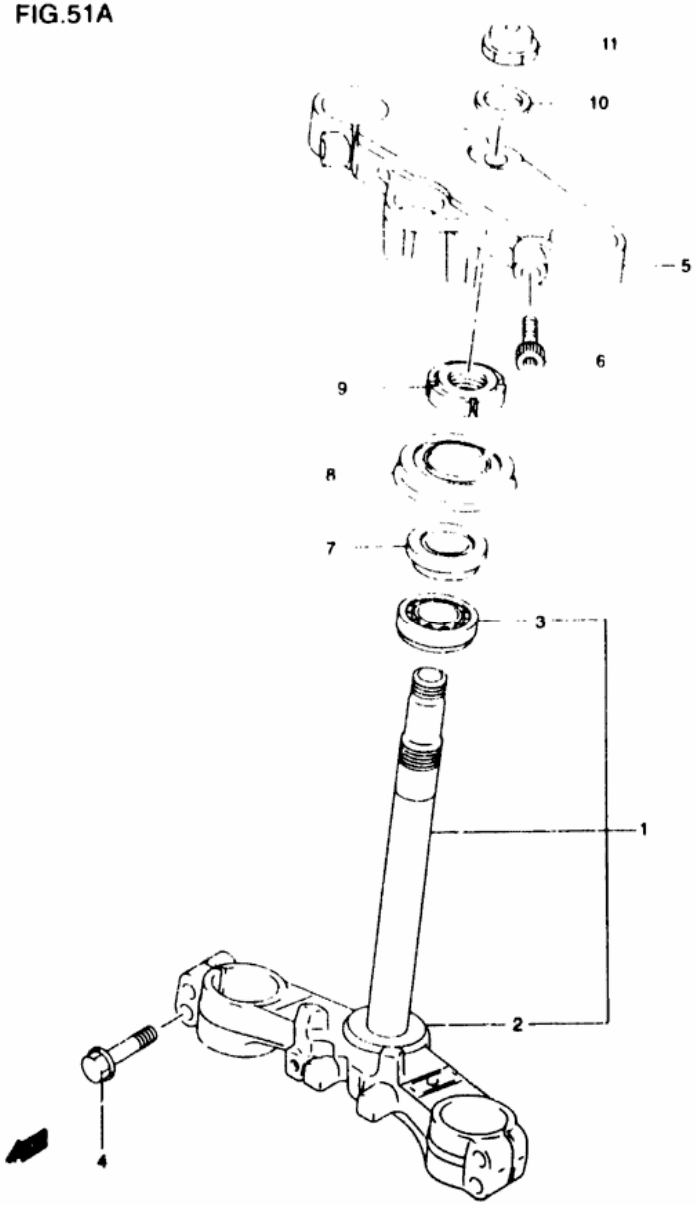

FIG 51A(1-4) STEERING STEM (SV650SX/SY E28) CANADA ONLY

REF.NO.	PART NO.	DESCRIPTION	Q'TY	REMARKS
1	51410-19F00	STEM STEERING	1	
2	51644-12C00	SEAL STEERING LOWER	1	
3	09267-30010	BEARING (30X55X17)	1	
4	01550-08407	BOLT	4	
5	51311-19F00	HEAD STEERING STEM	1	
6	51328-03FA0	BOLT	2	
7	09267-25009	BEARING (25x47x15)	1	
8	09285-34009	OIL SEAL (34x69x11.9)	1	
9	51631-28000	NUT STEERING STEM	1	
10	51356-10D03	WASHER	1	
11	51353-26A10	NUT	1	

AIR CLEANER..... C-08 CRANKCASE COVER.... B-07 FRONT BRAKE HOSE... I-07 GEAR SHIFTING..... D-12 OPTIONAL..... J-07 REAR WHEEL..... J-04 TRANSMISSION..... D-10
BATTERY..... E-04 CRANKCASE..... B-05 FRONT CALIPER..... I-06 HANDLE BAR..... H-02 RADIATOR HOSE..... D-07 SEAT TAIL COVER.... H-11 TURNSIGNAL LAMP.... F-06

FIG.56

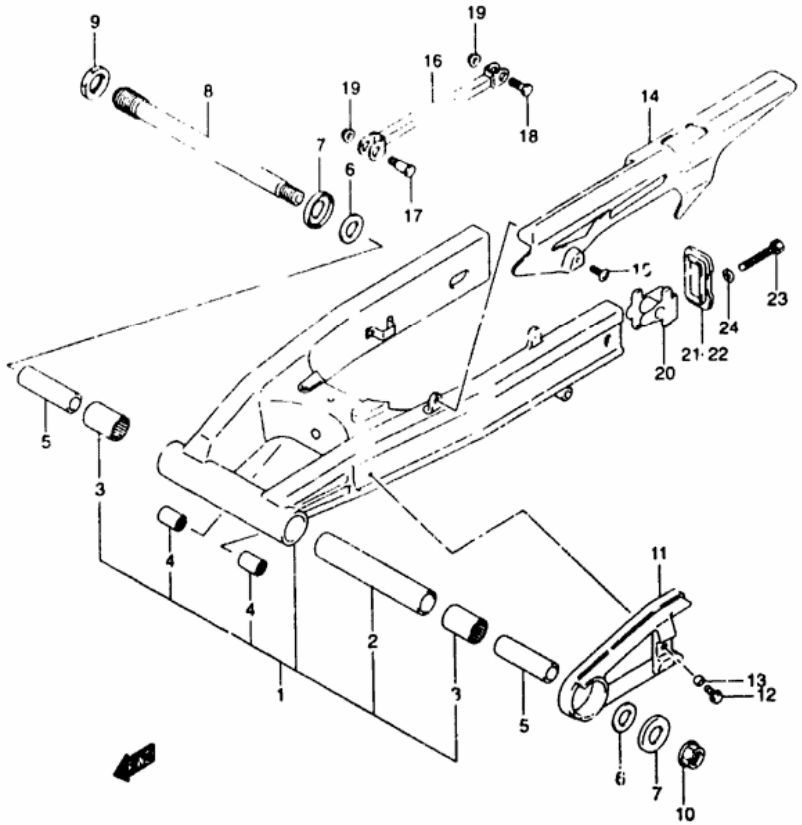

FIG.56 (J- 2) REAR SWINGING ARM

R'.F.NO.	PART NO.	DESCRIPTION	Q'TY	REMARKS
1	61000-19F11	SWINGING ARM ASSY, REAR	1	SV650X/Y
2	61281-19F00	SPACER, PIVOT CENTER	1	
3	09263-25024	BEARING, PIVOT (25X33X30)	2	
4	09263-20071	BEARING, ROD (20X27X23 5)	2	
5	61251-21E00	SPACER, PIVOT	2	
6	08211-20381	THRUST WASHER	2	
7	61262-17C00	DUST SEAL, PIVOT	2	
8	61211-19F00	SHAFT, PIVOT	1	
9	61214-19F00	NUT, PIVOT BOLT	1	
10	08319-31188	NUT	1	
11	61273-19F00	BUFFER, CHAIN TUCH DEFLECTOR	1	
12	09116-06152	BOLT (6X20)	1	
13	09180-06283	SPACER (6 5X10X7)	1	
14	61310-19F00	CASE, CHAIN	1	
15	09139-06083	SCREW (5X16)	2	
16	64310-19F00	TORQUE LINK, REAR	1	
17	09111-10051	BOLT, FRONT (10X39)	1	
18	09100-10187	BOLT, REAR (10X34)	1	
19	08319-31107	NUT	2	
20	61410-33D00	ADJUSTER, CHAIN	2	
21	61421-33D01	PLATE, ADJUSTER GUIDE RH	1	
22	61422-33D01	PLATE, ADJUSTER GUIDE LH	1	
23	09106-08119	BOLT (8X50)	2	
24	09164-08015	WASHER	2	

AIR CLEANER..... C-08 CRANKCASE COVER.... B-07 FRONT BRAKE HOSE... I-07 GEAR SHIFTING..... D-12 OPTIONAL..... J-07 REAR WHEEL..... J-04 TRANSMISSION..... D-10

FIG.29

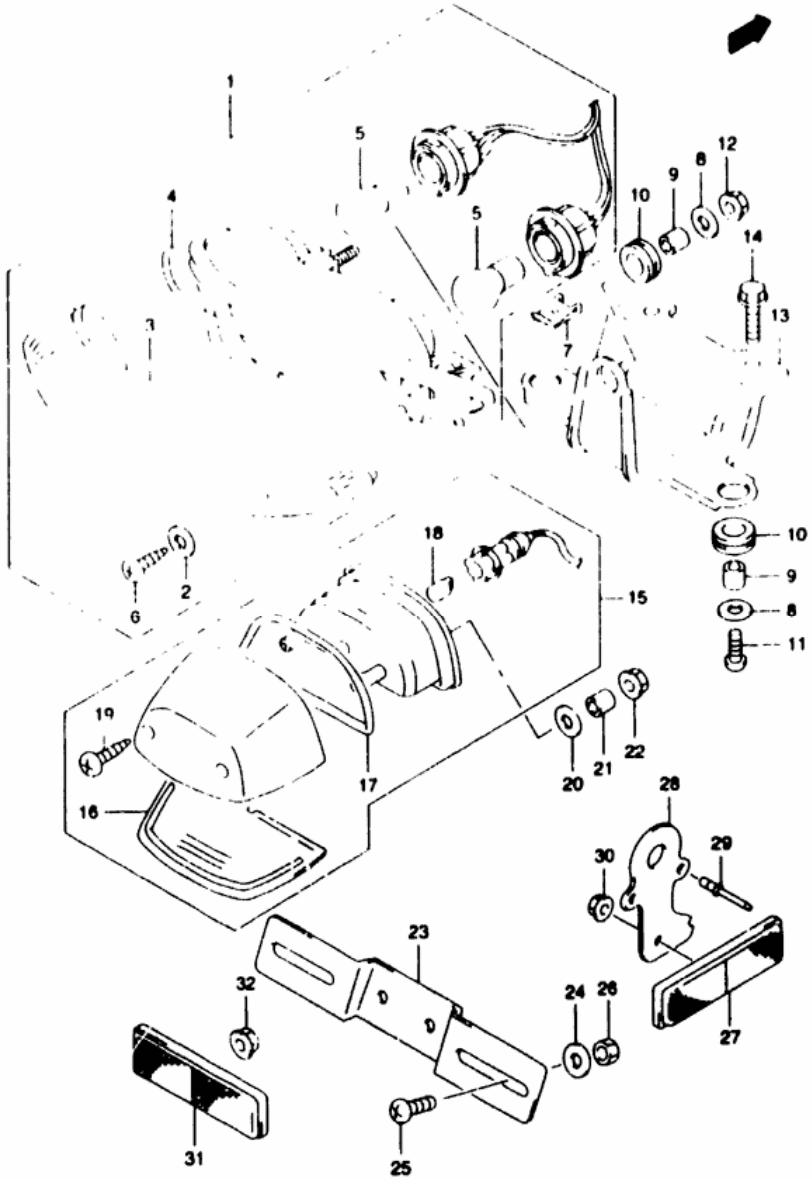

FIG 29 (F-8) TAIL LAMP

REF.NO.	PART NO.	DESCRIPTION	Q'TY	REMARKS
1	35710-02F30	LAMP ASSY, REAR COMBINATION	1	
2	35627-43010	GASKET	2	
3	35712-02F30	LENS	1	
4	35713-02F00	GASKET	1	
5	09471-12128	BULB (12V 21/5W)	1	
6	03211-04207	SCREW	2	
7	09148-05020	NUT	2	
8	09160-06088	WASHER (6.5X20X1.6)	3	
9	09180-06285	SPACER (6.5X10X9)	3	
10	09320-09007	CUSHION	3	
11	03541-05203	SCREW	2	
12	08316-10063	NUT	1	
13	35726-19F00	BRACKET, REAR COMBINATION	1	
14	01550-06123	BOLT	1	
15	35910-02F00	LAMP ASSY, LICENSE	1	
16	35912-02F00	LENS	1	
17	35913-02F00	GASKET	1	
18	09471-12081	BULB (12V 5W)	1	
19	03211-04163	SCREW	2	
20	09160-06088	WASHER (6.5X20X1.6)	2	
21	09180-05054	SPACER (5.5X9.5X11.5)	2	
22	08316-10053	NUT	2	
23	35927-48B30	BRACKET, LICENSE PLATE	1	
24	09160-06088	WASHER (6.5X20X1.6)	2	
25	02142-06123	SCREW	2	
26	08316-10063	NUT	2	
27	35970-07F00	REFLECTOR ASSY, REAR	2	
28	35975-19F00	BRACKET, REAR SIDE RR	2	
29	09229-04038	RIVET, REAR SIDE	2	
30	08310-00053	NUT, REAR SIDE	2	
31	35970-07F00	REFLEX REFLECTOR ASSY	1	
32	08316-10053	NUT, REAR	1	

AIR CLEANER..... C-08
BATTERY..... E-04
CAM CHAIN..... C-04
CRANKCASE COVER.... B-07
CRANKCASE..... B-05
CRANKSHAFT..... B-08
FRONT BRAKE HOSE... I-07
FRONT CALIPER..... I-06
FRONT CYLINDER HEAD B-02
GEAR SHIFTING..... D-12
HANDLE BAR..... H-02
HANDLE LEVER..... H-04
OPTIONAL..... J-07
RADIATOR HOSE..... D-07
RADIATOR..... D-06
REAR WHEEL..... J-04
SEAT TAIL COVER.... H-11
SEAT..... H-10
TRANSMISSION..... D-10
TURNSIGNAL LAMP.... F-06
WARNING LABEL..... H-09

FIG.28

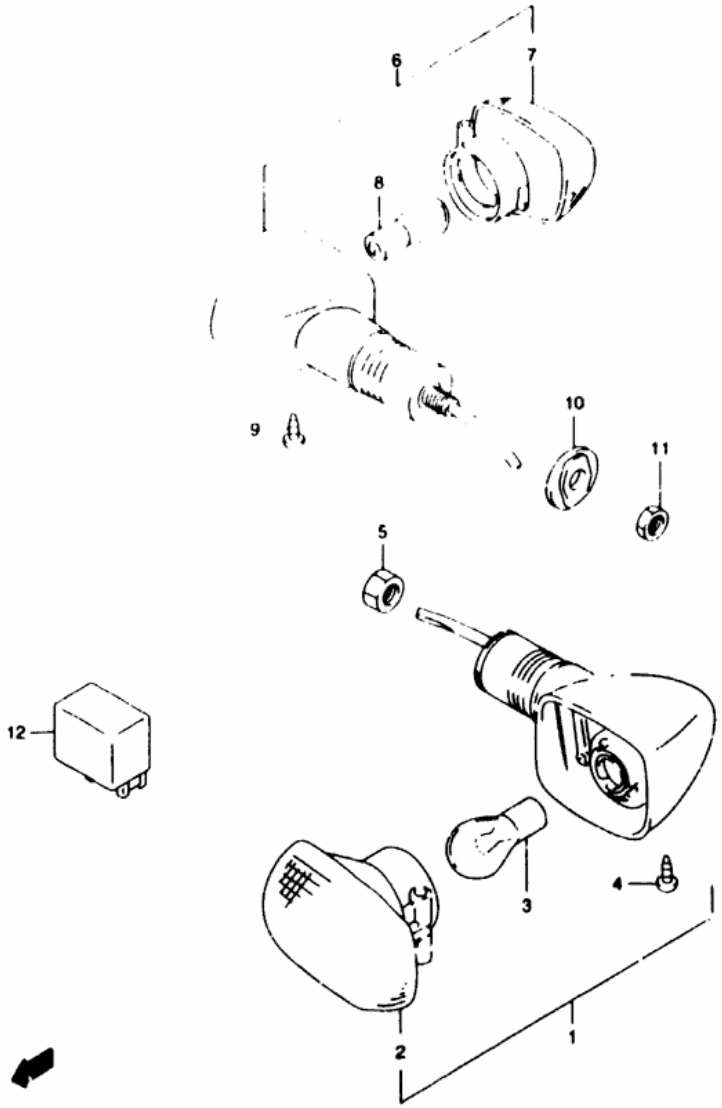

FIG 28 (F- 6) TURNSIGNAL LAMP (SV650X/Y)

REF.NO.	PART NO.	DESCRIPTION	Q'TY	REMARKS
1-1	35601-20F30	LAMP ASSY, FRONT TURNSIGNAL RH	1	
1-2	35602-20F30	LAMP ASSY FRONT TURNSIGNAL LH	1	
2	35610-33E00	LAMP UNIT	2	
3	09471-12045	BULB (12V 21W)	2	
4	03242-04123	SCREW	2	
5	08316-10103	NUT	2	
6-1	35603-33E10	LAMP ASSY REAR TURNSIGNAL RH	1	
6-2	35604-33E10	LAMP ASSY REAR TURNSIGNAL LH	1	
7	35610-33E00	LAMP UNIT	2	
8	09471-12045	BULB (12V 21W)	2	
9	03242-04123	SCREW	2	
10	35695-17C00	SPACER REAR TURNSIGNAL	2	
11	08310-00103	NUT	2	
12	38610-03F00	RELAY ASSY TURNSIGNAL LAMP	1	

REFER TO FIG 28A(F-7) FOR SV650SX/SY E28

AIR CLEANER..... C-08
BATTERY..... E-04
CAM CHAIN..... C-04
CRANKCASE COVER.... B-07
CRANKCASE..... B-05
CRANKSHAFT..... B-08
FRONT BRAKE HOSE... I-07
FRONT CALIPER..... I-06
FRONT CYLINDER HEAD B-02
GEAR SHIFTING..... D-12
HANDLE BAR..... H-02
HANDLE LEVER..... H-04
OPTIONAL..... J-07
RADIATOR HOSE..... D-07
RADIATOR..... D-06
REAR WHEEL..... J-04
SEAT TAIL COVER.... H-11
SEAT..... H-10
TRANSMISSION..... D-10
TURNSIGNAL LAMP.... F-06
WARNING LABEL..... H-09

FIG.28A

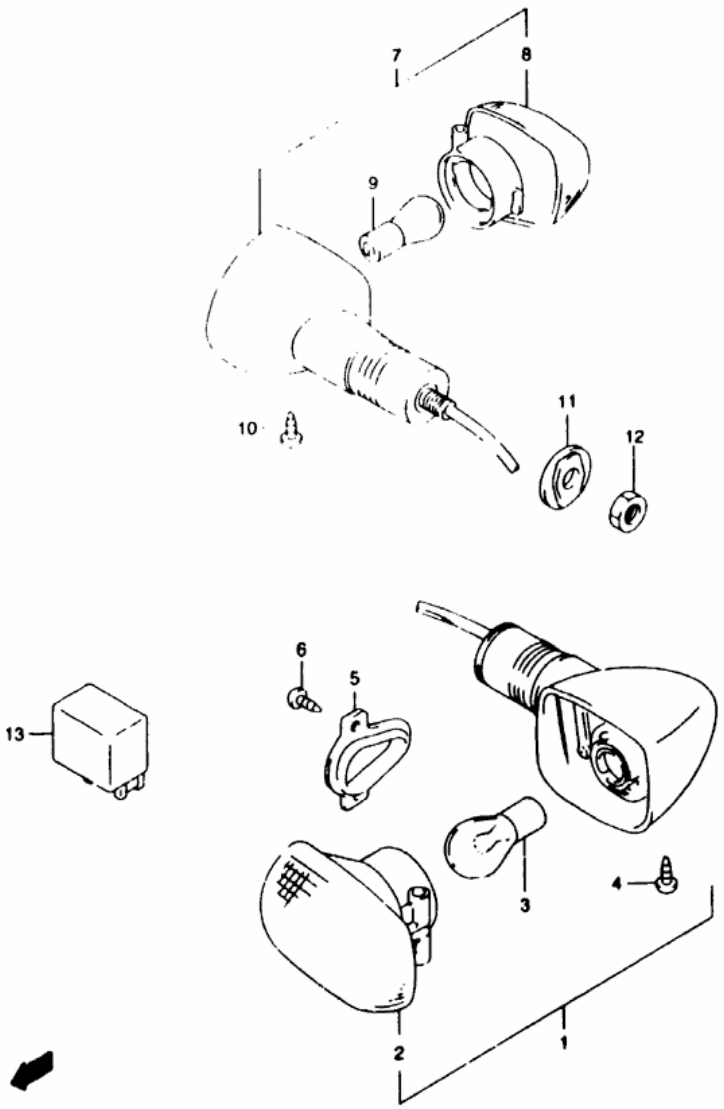

FIG.28A(F-7) TURNSIGNAL LAMP (SV650SX/SY E28)

REF.NO.	PART NO.	DESCRIPTION	Q'TY	REMARKS
1-1	35601-33E30	LAMP ASSY FRONT TURNSIGNAL RH	1	
1-2	35602-33E30	LAMP ASSY. FRONT TURNSIGNAL LH	1	
2	35610-33E00	LAMP UNIT	2	
3	09471-12045	BULB (12V.21W)	2	
4	03242-04123	SCREW	2	
5	35629-33E00	PLATE FRONT TURNSIGNAL LAMP	2	
6	03511-05103	SCREW	4	
7-1	35603-33E10	LAMP ASSY REAR TURNSIGNAL RH	1	
7-2	35604-33E10	LAMP ASSY REAR TURNSIGNAL LH	1	
8	35610-33E00	LAMP UNIT	2	
9	09471-12045	BULB (12V 21W)	2	
10	03242-04123	SCREW	2	
11	35695-17C00	SPACER REAR TURNSIGNAL	2	
12	08310-00103	NUT	2	
13	38610-03F00	RELAY ASSY TURNSIGNAL LAMP	1	

FIG.20

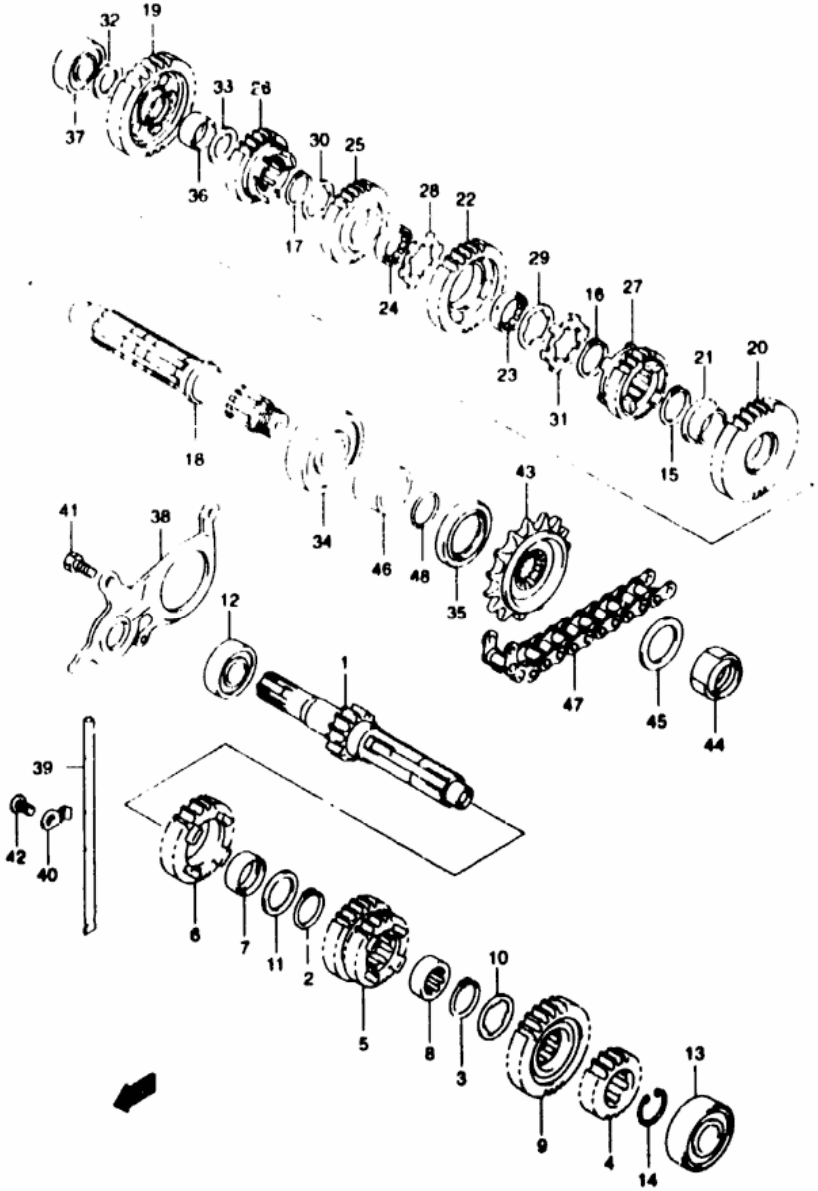

FIG 20 (D-10) TRANSMISSION

REF.NO.	PART NO.	DESCRIPTION	Q'TY	REMARKS
1	24120-19F00	SHAFT, COUNTER (NT 13)	1	
2	24127-19F00	CIRCLIP, 5TH DRIVE GEAR	1	
3	24127-19F00	CIRCLIP, 6TH DRIVE GEAR	1	
4	24221-20F00	GEAR, 2ND DRIVE (NT 18)	1	
5	24231-20F00	GEAR, 3RD & 4TH DRIVE (NT 21/24)	1	
6	24251-20F01	GEAR, 5TH DRIVE (NT 26)	1	
7	24252-19F00	BUSH 5TH DRIVE	1	
8	24252-38A10	BUSH 6TH DRIVE	1	
9	24261-20F00	GEAR 6TH DRIVE (NT 27)	1	
10	09167-25021	WASHER 6TH DRIVE	1	25.1x33X1.0
11	09181-25167	WASHER 5TH DRIVE	1	
12	09262-17046	BEARING CNTR SHAFT LH	1	17x40x12
13	09262-20116	BEARING CNTR SHAFT RH	1	20x52x15
14	09380-25012	RING 2ND DRIVE	1	
15	24127-19F00	CIRCLIP 2ND DRIVEN	1	
16	24127-19F00	CIRCLIP 3RD DRIVEN	1	
17	24127-19F00	CIRCLIP 4TH DRIVEN	1	
18	24130-19F01	SHAFT DRIVE	1	
19	24311-20F00	GEAR, 1ST DRIVEN (NT 32)	1	
20	24321-20F00	GEAR, 2ND DRIVEN (NT 32)	1	
21	24322-19F00	BUSH, 2ND DRIVEN	1	
22	24331-20F00	GEAR, 3RD DRIVEN (NT 29)	1	
23	24332-24510	BUSH, 3RD DRIVEN	1	
24	24332-24510	BUSH 4TH DRIVEN	1	
25	24341-20F00	GEAR, 4TH DRIVEN (NT 27)	1	
26	24351-20F01	GEAR, 5TH DRIVEN (NT 25)	1	
27	24361-20F00	GEAR 6TH DRIVEN (NT 23)	1	
28	09167-25013	LOCK WASHER, 3RD DRIVEN	1	
29	09167-25021	WASHER, 3RD DRIVEN	1	
30	09167-25021	WASHER, 4TH DRIVEN	1	
31	09169-25001	WASHER 3RD DRIVEN LOCK	1	
32	09181-17195	WASHER, 1ST DRIVEN	1	17X29X1.0
33	09181-20195	WASHER, 1ST DRIVEN	1	20X30X1.0

FIG.20

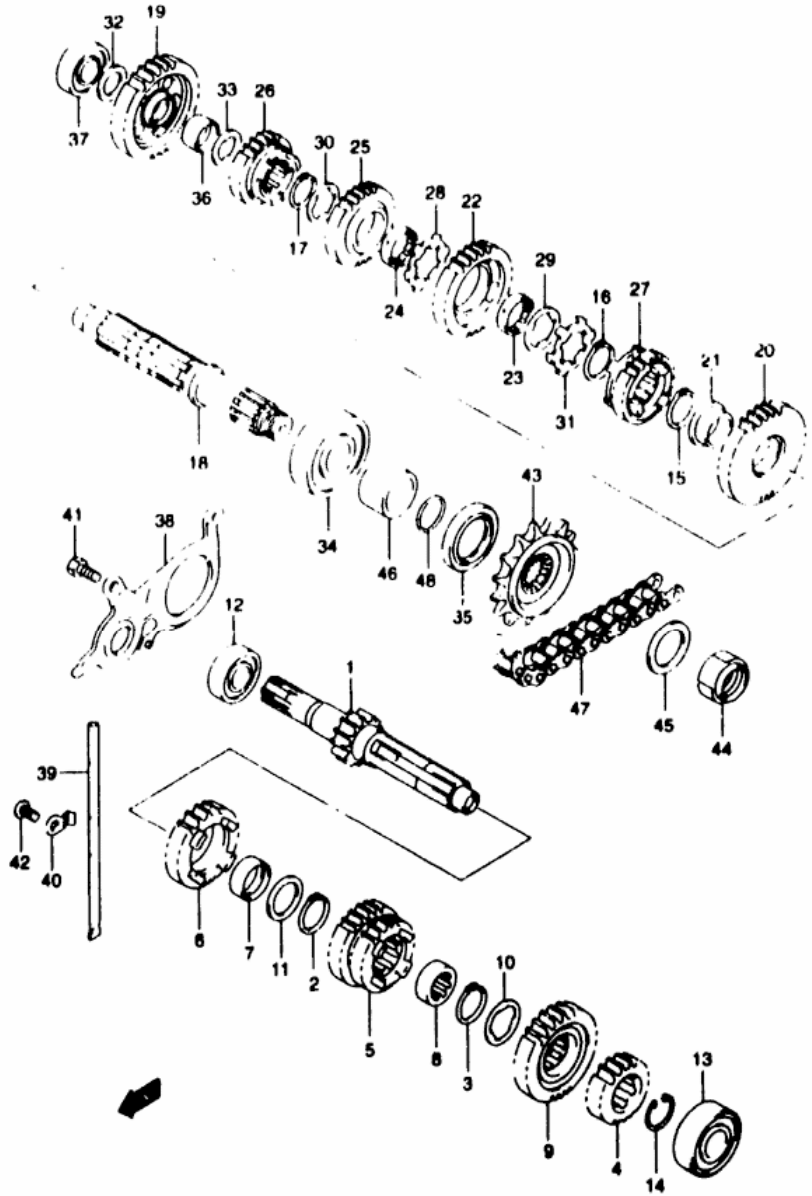

FIG 20 (D-11) TRANSMISSION

REF.NO.	PART NO.	DESCRIPTION	Q'TY	REMARKS
34	09262-25125	BEARING, DRIVE SHAFT LH	1	25X62X17
35	09283-36003	SEAL, DRIVE SHAFT	1	36X50X6
36	09300-20032	BUSH, 1ST DRIVEN	1	
37	09262-17023	BEARING, DRIVE SHAFT RH	1	17X40X12
38	24751-19F00	RETAINER, DRIVE SHAFT OIL SEAL	1	
39	24881-12C20	GUIDE, T/M OIL	1	
40	24885-12C10	RETAINER, TRANSMISSION OIL	1	
41	01500-06123	BOLT	3	
42	02112-06123	SCREW	1	
43	27510-20F00	SPROCKET, ENGINE (NT 15)	1	
44	09159-20004	NUT, ENGINE SPROCKET	1	
45	09167-25019	WASHER, ENGINE SPROCKET	1	
46	27531-19F00	SPACER, ENGINE SPROCKET	1	
47-1	27600-32C10-110	CHAIN ASSY (DID525V9 110LE)	1	SV650X
47-2	27600-32C10-108	CHAIN ASSY (DID525V9 108LE)	1	SV650SX E28
48	09280-24010	O RING (ID 2.4 ID 23.7)	1	

AIR CLEANER..... C-02
BATTERY..... E-04
CAM CHAIN..... C-04
CRANKCASE COVER.... B-07
CRANKCASE..... B-05
CRANKSHAFT..... B-08
FRONT BRAKE HOSE... I-07
FRONT CALIPER..... I-06
FRONT CYLINDER HEAD B-02
GEAR SHIFTING..... D-12
HANDLE BAR..... H-02
HANDLE LEVER..... H-04
OPTIONAL..... J-07
RADIATOR HOSE..... D-07
RADIATOR..... D-06
REAR WHEEL..... J-04
SEAT TAIL COVER.... H-11
SEAT..... H-10
TRANSMISSION..... D-10
TURNSIGNAL LAMP.... F-06
WARNING LABEL..... H-09

FIG.30

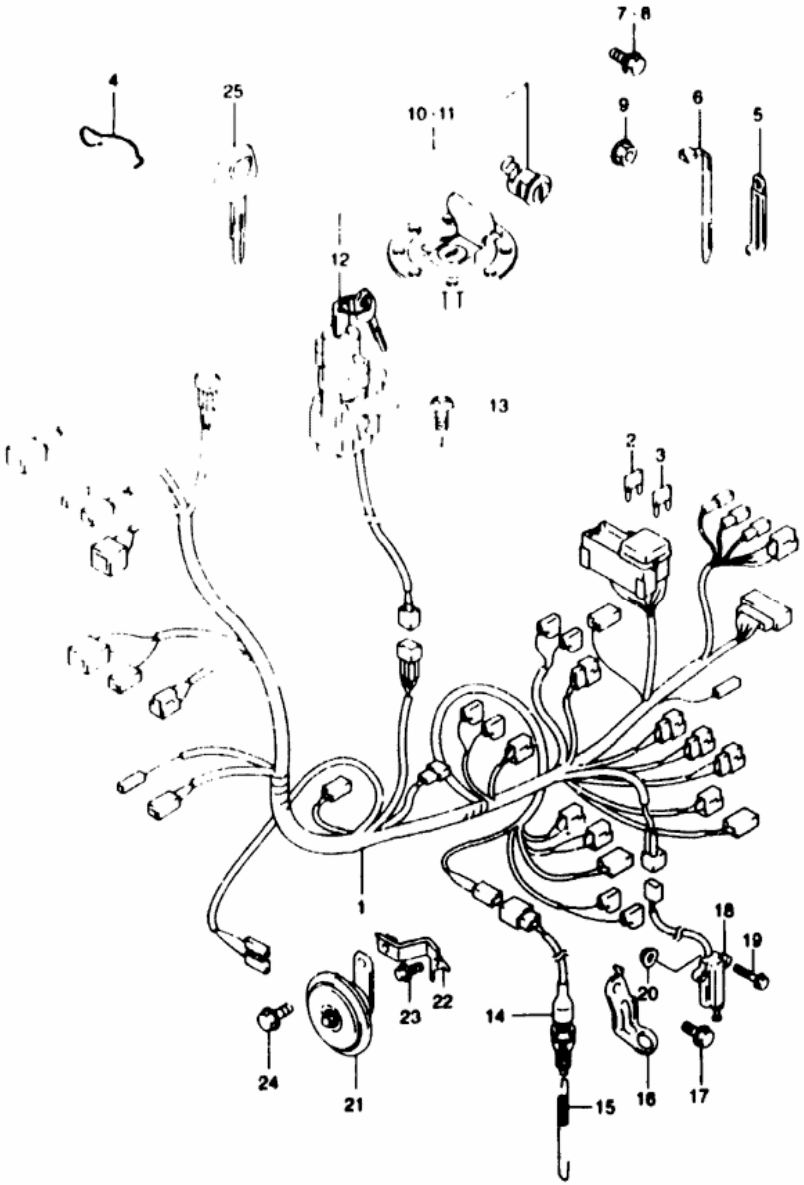

FIG 30 (F- 9) WIRING HARNESS (SV650X/Y)

REF.NO.	PART NO.	DESCRIPTION	Q'TY	REMARKS
1	36610-20F10	HARNESS, WIRING NO 1	1	
2	09481-10501	FUSE (10A)	2	
3	09481-15501	FUSE (15A)	3	
4	36619-20F00	GUIDE WIRING HARNESS	1	
5-1	09404-06432	CLAMP (L 80)	4	
5-2	09404-06435	CLAMP (L 135)	1	
5-3	09404-08207	CLAMP (L 97)	4	
6-1	09407-14403	CLAMP (L 125)	5	
6-2	09407-18402	CLAMP (L 165)	4	
7	01550-06123	BOLT WIRING HARNESS	2	
8	01550-08253	BOLT WIRING HARNESS	1	
9	08316-10083	NUT WIRING HARNESS	1	
10	37101-19830	LOCK SET	1	
11	37101-19840	LOCK SET	1	E33
12	37100-19F00	LOCK ASSY STEERING	1	
13	09139-08016	BOLT (8X20)	2	
14	37740-31D00	SWITCH ASSY STOP LAMP	1	
15	09443-06005	SPRING	1	
16	43251-19F10	BRACKET STOP LAMP SWITCH	1	
17	01550-06123	BOLT	1	
18	37840-19F00	SWITCH ASSY SIDE STAND	1	
19	37849-19F00	BOLT	2	
20	08316-10063	NUT	1	
21	38500-02F60	HORN ASSY	1	
22	38590-19F00	BRACKET, HORN	1	
23	01550-06123	BOLT	1	
24	01550-08123	BOLT	1	
25	37146-33E00	KEY BLANK	1	OPT

REFER TO FIG 30A(F-10) FOR SV650SX/SY E28

FIG.30A

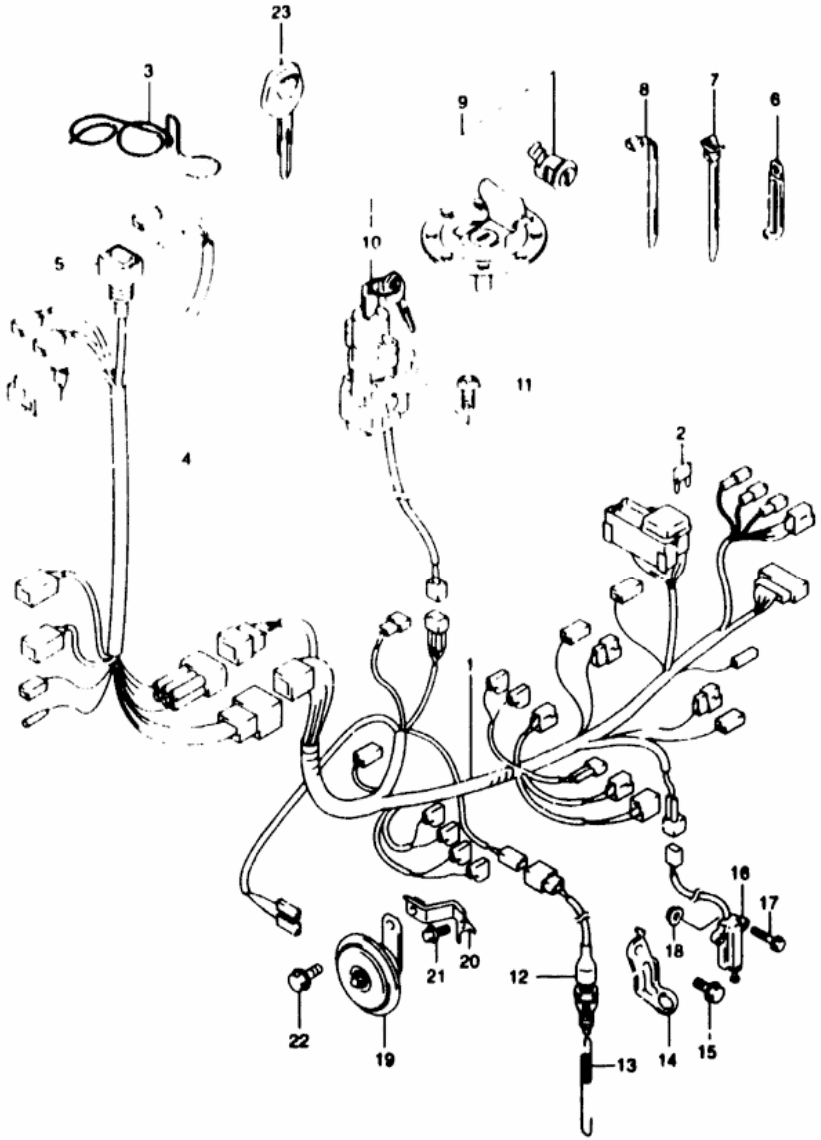

FIG 30A(F-10) WIRING HARNESS (SV650SX/SY E28)

REF.NO.	PART NO.	DESCRIPTION	Q'TY	REMARKS
1	36610-19F00	HARNESS, WIRING NO 1	1	
2-1	09481-10501	FUSE (10A)	2	
2-2	09481-15501	FUSE (15A)	3	
3	36619 33E00	GUIDE WIRING HARNESS	1	
4	36620-19F10	HARNESS WIRING NO 2	1	
5	36618-33E00	COVER SPEEDOMETER COUPLER	1	
6-1	09404-06432	CLAMP (L 80)	3	
6-2	09404-06435	CLAMP (L 135)	1	
7	09407-11402	CLAMP (L 90)	2	
8-1	09407-14403	CLAMP (L 125)	5	
8-2	09407-18402	CLAMP (L 165)	5	
9	37101-19830	LOCK SET	1	
10	37100 19F00	LOCK ASSY STEERING	1	
11	09139-08016	BOLT 8x20	2	
12	37740 31D00	SWITCH ASSY STOP LAMP	1	
13	09443-06005	SPRING	1	
14	43251-19F00	BRACKET STOP LAMP SWITCH	1	
15	01550-06123	BOLT	1	
16	37840-19F00	SWITCH ASSY SIDE STAND	1	
17	37849-19F00	BOLT	2	
18	08316-10063	NUT	1	
19	38500-02F60	HORN ASSY	1	
20	38590-19F00	BRACKET HORN	1	
21	01550-06123	BOLT	1	
22	01550-08123	BOLT	1	
23	37146-33E00	KEY, BLANK	1	OPT

AIR CLEANER..... C-08
BATTERY..... E-04
CRANKCASE COVER.... B-07
CRANKCASE..... B-05
FRONT BRAKE HOSE... I-07
FRONT CALIPER..... I-06
GEAR SHIFTING..... D-12
HANDLE BAR..... H-02
OPTIONAL..... J-07
RADIATOR HOSE..... D-07
REAR WHEEL..... J-04
SEAT TAIL COVER.... H-11
TRANSMISSION..... D-10
TURNSIGNAL LAMP.... F-06

FIG.15

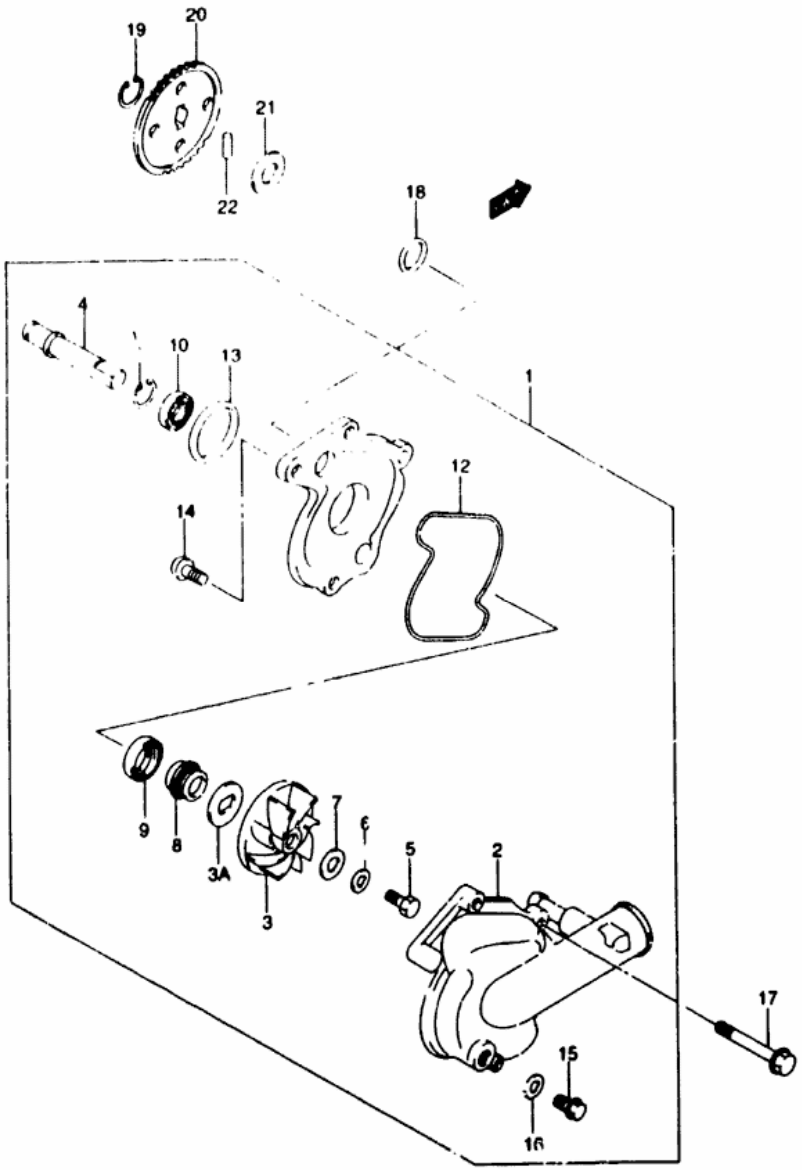

FIG.15 (D-4) WATER PUMP (MODEL X)

REF.NO.	PART NO.	DESCRIPTION	Q'TY	REMARKS
1	17400-19F02	PUMP ASSY, WATER	1	
2	17411-19F00	CASE, WATER PUMP	1	
3	17491-19F01	IMPELLER, WATER PUMP	1	
3A	17533-02F00	WASHER, IMPELLER	1	
4	17511-19F00	SHAFT WATER PUMP	1	
5	09100-06162	BOLT (6X13)	1	
6	09164-06006	LOCK WASHER	1	
7	09168-06025	GASKET (6X15X2 2)	1	
8	17470-02F10	SEAL, MECHANICAL	1	
9	09283-10004	OIL SEAL (10X21X5)	1	
10	09262-10014	BEARING (10X26X8)	1	
11	08332-11086	E RING	1	
12	17418-19F00	O RING	1	
13	17435-33400	O RING	1	
14	02112-06163	SCREW	2	
15	17415-14300	BOLT DRAIN	1	
16	09168-08008	GASKET (8 2X14X1)	1	
17	09103-06206	BOLT	3	
18	09280-22001	O RING (D 2 4 ID 21 8)	2	
19	08331-31106	CIRCLIP	1	
20	17461-19F00	GEAR, WATER PUMP DRIVEN	1	
21	09181-10159	SHIM	1	
22	09261-04002	ROLLER	1	

REFER TO FIG 15A(D-5) FOR MODEL Y

AIR CLEANER..... C-08 CRANKCASE COVER.... B-07 FRONT BRAKE HOSE... I-07 GEAR SHIFTING..... D-1 OPTIONAL..... J-07 REAR WHEEL..... J-04 TRANSMISSION..... D-10
BATTERY..... E-04 CRANKCASE..... B-05 FRONT CALIPER..... I-06 HANDLE BAR..... H-02 RADIATOR HOSE..... D-07 SEAT TAIL COVER.... H-11 TURNSIGNAL LAMP.... F-06

FIG.15A

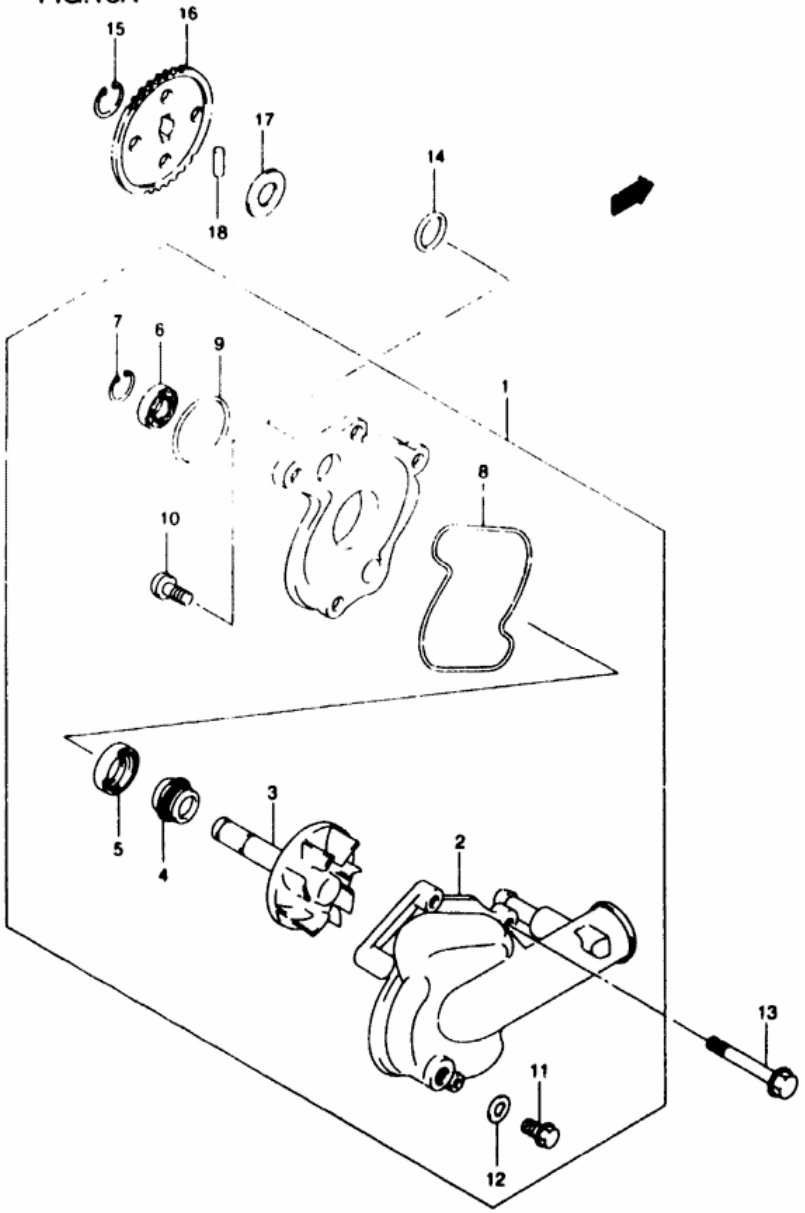

FIG 15A(D- 5) WATER PUMP (MODEL Y)

REF.NO.	PART NO.	DESCRIPTION	Q'TY	REMARKS
1	17400-19F10	PUMP ASSY. WATER	1	
2	17411-19F00	CASE, WATER PUMP	1	
3	17491-19F10	IMPELLER/SHAFT	1	
4	17470-02F10	SEAL, MECHANICA'	1	
5	09283-10004	OIL SEAL (10X21X5)	1	
6	09262-10014	BEARING (10X26X8)	1	
7	08332-11086	E RING	1	
8	17418-19F00	O RING	1	
9	17435-33400	O RING	1	
10	02112-06163	SCREW	2	
11	17415-14300	BOLT DRAIN	1	
12	09168-08008	GASKET (8.2×14×1)	1	
13	09103-06206	BOLT	3	
14	09280-22001	O RING (ID 24 ID 21.8)	2	
15	08331-31106	CIRCLIP	1	
16	17461-19F00	GEAR WATER PUMP DRIVEN	1	
17	09181 10158	SHIM	1	
18	09261-04002	ROLLER	1	

AIR CLEANER..... C-08
BATTERY..... E-04
CAM CHAIN..... C-04
CAM SHAFT / VALVE.. C-03
CARBURETOR FITTINGS C-07
CRANKCASE COVER.... B-07
CRANKCASE..... B-05
CRANKSHAFT..... B-08
CYLINDER..... B-04
ELECTRICAL E-05
FRONT BRAKE HOSE... I-07
FRONT CALIPER..... I-06
FRONT CYLINDER HEAD B-02
FRONT FENDER..... G-11
FRONT FORK DAMPER I-02
GEAR SHIFTING..... D-12
HANDLE BAR..... H-02
HANDLE LEVER..... H-04
HANDLE SWITCH..... F-11
HEADLAMP HOUSING G-10
OPTIONAL..... J-07
RADIATOR HOSE..... D-07
RADIATOR..... D-06
REAR CALIPER..... J-05
REAR CUSHION LEVER. J-03
REAR WHEEL..... J-04
SEAT TAIL COVER.... H-11
SEAT..... H-10
SPEEDOMETER..... F-02
STAND..... G-03
TRANSMISSION..... D-10
TURNSIGNAL LAMP.... F-06
WARNING LABEL..... H-09
WATER PUMP..... D-04
WIRING HARNESS..... F-09

FIG.18

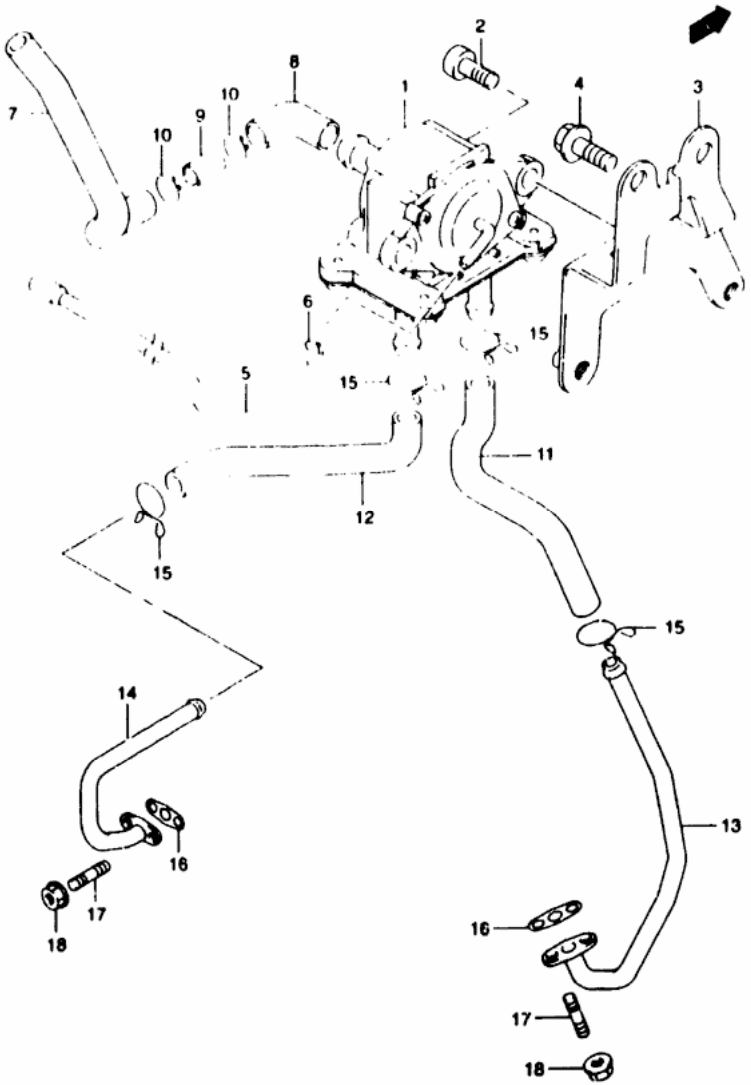

FIG 18 (D-8) 2ND AIR (E33)

REF.NO.	PART NO.	DESCRIPTION	Q'TY	REMARKS
1	18450-20F00	VALVE ASSY. 2ND AIR	1	
2	07130-06163	BOLT. 2ND AIR VALVE	2	
3	18610-20F00	BRACKET. 2ND AIR VALVE	1	
4	02162-06163	BOLT 2ND AIR BRACKET	1	
5	09359-40701-600	HOSE 2ND AIR VACUUM	1	L 600 φ270
6	09401-06101	CLIP	1	
7	18711-20F00	HOSE 2ND AIR CLEANER	1	
8	18712-21F00	HOSE 2ND AIR CLEANER JOINT	1	
9	13888-19B00	JOINT 2ND AIR CLEANER HOSE	1	
10	09401-15101	CLIP	4	
11	18461-20[illegible]0	HOSE 2ND AIR VALVE FRONT	1	
12	18471-20F00	HOSE 2ND AIR VALVE REAR	1	
13	18410-20F00	PIPE 2ND AIR FRONT	1	
14	18420-20F00	PIPE 2ND AIR REAR	1	
15	09401-13409	CLIP	4	
16	18441-45C00	GASKET 2ND AIR PIPE	2	
17	01421-06163	BOLT STUD	4	
18	08316-10063	NUT	4	

AIR CLEANER..... C-08 CRANKCASE COVER.... B-07 FRONT BRAKE HOSE... I-07 GEAR SHIFTING..... D-12 OPTIONAL..... J-07 REAR WHEEL..... J-04 TRANSMISSION..... D-10
BATTERY..... E-04 CRANKCASE..... B-05 FRONT CALIPER..... I-04 HANDLE BAR..... H-02 RADIATOR HOSE..... D-07 SEAT TAIL COVER.... H-11 TURNSIGNAL LAMP.... F-06